March 22, 1927. 1,621,511

A. J. KEMPIEN

FOUL INDICATOR FOR BOWLING ALLEYS

Filed Sept. 22, 1919

Fig. 1.

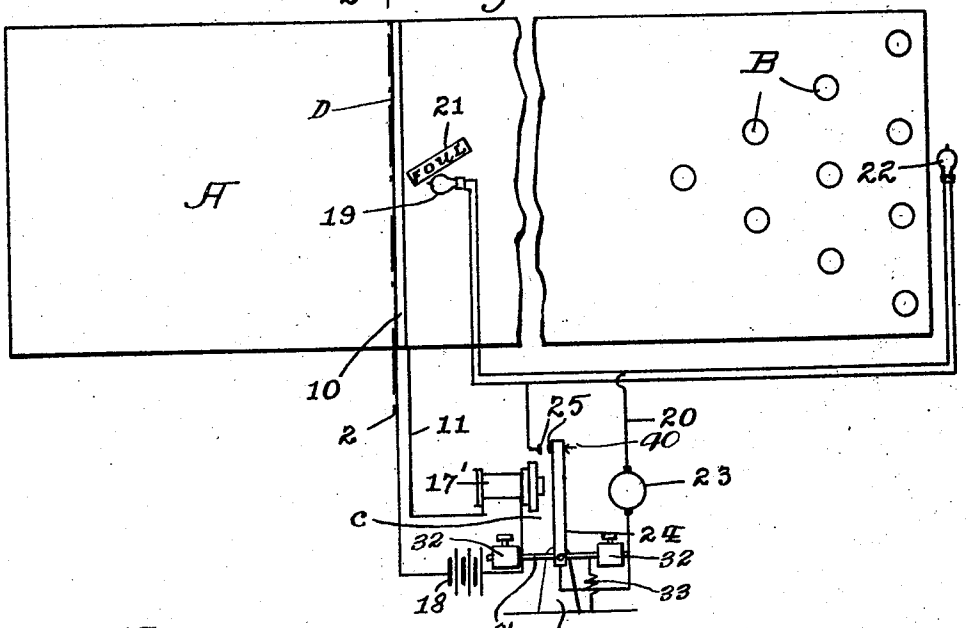

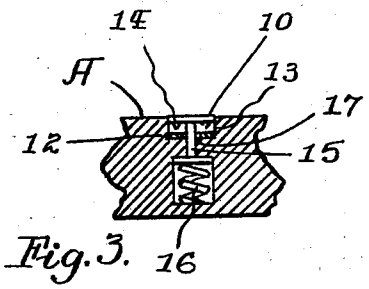

Fig. 3.

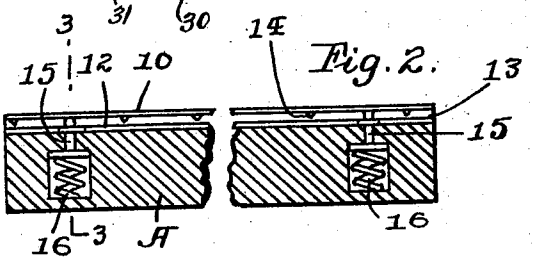

Fig. 2.

Inventor:
August J. Kempien,
by: Bradbury & Carroll
Attorneys.

Patented Mar. 22, 1927. 1,621,511

UNITED STATES PATENT OFFICE.

AUGUST J. KEMPIEN, OF ST. PAUL, MINNESOTA.

FOUL INDICATOR FOR BOWLING ALLEYS.

Application filed September 22, 1915. Serial No. 325,548.

My invention relates to improvement in foul line indicators for bowling alleys and has for its object to provide a device which is adapted to become operative for indicating when the foot of a bowler passes over the foul line of the alley and which remains inoperative during the passage of a bowling ball over the same.

In carrying out my objects, I employ an electrical circuit which has connected in it a switch positioned at the foul line of the bowling alley and a relay, the circuit of which is connected to a suitable signaling device. In addition, I provide the armature of said relay with adjustable weights whereby the movement of said armature toward the relay coils is sufficiently retarded to prevent the relay circuit from closing and actuating the signal, when the ball passes over the foul line switch.

The full objects and advantages of my invention will appear in connection with the detailed description thereof and are particularly pointed out in the claims.

In the drawings forming part of this specification:

Fig. 1 is a plan view of a bowling alley showing my invention in diagrammatic form, installed therein.

Fig. 2 is a sectional detail view, taken on line 2—2 of Fig. 1, drawn to an enlarged scale.

Fig. 3 is a sectional view taken on line 3—3 of Fig. 2.

My invention is best shown in Fig. 1, as applied to an ordinary bowling alley, indicated in its entirety at A, which is provided with the usual pins B, set up in the ordinary manner. At the player's end of the bowling alley, I employ a switch D, which extends completely across the bowling alley at the foul line thereof. This switch is directly connected to an electrical circuit 11 which switch is connected in series with a battery 18 and a relay C. A relay circuit 21 controlled by relay C is connected with a source of electrical energy 23 and with two signalling devices 19 and 22 which may be positioned, one at the pin setter's end of the alley and the other at the player's end of the alley, as desired, so that the player and pin setter may be simultaneously advised when a foul has been committed. If desired a sign 21 with the words "Foul" printed on it, may be positioned adjacent the signal 19.

The construction of the switch D is brought out in detail in Figs. 2 and 3. A slot 13 is cut directly across the bowling alley floor extending completely across the same, at the foul line thereof. Within this slot is positioned a plate 12 which lies along the bottom of the said slot. Immediately above the plate 12 is positioned a metal strip 10 which is provided with downwardly extending contact points 14, adapted to come in contact with plate 12 when the said strip is depressed. For supporting the strip 10, a number of plungers 15 are employed, which are rigidly attached thereto and which pass freely through openings 17 formed in the said plate 12 and which engage compression coil springs positioned within the floor of the alley, below the slot 13. With this construction, the said strip 10 may be held normally positioned a slight amount above the surface of the floor, with the contact points 14 normally free from plate 12. When the bowling ball or the foot of a player crosses the foul line the strip 10 is depressed, thereby making contact with the plate 12. It can readily be comprehended however that when the bowling ball passes over the switch D, depressing strip 10, that the contact between the contact point 14 and the plate 12 is only momentary, while when the foot of the player engages the said switch, the said contact is held closed for a greater period of time. A circuit 11 is connected to the strip 10 and plate 12 so that the same becomes closed when the strip 10 is depressed.

The relay C as best shown in Fig. 1 comprises a coil 17′ which is connected in series with a battery 18 and the switch D in the circuit 11. This relay further comprises an armature 24 which is pivotally mounted upon a base 30 and is adapted to oscillate toward and away from the magnet 17′ as the same is energized and deenergized. At the upper end of armature 24, I provide two contact points 25 which form a circuit closing device for the circuit 20, one of the leads of the said circuit being directly connected to one of the contact points 25, and the other of the leads of said circuit being connected to the armature 24. As the armature 24 is attracted by magnet 17′ contact points 25 are caused to make contact and to close the circuit 20 so as to actuate the signals 20 and 22.

For rendering the signal inoperative upon the passage of a bowling ball over the same,

I retard the movement of the armature 24 so that the time required for causing the said armature to become attracted by the magnet 17′ is considerably greater than with the ordinary relay. This has the effect of preventing the said armature from being attracted by the magnet 17′ when the bowling ball momentarily closes the switch D. For retarding said movement I employ a lever 31 which is rigidly attached to the armature 24. This lever is arranged to project outwardly beyond the said armature on both sides thereof. Upon the ends of the said lever are slidably mounted weights 32 which may be adjustably positioned along the said lever. A tension coil spring 33 is secured to the lever 31 on one side thereof and serves to hold the said armature 24 away from the coil of the magnet 17′. The movement of the same may be terminated by a stop 40 diagrammatically shown in Fig. 1. It can readily be seen that with this structure that when the bowling ball momentarily closes the switch D and completes the circuit 11, that the armature 24 due to the inertia of the same, formed by weights 32 will not become attracted by the said magnet 17′ and hence will not cause the circuit 20 to actuate the signals 19 and 22. On the other hand when the foot of a player depresses the switch member 10, the time elapsing before the player's foot can be removed is sufficient to permit the magnet 17′ to attract the armature 24 overcoming the inertia of the weights 32, thereby bringing the contact point 25 in contact, and causing the circuit 20 to actuate the signals 19 and 22.

The advantages of my invention are apparent. A device is provided which is adapted to indicate when a technical foul has been committed by the player. This device is positive in action and exceedingly simple in construction and may be adjusted to remain inoperative for a minimum rate of speed at which bowling balls would traverse the foul line of the alley.

In accordance with the patent statutes, I have described the principles of operation of my invention, together with the apparatus which I now consider to represent the best embodiment thereof, but I desire to have it understood that the construction shown is only illustrative and that the invention can be carried out by other means and applied to uses other than those above set forth within the scope of the following claims.

I claim:

1. A foul indicator comprising a signal device, means for operating said signal device, including a member positioned in the floor of the bowling alley, a circuit including a magnet with its armature controlled thereby and a weighted member carried by the pivot of said armature to create a high moment of inertia whereby the signal device is inoperative upon a momentary actuation of said floor member.

2. A foul indicator comprising an electrical signal device, a normally open circuit for operating said signal device, a magnet having a pivoted armature for closing said signal circuit, a normally open circuit for operating said magnet, circuit closing means positioned in the floor of the bowling alley for closing said magnet circuit and means in relation to the pivot of said armature to cause a high moment of inertia for holding said armature from movement upon momentarily closing said floor circuit closing device.

3. A foul indicator comprising an electrical signal device, a normally open circuit for operating said signal device, a magnet having an armature for closing said signal circuit normally holding said signal circuit open, a normally open circuit for operating said magnet, circuit closing means positioned in the floor of the bowling alley for closing said magnet circuit, an arm secured to said armature and a weight adjustably positioned on said arm for holding said armature from movement upon momentarily closing said floor circuit closing device.

4. A foul indicator comprising a signaling device, a relay having a magnet, an armature, a circuit connected with said magnet, a circuit closing device for closing said magnet circuit, a circuit connected with said armature and signal, an arm connected with said armature, and an adjustable weighted member positioned upon said arm.

5. A foul indicator comprising an electrical signal device, a normally open circuit for operating said signal device, a magnet having an armature for closing said signal circuit normally holding said signal circuit open, a normally open circuit for operating said magnet, circuit closing means positioned in the floor of the bowling alley for closing said magnet circuit, an arm secured to said armature and projecting on each side thereof, and a pair of weights adjustably positioned upon the ends of said arm for holding said arm from movement upon momentarily closing said circuit device.

Signed at St. Paul, in the county of Ramsey and State of Minnesota, this 18th day of September, 1919.

AUGUST J. KEMPIEN.