July 3, 1956 E. R. WILES ET AL 2,753,275

METHOD OF CONTINUOUSLY COATING PAPER WITH WAX AND RESULTANT PRODUCT

Filed Feb. 5, 1952 2 Sheets-Sheet 1

Fig. 1

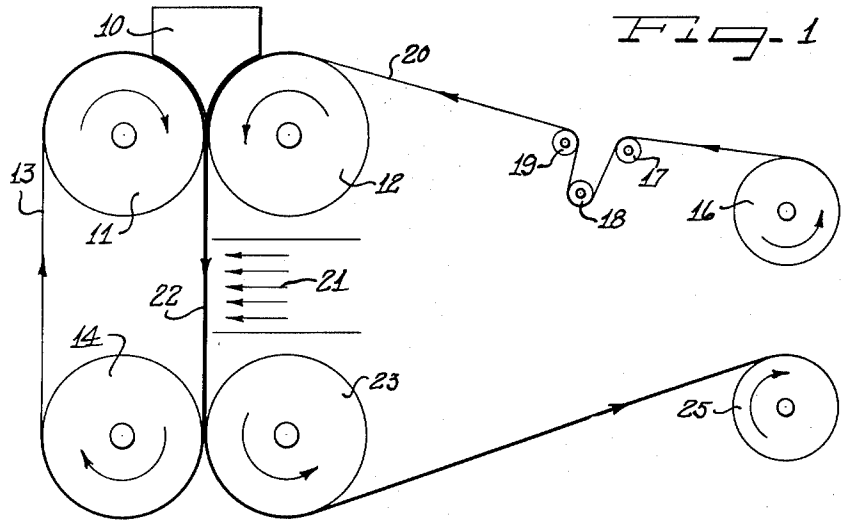

Fig. 2

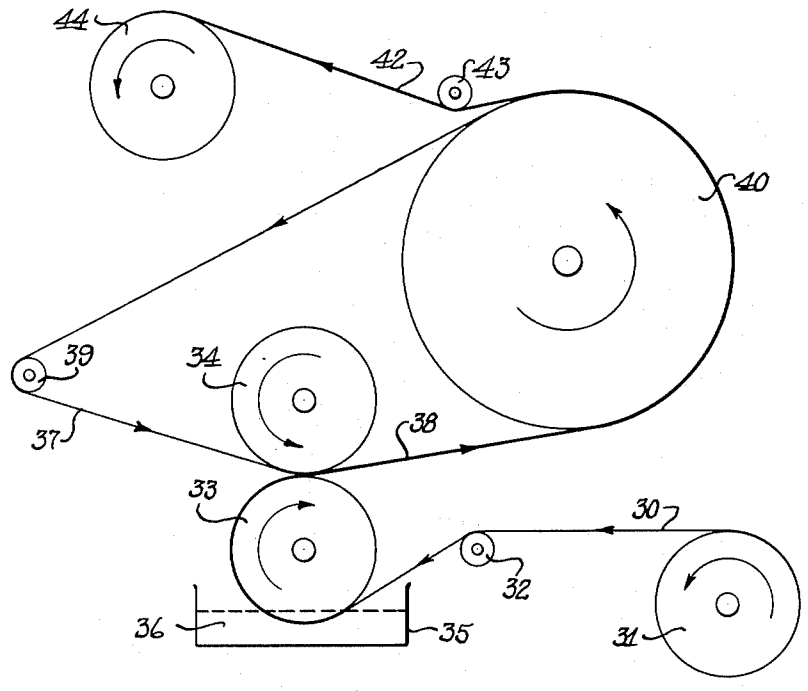

Inventors
Everett R. Wiles
Arthur T. Vallier
Harold H. Coffman
Attys

Hill, Sherman, Meroni, Gross & Simpson
by

July 3, 1956 E. R. WILES ET AL 2,753,275

METHOD OF CONTINUOUSLY COATING PAPER WITH WAX AND RESULTANT PRODUCT

Filed Feb. 5, 1952 2 Sheets-Sheet 2

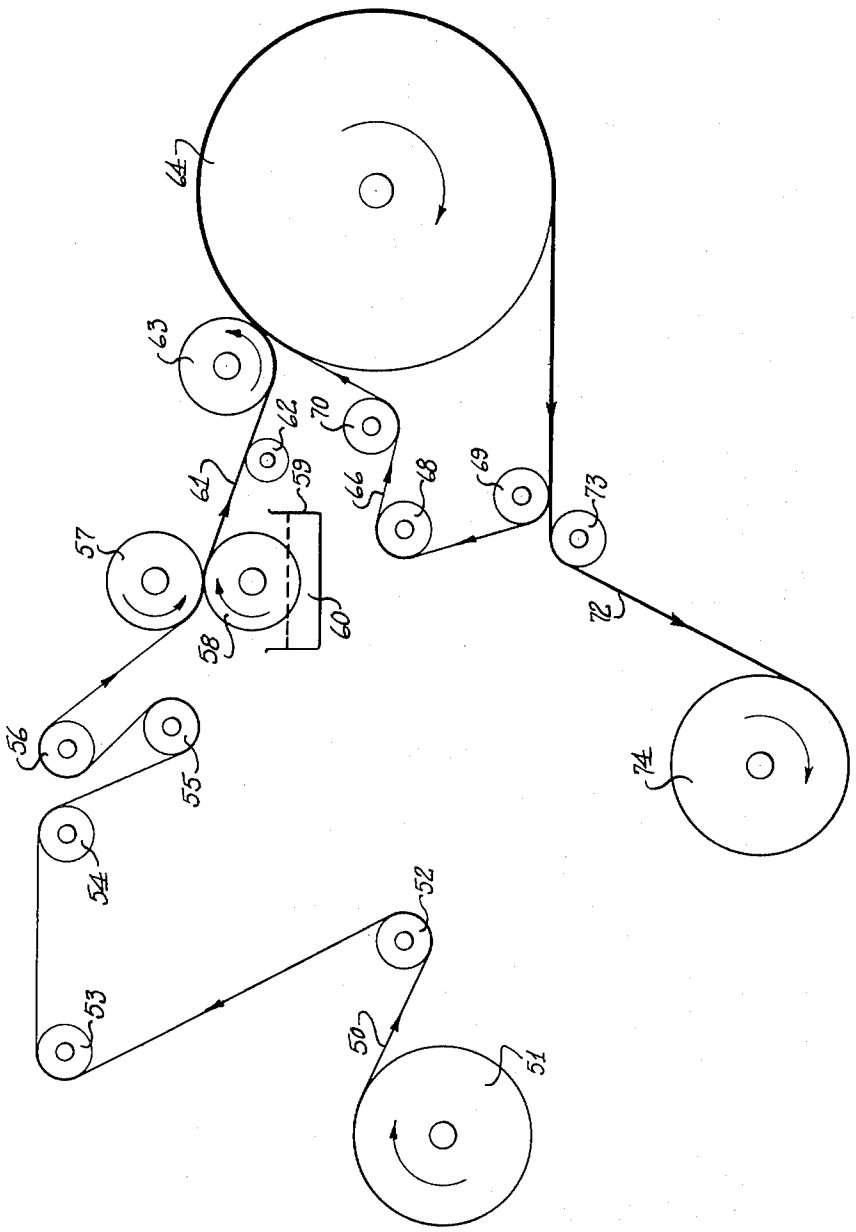

Fig-3

Inventors
Everett R. Wiles
Arthur T. Vallier
Harold H. Coffman
Attys

by Hill, Sherman, Meroni Gross & Simpson

United States Patent Office

2,753,275

Patented July 3, 1956

2,753,275

METHOD OF CONTINUOUSLY COATING PAPER WITH WAX AND RESULTANT PRODUCT

Everett R. Wiles, Arthur T. Vallier, and Harold H. Coffman, Barnsdall, Okla., assignors, by mesne assignments, to Marathon Corporation, Menasha, Wis., a corporation of Wisconsin

Application February 5, 1952, Serial No. 269,944

12 Claims. (Cl. 117—64)

The present invention relates to web or sheet material coated with wax having a high gloss finish, and to a method of making the same.

In making wax coated paper for use as a wrapping material for foodstuffs, particularly bread, three considerations are present. First, and most important, is the problem of providing a sufficiently water vapor impermeable wrapper. The second consideration is the provision of good heat sealing qualities by the wax compositions. The third consideration is that of providing the wrapper with a glossy surface to enhance the appearance of the wrapped article for display purposes. Heretofore, these wrappers have often been provided with relatively glossy coatings of paraffin wax. It is well known that microcrystalline wax would be preferable to paraffin wax for the same purpose because of the greater ability of microcrystalline wax coatings to be creased without loss of moisture vapor resistance, as compared to paraffin wax coatings, and because of the former's better heat sealing properties. However, even very small amounts of microcrystalline wax in admixture with paraffin wax, when applied by conventional techniques, destroy the gloss of the resulting coating. Apparently, this difference in appearance is due primarily to the nature and the size of the crystals of the respective wax. Paraffin wax when applied as a coating in molten form crystallizes in relatively large regular crystals which have good light reflecting properties. On the other hand, microcrystalline wax forms extremely minute, irregular crystals which diffuse or diffract rather than reflect an incident beam of light, with the result that a matte rather than a glossy surface is produced.

We have now found that wax coated material having a high surface gloss can be produced, when using microcrystalline wax, paraffin wax, or mixtures containing paraffin wax and microcrystalline wax, by a process which involves applying a coating composition containing the wax or wax mixtures to the web to be coated, bringing the resulting coated web while the wax is in a continuous heated film into contact with a smooth surfaced backing; setting the wax composition while in contact with the backing, and then stripping the backing from the coated web. The resulting wax coated web, even where it contains substantial amounts of microcrystalline wax, has a gloss comparable to and in most cases exceeding the gloss produced when using paraffin wax in other types of processes, and a resistance to moisture vapor permeation after bending substantially greater than that possessed by paraffin wax coatings of the same thickness. When the invention is applied to coatings of paraffin wax alone, a higher gloss is achieved than by any other method with which we are familiar.

An object of the present invention is to provide a web or sheet having a high gloss wax coating.

Still another object of the present invention is to provide a wax-coated paper having a glossy surface and improved resistance after bending to moisture vapor permeation.

Still another object of the present invention is to provide an improved method for applying coating compositions including microcrystalline wax to paper webs.

Another object of the present invention is to provide means for applying a glossy cast surface to a coating composition including microcrystalline wax.

Another object of the invention is to provide a wax-coated paper web having a glossy surface and improved heat sealing characteristics.

Other objects and features of the present invention will be apparent to those skilled in the art from the description of the attached sheet of drawings in which:

Figure 1 is a schematic illustration of a coating assembly which can be employed to produce the improved wax coated paper of the present invention;

Figure 2 is a modified form of a wax coating assembly which might be employed; and

Figure 3 is a schematic illustration of a still further modified assembly which may be used in the practice of the present invention.

As shown in the drawings:

The coating assembly of Figure 1 includes a coating fountain **10** containing a supply of wax which may be molten microcrystalline wax, paraffin wax, or a mixture of microcrystalline wax and paraffin wax. In the practice of the present invention using mixtures, we employ mixtures of paraffin and microcrystalline waxes having a microcrystalline wax content of at least 10% by weight and preferably over 50% if maximum gloss is desired. Suitable blends can be obtained using ordinary paraffin wax having melting points from 120° to 150° F. and microcrystalline wax having melting points between 135° and 195° F. The coating composition may also include conventional additives such as ester gum, synthetic resins, and metallic compounds of the higher molecular weight fatty acids. Surprisingly, the addition of paraffin wax to the microcrystalline wax tends to reduce rather than increase the degree of gloss of the finished surface. The gloss produced is roughly proportional to the ratio of microcrystalline wax used, so that as the relative amount of microcrystalline wax increases, the gloss also increases.

The coating fountain **10** deposits a continuous film of wax of any desired thickness into the nip of a pair of oppositely rotating laminating rolls **11** and **12**. Trained around the laminating roll **11** is a casting web **13** in the form of an endless belt. The material of the casting web is one which forms only a weak bond with the wax coating being applied. A weak bond may be inherent or induced as by means of a silicone coating. A preferred material consists of cellulose acetate, while other materials such as polyethylene, ethyl cellulose, regenerated cellulose, glassine paper and polymeric materials which produce a smooth surface and do not form a firm bond with the wax may be employed. The endless casting web **13** is tensioned between the laminating roll **11** and a stripping roll **14** located immediately below the laminating roll **11**.

The paper base for the wax coated paper is supplied as a web **20** from a supply roll **16** and passes over a plurality of tensioning rolls **17**, **18** and **19** before being trained about the periphery of the laminating roll **12**. The outer surface of the paper web **20**, as it passes through the nip of the rolls **11** and **12** receives the wax coating film from the coating fountain **10** and at the same time, the resulting wax-coated paper web is laminated to the casting web **13**.

The intermediate wax layer between the casting web **13** and the paper web **20** is still in a relatively plastic condition after it leaves the laminating rollers **11** and **12**. In order to set the applied wax coating into a relatively non-plastic, firm, coherent state, a stream of chilled air, generally indicated by the numeral **21**, is directed against the

laminated sheet 22 leaving the laminating rolls 11 and 12. After cooling, the laminated web 22 is directed between the stripping roll 14 and a roll 23, where the casting web 13 is stripped from the laminated web by the action of the stripping roll 14, while the wax coated paper web is wound about a take-up roll 25.

In the embodiment of the invention illustrated in Figure 2, a paper web 30 is supplied from a supply roll 31 and passes over a tensioning roll 32. Next, the web 30 is trained around one of a pair of laminating rolls 33 and 34, the roll 33 being partially immersed in a dip tank 35 containing a liquid coating composition 36 including microcrystalline wax. As the tensioned web 30 passes into the dip tank 35, a surface coating of the wax composition is applied in the form of a film to the surface of the web, and as the coated web passes through the nip of the rolls 33 and 34, it comes into pressure contact with a casting web 37 to the type previously described. The result is the lamination of the casting web 37 to the wax coated surface of the web 30, producing a laminate 38. It is important that the wax-coated surface attach itself to the casting web through the medium of a relatively weak bond. In the case of casting webs made from cellulose acetate and the like, this weak bonding is inherent. Where the casting web does not provide the proper type of bond, it may be treated with a film-like material such as a siloxane polymer to achieve the proper bonding characteristics. The casting web 37 is in the form of an endless loop supported between a tensioning roll 39 and a chilled casting roll 40. The temperature of the chilled casting roll 40 is preferably adjusted by circulating a coolant such as brine through the roll to bring the temperature of the laminate 38 down to a point where the wax coating is chilled into a non-plastic, firm and coherent state. After passage of the laminate 38 about a portion of the periphery of the casting roll 40, the resulting glossy surfaced wax coated web 42 is stripped from the casting web and passes under a roll 43 to be wound on a take-up roll 44.

In the form of the invention illustrated in Figure 3, a web 50 of paper is continuously supplied from a supply roll 51 and passes over a series of tensioning rolls 52, 53, 54, 55 and 56 and then into the nip between a pair of coacting coating rolls 57 and 58. The coating roll 58 is partially immersed in a coating pan 59 containing a wax coating composition 60 including microcrystalline wax. After application of the wax coating, the resulting wax coated web 61 passes over a doctor roll 62 which smooths out the previously applied film of wax. Next, the web passes into the nip between a laminating roll 63 and a chilled casting roll 64. The casting roll 64 is rotated in a clockwise direction as viewed in Figure 3, and has a surface temperature sufficient to set the wax in the previously applied coating.

A casting web 66 is supported in the form of an endless loop between a pair of rolls 68 and 69 and the chilled casting roll 64. An additional tension roll 70 provides additional means for adjusting the tension on the casting web 66 being fed jointly with the wax coated web 61 into the nip between rolls 63 and 64.

After chilling of the wax composition, a wax coated web 72 is stripped from the resulting laminate in the vicinity of the roll 69 and after passage over a tensioning roll 73, the web is wound upon a take up roll 74.

The following table indicates the improved results obtained from the inclusion of microcrystalline wax with paraffin wax. All coatings were applied to paper stock using cellophane as the casting web. The samples were placed in a constant temperature room, and the gloss was determined by means of a Gardner machine at a 75° angle from the vertical. The microcrystalline waxes included waxes having a melting point of 190 to 195° F., others having a melting point of 180 to 185° F., and still others having a melting point of 170 to 175° F.

The samples labeled "Starwax 100" and "Barecozite" are commercially available microcrystalline waxes.

Percent Microcrystalline Wax	Percent 133/35 Paraffin	Gloss								
		1 hr.	24 hr.	48 hr.	6 days	8 days	14 days	21 days	28 days	60 days
190/195:										
100	0	90	93	93	93	93	93	95	95	92
180/185:										
100	0	93	90	90	90	90	93	93	93	93
95	5	92	92	94	92	95	95	95	95	92
90	10	94	94	94	94	98	98	98	98	94
75	25	96	96	96	96	98	95	95	95	92
50	50	91	91	91	91	93	90	90	90	80
25	75	75	77	77	77	76	82	82	80	75
10	90	67	71	71	71	70	72	72	70	65
5	95	30	37	37	37	40	40	42	42	42
170/175:										
100	0	90	90	90	88	90	87	86	85	77
Starwax 100:										
100	0	93	90	95	93	93	93	91	90	82
95	5	93	93	95	94	95	95	95	95	87
90	10	88	93	93	92	92	92	92	91	87
75	25	87	85	90	87	89	88	87	88	80
50	50	80	90	94	92	92	92	92	92	84
25	75	81	81	81	80	87	85	86	86	75
10	90	54	54	54	62	66	62	62	64	60
5	95	65	76	76	75	75	75	77	75	70
Barecozite:										
100	0	92	95	96	96	97	96	98	97	87
95	5	92	93	95	95	96	96	96	95	85
90	10	85	93	93	95	95	95	96	95	87
75	25	80	75	75	88	87	90	90	90	82
50	50	95	95	95	95	95	95	97	96	85
25	75	90	85	85	85	83	84	85	84	75
10	90	69	64	66	64	64	66	66	65	58
5	95	75	77	76	75	75	75	77	75	69
0	100	82	83	85	81	80	78	77	76	69
Blank paper		7								

In general, mixtures of paraffin wax and microcrystalline wax exhibited less gloss and less permanence as the amount of paraffin wax was increased. This effect was particularly noticeable when the amount of paraffin wax in the mixture was increased to 50% by weight and above.

It will be evident that various modifications to the processes previously discussed and shown in the drawings are possible within the scope of the present invention. For example, the coating composition need not be a hot melt composition, but aqueous coating compositions including microcrystalline wax can also be employed. In this case, the water in the aqueous emulsion may be removed by passage of the wax coated paper web over heated drying rolls, followed, if necessary, by chilling of the wax coating into a non-plastic state. The heat of the drying rolls

not only eliminates the water but melts and coalesces the wax phase into a continuous film. The casting web may even be eliminated and a glossy surfaced metallic roll employed in its place. In particular, a polished metal roll, or a nickel or chromium plated roll having a mirror-like finish, and provided with means for cooling the surface of the roll can be employed as the smooth surfaced backing.

Various other modifications of the process herein described will suggest themselves to those skilled in the art, and it is not our intention to limit the scope of the invention except as necessitated by the appended claims.

We claim as our invention:

1. A method of continuously producing a glossy coating on a travelling web which comprises continuously applying a hot-melt coating composition containing at least 10% by weight microcrystalline wax to said web, bringing the coated surface of the resulting coated web into contact with a smooth glossy surfaced backing while said composition is in the form of a continuous hot plastic film, setting said composition while in contact with said backing and without relative movement in respect of said backing to produce a glossy solidified coating, and then effecting relative separation of said backing and of the coated web.

2. The method of continuously producing a glossy coating on a travelling web which comprises applying a hot-melt coating composition containing at least 50% by weight microcrystalline wax in a plastic condition to said web, bringing the coating of the resulting coated web into contact with a smooth glossy surfaced backing while said composition is in the form of a continuous hot plastic film, setting said composition while in contact with said backing and without relative movement in respect of said backing to produce a glossy solidified coating, and then effecting separation of said backing and the coated web.

3. The method of continuously producing a glossy coating on a travelling paper web which comprises applying a hot-melt coating composition of wax containing at least 10% by weight microcrystalline wax in a plastic condition to said web, bringing the coated surface of the resulting coated web into contact with a smooth glossy surfaced backing while said wax composition is in the form of a continuous hot plastic film, chilling said wax composition while in contact with said backing and without relative movement in respect of said backing to produce a glossy solidified coating, and then effecting separation of said backing from the coated web.

4. The method of continuously producing a glossy coating on a travelling web which comprises applying a hot-melt coating composition containing at least 10% by weight microcrystalline wax in a plastic condition to said web, pressing a smooth glossy surfaced backing in intimate contact against the coated surface of said web while the composition is in a hot plastic state, setting said composition while in intimate pressure contact with said backing and without relative movement in respect of said backing to produce a glossy solidified coating, and then stripping said glossy surfaced backing from said coated surface.

5. The method of continuously producing a glossy coating on a travelling web which comprises flowing a hot melt coating composition containing at least 50% by weight microcrystalline wax onto said web, pressing a smooth glossy surfaced backing in intimate contact against the coated surface while the composition is in a hot plastic state, chilling said coating composition while in such contact with said backing and without relative movement in respect of said backing to produce a glossy solidified coating, and stripping said glossy surfaced backing from said coated surface.

6. The method of continuously producing a glossy coating on a travelling paper web which comprises applying a hot-melt coating composition containing at least 50% by weight microcrystalline wax in a plastic condition onto said web, bringing the coated surface of the resulting coated web into intimate pressure contact with a smooth glossy surfaced backing while said coating is in the form of a continuous hot plastic film, moving said coated web and said backing in said pressure contact jointly and without relative movement in respect of said coated web and said backing through a chilling zone to set said coating composition to produce a glossy solidified coating, and stripping said backing from the coated web.

7. The method of continuously producing a glossy coating on a travelling paper web which comprises flowing a hot melt composition containing at least 50% by weight microcrystalline wax onto said web, bringing the resulting coating while in a hot plastic state into contact with a smooth glossy surfaced backing to form a weak bond therebetween, moving said coated web and said backing while bonded together through a chilling zone to set said wax composition and produce a glossy solidified coating, and stripping said backing from the coated web.

8. The method of continuously producing a glossy coating on a travelling paper web which comprises applying a hot-melt wax coating composition containing at least 50% by weight microcrystalline wax in a plastic condition onto said web, bringing the coated surface of the resulting coated web while in a hot plastic state into intimate contact with a moving endless web of a smooth glossy surfaced backing material, moving the resulting coated web and said endless web while bonded together through a chilling zone to set said wax composition and produce a glossy solidified coating, and thereafter stripping said coated web from said endless web.

9. The method of continuously producing a glossy coating on a travelling paper web which comprises applying a hot melt wax coating composition containing at least 10% by weight microcrystalline wax onto said web, bringing the resulting coating while in a hot plastic state into intimate contact with a moving endless web of a smooth glossy surfaced backing material to lightly bond said web and backing material to one another, moving the resulting laminate of said coated web and said endless web through a chilling zone to set said wax composition and produce a glossy solidified coating, and thereafter stripping said coated web from said endless web.

10. A method of continuously producing a glossy coating on a travelling paper web, which comprises applying a hot melt composition of 0–90% by weight paraffin wax and 10–100% by weight microcrystalline wax in a fluid condition onto a surface of a travelling paper web under tension, contacting the coated paper web surface while in a hot plastic state in intimate contact with a smooth glossy surfaced web under tension and passing the contacted webs through a press nip to smooth out the coating therebetween and to effect pressure contact therebetween, maintaining said pressure contact therebetween while cooling the glossy surfaced web and the coated paper web to chill the coating composition and produce a glossy solidified coating, and then stripping said glossy surfaced web from said coated paper web.

11. A paper web coated with a glossy wax coating produced by the process of claim 10.

12. A web having a glossy coating produced by the process of claim 1.

References Cited in the file of this patent

UNITED STATES PATENTS

318,911	Jowitt	May 26, 1885
1,370,412	Crowell	Mar. 1, 1921
1,757,620	Decker	May 6, 1930
2,267,470	Kabela	Dec. 23, 1941
2,443,470	Bergstein	June 15, 1948
2,642,366	Rumberger	June 16, 1953

FOREIGN PATENTS

696,705	Great Britain	Aug. 18, 1948
611,317	Great Britain	Oct. 28, 1948