PCT WORLD INTELLECTUAL PROPERTY ORGANIZATION
International Bureau

INTERNATIONAL APPLICATION PUBLISHED UNDER THE PATENT COOPERATION TREATY (PCT)

(51) International Patent Classification 5 :		(11) International Publication Number:	WO 91/07018
H04B 3/00	A1	(43) International Publication Date:	16 May 1991 (16.05.91)

(21) International Application Number: PCT/GB90/01680

(22) International Filing Date: 2 November 1990 (02.11.90)

(30) Priority data:
8924839.7 3 November 1989 (03.11.89) GB

(71) Applicant *(for MG only)*: RAYCHEM LIMITED [GB/GB]; Rolls House, 7 Rolls Buildings, Fetter Lane, London EC4 1NL (GB).

(71) Applicants *(for all designated States except MG US)*: RAYNET GMBH [DE/DE]; Clemens August Strasse 16-18, D-5300 Bonn 1 (DE). N.V. PHILIPS GLOEILAMPENFABRIEKEN [NL/NL]; Groenewoudseweg 1, NL-5621 BA Eindhoven (NL).

(72) Inventors; and
(75) Inventors/Applicants *(for US only)* : MARTIN, Horst [DE/DE]; Zur Friedenseiche 18, D-5860 Iserlohn (DE). NAAB, Alfred [DE/DE]; Im Wehrfeld 24, D-5205 St Augustin (DE). HESSE, Bernhard [DE/DE]; Siegstrasse 149, D-5900 Siegen (DE). WEIDHAAS, Wolfgang [DE/DE]; Rambouxstrasse 88, D-5000 Koln 60 (DE). QUEDNAU, Gunther [DE/DE]; Eppenhauserstrasse 81, D-5800 Hagen 1 (DE). FREMGEN, Dieter [DE/DE]; Hans-Bockler Strasse 46, D-5603 Wulfrath (DE).

(74) Agents: HALL, Robert, Leonard et al.; Intellectual Property Law Department, Raychem Limited, Faraday Road, Dorcan, Swindon, Wiltshire SN3 5HH (GB).

(81) Designated States: AT (European patent), BE (European patent), CA, CH (European patent), DE (European patent), DK (European patent), ES (European patent), FI, FR (European patent), GB (European patent), GR (European patent), IT (European patent), JP, LU (European patent), MG, NL (European patent), NO, SE (European patent), US.

Published
With international search report.

(54) Title: TRANSMISSION OF BROADBAND SIGNALS

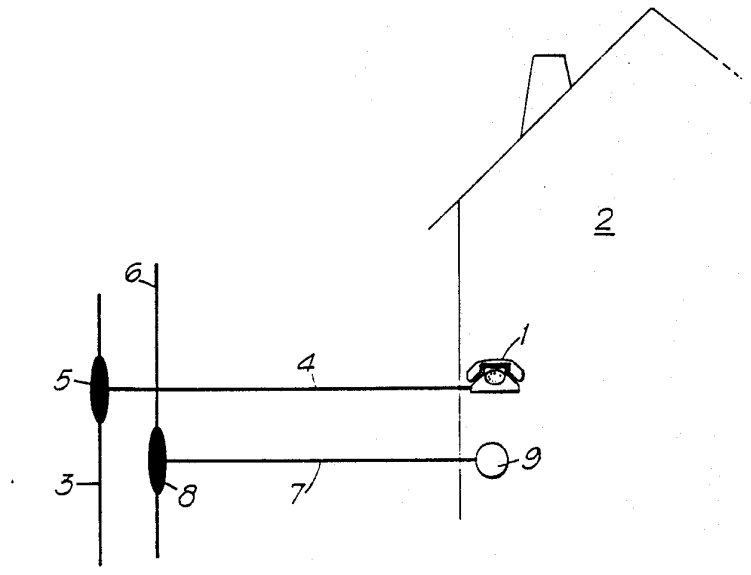

(57) Abstract

A method of transmitting a broadband electrical signal to a subscriber by means of a telecommunications cable, the telecommunications cable comprising at least one pair of electrical conductors surrounded by an electrical shield, which method comprises applying the broadband signal between (a) the shield and (b) at least one of the conductors of the pair.

DESIGNATIONS OF "DE"

Until further notice, any designation of "DE" in any international application whose international filing date is prior to October 3, 1990, shall have effect in the territory of the Federal Republic of Germany with the exception of the territory of the former German Democratic Republic.

FOR THE PURPOSES OF INFORMATION ONLY

Codes used to identify States party to the PCT on the front pages of pamphlets publishing international applications under the PCT.

AT	Austria	**ES**	Spain	**MG**	Madagascar
AU	Australia	**FI**	Finland	**ML**	Mali
BB	Barbados	**FR**	France	**MR**	Mauritania
BE	Belgium	**GA**	Gabon	**MW**	Malawi
BF	Burkina Faso	**GB**	United Kingdom	**NL**	Netherlands
BG	Bulgaria	**GR**	Greece	**NO**	Norway
BJ	Benin	**HU**	Hungary	**PL**	Poland
BR	Brazil	**IT**	Italy	**RO**	Romania
CA	Canada	**JP**	Japan	**SD**	Sudan
CF	Central African Republic	**KP**	Democratic People's Republic of Korea	**SE**	Sweden
CG	Congo			**SN**	Senegal
CH	Switzerland	**KR**	Republic of Korea	**SU**	Soviet Union
CI	Côte d'Ivoire	**LI**	Liechtenstein	**TD**	Chad
CM	Cameroon	**LK**	Sri Lanka	**TG**	Togo
DE	Germany	**LU**	Luxembourg	**US**	United States of America
DK	Denmark	**MC**	Monaco		

TRANSMISSION OF BROADBAND SIGNALS

The present invention relates to a method and devices for transmission of broadband electrical signals, for example data and/or video, to a subscriber, particularly a subscriber who has a pre-installed telephone cable. The invention can avoid the need for installation of further drop cables (generally coaxial cables), dedicated to the new data or video service.

As communications technology advances, subscribers are requesting services in addition to simple telephone service. For example, there is a demand for video and data by cable which requires a high band width for transmission. In this specification any bandwidth greater than that for simple telephone operation (voice band, generally about 4 KHz alalogue amplitude modulated and 64 KHz digital) preferably greater than that for 2,3,4,5,10 or 20 combined public switched telephone signals is referred to as broadband, and includes but is not limited to data and video. In particular, we are concerned with RF, VHF, and UHF signals, preferably of frequency greater than 20, more preferably greater than 30, especially greater than 40 KHz analogue (AM) or greater than 200,300 or 400 KHz digital. In practice we are likely to be concerned with values greater than 30 or 40 MHz, particularly from 47-862 MHz. The invention may also be considered useful for signals having a bandwidth of at least 0.0001, 0.001 or 0.01 times that of NTSC format video.

For some years now broadband signals have been transmitted electrically by coaxial cable. In many installations part of the network is active, which means that amplifiers are provided every few kilometers, and part of the network, namely the drops to individual subscribers running from so-called splitter boxes, are passive. If cable television (CATV), for example, is to be supplied to a subscriber the public right of way and the subscribers gar-

den have to be dug-up and a new, coaxial, line installed in the ground. This is of course very expensive.

We have now discovered that installation of a new cable can be avoided and ordinary telephone cables used instead, particularly pre-installed cables already serving the subscriber.

Thus, the invention provides a method of transmitting a broadband electrical signal (such as data or video and particularly RF, VHF or UHF signals) to a subscriber by means of a telecommunications cable, preferably a telephone cable particularly a drop cable, preferably a preinstalled cable, the telecommunications cable comprising at least one pair of electrical conductors surrounded by an electrical shield, which method comprises applying the broadband signal between (a) the shield and (b) at least one of the conductors of the pair. All of the conductors within the shield are preferably provided in pairs, preferably twisted pairs, and the cable preferably is not of the coaxial type.

This method will be particularly attractive where the telephone cable (or other telecommunications cable) is pre-installed and where it has surplus capacity, for example where a cable having at least two pairs of conductors supplies a subscriber who requires only a single telephone line. Telephone cables to subscribers (often called drop wires or drop cables) often contain 6,10,20 or 30 pairs of conductors and there will frequently be spare pairs not employed for the telephone service. In this case the telephone service and the broadband service can make use of different pairs.

The invention can, nonetheless, be used where this surplus capacity is not present. This can be done, for example, by transforming the telephone signal into a high frequency signal and multiplexing that signal with the new

broadband signal, and transmitting the combined signal in the way defined above. The signals would then be separated at the subscriber's premises. An alternative would be to retain the telephone signal at voice band frequency and apply the broadband signal on top of it at higher frequency. Again, some means of separation would be provided at the subscriber's premises.

The precise way in which the broadband signal is applied to the cable may depend on the type of cable, its length, the network architecture and the signal transmitted etc. For example, it may be applied between (a) the shield and (b) both of the conductors of the pair. The cable may comprise at least two pairs of electrical conductors surrounded by a an electrical shield, and the signal applied between (a) the shield and at least one (preferably both) of the conductors of one of the pairs and (b) at least one (preferably both) of the conductors of another of the pairs. That configuration where both conductors of the pairs referred to are employed is preferred at least for drop cables having six pairs (such as those used by the German Bundespost), and for the preferred network systems described below. With such cables one or more additional pairs can be dedicated to transmission of a voice band signal, such a signal being applied between the conductors of a pair in the usual way. If desired, substantially all of the unused pairs may be connected to the shield and if additional telephone service is later required one or more oof such pairs can be disconnected from the shield and used for telephone signals.

Some comments will now be made on a preferred broadband network, and a preferred telephone network with which it may be used. We are concerned preferably with the subscriber loop of a telephone network, also called the "local loop" or "last mile". In this part of the network a distribution cable, which may contain a few hundred pairs of

conductors, runs generally along public roads etc, and branch joints are made at regular intervals at which drop wires or cables running to each subscriber are spliced into the distribution cable. These branch joints may be environmentally sealed by an enclosure known as a splice case, for example a heat-shrinkable article such as that supplied by Raychem to the German Bundespost under the Trade Mark VASM.

The present broadband signal is applied to the drop cable preferably at a position between the splice case at the distribution cable and the subscriber. It is preferably applied near the splice case such that the splice case and a further enclosure (which may also comprise a heat-shrinkable article) environmentally-sealing a splice to a cable applying the broadband signal may be contained within a single housing such as a pedestal or a manhole (which term includes a hand hole). In some cases, a cable applying the broadband signal may be spliced at the splice case between the distribution cable and the drop cable, and a single splice case may then be used.

The cable introducing the broadband signal (which may comprise a coaxial cable) is preferably spliced to the drop cable (or to the distribution cable or to its drop splice) by a method that during splicing maintains conductivity along at least one pair of conductors of the drop telephone cable, since in this way telephone service to the subscriber need not be interrupted during introduction of the new broadband service. A preferred way in which this may be done will be described below.

The broadband signal is preferably transmitted to the drop cable from an active network device that is only a short distance away, and that is preferably contained in the same pedestal, man-hole or other housing that contains the splice closures. That active device may comprise an amplifier and may comprise an electrical/optical convertor

that generates the broadband electrical signal from an optical signal withdrawn from a waveguide such as an optical fibre. The active device may comprise means for adjusting the power of the broadband signal preferably according to an attenuation characteristic of the drop telephone cable. This ability to adjust the signal may be important since, in general, drop cables do not have the predetermined characteristics such as attenuation as a function of signal frequency or cable length that may be expected of a coaxial cable.

Such an active device may be provided one for each subscriber, in which case optimum performance may be obtained for each subscriber in spite of the varying lengths of drop cables (generally less than 100m, preferably less than 50m) from the positions where the signal is introduced to each subscriber.

The invention is particularly usefully used in conjunction on optical fibre distribution network that carries the broadband signal. That network may also carry the voice band telephone signal, the two different signals then being applied to the drop cable of an existing telephone network. The broadband and voice bands may be separated before application to the drop cable, and they may be separately applied as indicated above. Whilst installation of the new broadband system requires laying of the fibre cables generally along public rights of way, the cost and inconvenience of laying new drop cables into customers' premises is avoided. As an alternative, the optical fibre network may supply merely new services, such as data or video, and the existing telephone network continue to supply a telephone service.

We expect particularly good results when using the invention with an optical fibre distribution network of the following design. A single mode or multimode fibre bus runs

from a telecommunications central office along a public right of way or other route adjacent many subscriber premises. The bus may carry multiplexed signals, allowing many or all of the subscribers to communicate independently. Subscriber interface units (SIUs) are provided regularly along the bus, a preferred number being 20-30 generally about 24 per bus. Each SIU is provided with one or more optical taps by means of which an optical signal is withdrawn from the bus. The taps are preferably non-invasive, and preferably comprise a means for bending the fibre and an optical coupler that may be applied to the bent portion of the fibre such that the optical signal is withdrawn through a buffer of the fibre at an intermediate position along its length. An elecrical/optical convertor is provided to convert the optical signal from the fibre into the broadband electrical signal that is applied to the drop cable. This tapping and detection is disclosed and claimed in US 4747652 (Raychem), the disclosure of which is incorporated herein by reference. The SIU may also provide power and it may have electronics that can identify, for example, packets of information received by means of an address code, and pass on only those intended for the subscriber or subscribers that it serves. Each SIU preferably serves 4-25, particularly about 8 subscribers, and the method of the invention therefore envisages transmission of one or more signals to a plurality of subscribers, with if desired, individual adjustments of signal power for each subscriber.

We prefer that an SIU be provided with means whereby a characteristic (especially power) of each signal it applies to respective drop cables be independently adjustable according to some characteristic (especially attenuation) of the respective drop cable.

An SIU preferably has an enclosure especially of butt design to protect the tap or taps and any electronics etc

from the environment. The entering and leaving optical fibre cables may be sealed to the enclosure by a heat-shrinkable article, or the enclosure itself may be provided by a heat-shrinkable article. This enclosure is preferably contained within the same pedestal, man-hole or other housing referred to above.

Details of an optical fibre network employing non-invasive taps along a fibre bus are disclosed and claimed in US 4768854 (Raychem), the disclosure of which is incorporated herein by reference.

A preferred method and article will now be described by means of which the broadband signal may be applied to the telephone drop cable.

We prefer that an intermediate length of electrical shield of the telephone drop cable be removed, and an enclosure installed to bridge the resulting ends of the shield. The invention therefore also provides an enclosure having:

(1) an inlet for said telephone cable, which inlet has a first electrical contact for one resulting end of the shield;

(2) an outlet for said telephone cable, which outlet has a second electrical contact for the other resulting end of the shield;

(3) electrical connection (which may be provided by the walls of the enclosure) between the first and second contacts;

(4) means for making connections between and/or to conductors of said telephone cable;

(5) optionally an organizer for pairs of conductors of said telephone cable; and

(6) optionally means, such as attenuation coils, for shielding conductors of said telephone cable from the broadband signal as they pass through the enclosure.

In order that the enclosure be capable of being installed around the cable without totally severing the cable, the enclosure or part of it is preferably of "wrap-around" design. The term "wrap-around" is well understood in the cables accessories art (reference may be made for example to GB 1155470), and as used herein it implies no particular shape nor flexibility, but rather the ability of installation around an elongate substrate (such as a cable) without access to an end thereof. Thus, the enclosure preferably has an inlet and outlet that are not permanently closed in cross-section, but instead are or may be opened out such that the cables may be laterally inserted therein. The enclosure may comprise two half-shells that are brought together around the cable. The half-shells may be hinged or otherwise fixed together to give the enclosure the configuration of a clam-shell. This wrap-around, half-shell or clam-shell design may be possessed by the entire enclosure or only part of it. For example the enclosure may comprise a substantially rectangular box, having a removable lid. Outlets and inlets may be provided at opposite edge faces (for an in-line design) or at a single edge face (for a butt design). The outlets/inlets may comprise extensions to the faces, or part of the outlets/inlets may be provided by the faces, and part by the lid, such that the closed cross-section of the outlets/inlets regain a closed cross-section when the lid is in place. Such an enclosure can be built around a cable without severing all of its conductors.

The inlets/outlets preferably have contact means, such as mechanical contacts, preferably resiliently biased, and especially in the form of leaf-springs, which make contact with the cable shield.

The enclosure may have an inlet and an outlet for the telephone cable, and a similar inlet for a coaxial cable carrying the broadband signal. The enclosure may therefore have some similarities to a conventional CATV splitter box. Its function will however be different, and some aspects of its structure will therefore be different. In particular its main inlet and outlet, whilst having contacts for an outer conductor, will not in general have a contact for a coaxial cable central conductor but will preferably have means for organizing and making connections to the pairs of conductors carried by a regular telephone cable.

The invention therefore provides a method and corresponding enclosure for making an electrical connection to a cable comprising at least one pair of conductors surrounded by an electrical shield, which comprises:

(a) removing the shield from a portion of cable between the ends of the cable and leaving unsevered at least one conductor of the cable (generally at least one pair of conductors that provide a telephone service, particularly a pre-existing telephone service);

(b) electrically connecting a conductor to at least one of the conductors of the pair at said portion (generally electrically connecting a broadband cable to the shield of said cable and to one or both of the conductors of the pair, preferably connecting the outer conductor of a coaxial cable directly or indirectly to both the shield and to both conductors of a pair and connecting the inner conductor of the coaxial cable to both conductors of another pair); and

(c) installing around said portion an enclosure having an inlet and an outlet for said cable,

the inlet and outlet being of wraparound type and having respective electrical contacts for the shield adjacent each edge of said portion and electrical connection between the electrical contacts preferably also contacting the inner conductor of said coaxial cable where used.

The invention is further illustrated by reference to the accompanying drawings, in which

Figure 1 shows an existing telephone and broadband network,

Figure 2 shows a network employing the invention;

Figure 3 shows a method of making an electrical connection by means of the invention;

Figure 4 shows an enclosure according to the invention; and

Figure 5 shows a wraparound closure.

Figure 1 shows a conventional way in which a telephone signal is transmitted to a telephone 1 or socket therefor at a subscriber's premises 2. A distribution cable 3 is spliced to a drop telephone cable 4, the splice being sealed by a splice case 5. A broadband coaxial cable 6 is also installed, having a drop coaxial cable 7 spliced at a passive splitter 8. The drop coaxial cable 7 also leads to the subscriber 2, and is terminated at a television or computer etc or a socket therefor. Where a broadband service has to be provided to a subscriber 1 a new line 7 has to be added which generally requires excavation since existing cable 4 is likely to be direct buried rather than ducted.

Figure 2 illustrates the invention. A broadband signal is applied to the drop cable 4 by means of broadband

cable 10 at a position 11 between the subscriber 2 and splice case 5.

The broadband signal transmitted in cable 10, which may comprise a coaxial cable, is preferably obtained from a dvice such as a subscriber interface unit (SIU) 12. The SIU 12 may have many functions, especially the withdrawal of an optical signal from an optical fibre bus 13, and its conversion to an electrical signal of the desired power. The desired power of the electrical signal will depend on a characteristic of the drop cable 4 particularly on its attenuation between position 11 and the subscriber 2.

The splice 5, the SIU 12 and an enclosure around a splice between cables 4 and 10 may all be sealed using heat-shrinkable articles and since they are preferably located close to one another they are preferably located in a single housing 15.

Figures 3A, 3B and 3C illustrate a way in which cable 10 may be joined to drop cable 4. A portion of cable jacket 16 is removed from between the ends of cable 4, and a shorter length of cable shield 17 is removed, leaving exposed cable shield at each end. This reveals twisted pairs of conductors 18. Cable 10 is then electrically connected to cable 4 such that a broadband signal carried by cable 10 is applied between (a) the shield 17 and the conductors of one pair 6A and (b) the conductors of another pair 6B. Other pairs, for example 6C remain for transmission of a telephone signal. In the embodiment illustrated the cable supplying the broadband signal is a coaxial cable 10 comprising a central conductor 19, and outer conductor 20 and a jacket 21.

The connection made in figures 3A, 3B and 3C may be performed without disrupting the telephone service provided along twisted pair 6C. This may be done by building an

enclosure around the drop cable 4 and, for example, plugging cable 10 into that enclosure. Such an enclosure may contain the various connections and any electronics necessary.

Such an enclosure 22 is illustrated in figures 4A and 4B. The drop cable 4 may enter through inlet 23 and leave through outlet 24. The cable 10 supplying the broadband signal may enter through inlet 25.

Figure 4B shows a partial section through an enclosure of the general type as that shown in figure 4A. The enclosure comprises a generally rectangular, hollow body 26 and lid 27. The outlet 24 makes electrical contact to shield 17 by means of contacts 28. The body 26 or other part of the enclosure may comprise a metal for shielding, and also for connecting contact 28 with contact 29. Contact 29 is provided in inlet 25 into which coaxial cable 10 (see figure 3C) may be plugged. Thus the shield of cable 10 is connected to the shield of cable 4. Also connected to the shield is pair 6A which is shown in figure 4B terminating to the wall of the body 22 at position 30. A centre conductor 19 of cable 10 (figure 3C) is connected to contact 31 when cable 10 is plugged into the enclosure 22. This causes centre conductor to be connected to pair 6B. Pair 6C leaves the enclosure 22 out of view of the section illustrated.

The various cables entering and leaving enclosure 22 may be sealed to the inlets and outlets by means of heat-shrinkable sleeves 32 optionally internally-coated with a sealing material.

The enclosure is shown containing an organizer 33 for the pairs 6, and also a device 34 for splicing conductors if need be. An electronics board 35 may also be provided.

The enclosure 22 may be of the wrap-around design, half of which is shown incomplete in figure 5. The half-

inlet 23 and organizer 33 may be seen. Two such half enclosures, and/or half-inlets/outlets and/or half organizers may be hinged together if desired.

For the avoidance of doubt it is here noted that the invention provides various methods and articles for supplying signals to subscribers, particularly through existing telephone cables. Any of the cables, connections, enclosures and/or network configurations may be selected.

CLAIMS

1. A method of transmitting a broadband electrical signal to a subscriber by means of a telecommunications cable, the telecommunications cable comprising at least one pair of electrical conductors surrounded by an electrical shield, which method comprises applying the broadband signal between (a) the shield and (b) at least one of the conductors of the pair.

2. A method according to claim 1, is which the telecommunications cable is a pre-installed cable.

3. A method according to claim 1 or 2, in which the broadband signal is applied between (a) the shield and (b) both of the conductors of the pair.

4. A method according to claim 1, 2 or 3, in which the telecommunications cable comprises at least two pairs of electrical conductors surrounded by an electrical shield, which method comprises applying the broadband signal between (a) the shield and at least one of the conductors of one of the pairs and (b) both of the conductors of another of the pairs.

5. A method according to any preceding claim which is additionally a method of transmitting a voice band electrical signal to the subscriber, the telecommunications cable comprising at least two pairs of electrical conductors surrounded by an electrical shield, which method comprises applying the broadband signal between (a) the shield and (b) at least one of the conductors of one of the pairs and applying the voice band signal between the conductors of another of the pairs.

6. A method according to claim 5, in which the telecommunications cable comprises at least six pairs of con-

ductors surrounded by an electrical shield, which method comprises applying the broadband signal between (a) the shield and both conductors of at least one of the pairs, and (b) both conductors of another of the pairs, and applying the voice band signal between the conductors of another of the pairs.

7. A method according to any preceding claim, in which said telecommunications cable runs from a distribution cable to the subscriber, the broadband signal being applied to said telephone cable at a position where it joins the distribution cable.

8. A method according to any of claims 1-6, in which said telecommunications cable runs from a distribution cable to the subscriber, the broadband signal being applied to said telecommunications cable at an intermediate position thereof, between the subscriber and a position where said telecommunications cable joins the distribution cable.

9. A method according to claim 8, in which an electrical cable for the broadband signal is spliced to said telecommunications cable at the intermediate position by a method that during splicing maintains electrical con ductivity along at least one pair of conductors of said telecommunications cable which can transmit telephone signals continuously.

10. A method according to claim 8 or 9, in which an enclosure is installed around said telecommunications cable at the position where the broadband signal is applied.

11. A method according to claim 10, in which an intermediate length of electrical shield of said telecom munications cable is removed, and in which the enclosure is installed to bridge the resulting ends of the shield, the enclosure having:

(1) an inlet for said telecommunications cable, which inlet has a first electrical contact for one resulting end of the shield.

(2) an outlet for said telephone cable, which outlet has a second electrical contact for the other resulting end of the shield,

(3) electrical connection between the first and second contacts, and

(4) means for making connections between and/or to conductors of said telecommunications cable.

12. A method according to claim 11, in which the enclosure additionally comprises:

(5) an organizer for pairs of conductors of said telecommunications cable.

13. A method according to claim 11 or 12, in which the enclosure additionally comprises:

(6) means for shielding conductors of said telecommunications cable from the broadband signal as they pass through the housing.

14. A method according to any of claims 10-13, in which the enclosure has an inlet and an outlet for said telecommunications cable that are of wrap-around design.

15. A method according to any preceding claim, in which the broadband signal is generated from an optical signal by a device comprising an electrical/optical converter.

16. A method according to claim 15, in which said device additionally comprises means for adjusting the power of said broadband signal, and in which said power is

adjusted according to an attenuation characteristic of said telecommunications cable.

17. A method according to claim 15 or 16, in which the optical signal is withdrawn by means of a tap from an intermediate position along the length of an optical fibre bus.

18. A method according to claim 17 in which the electrical/optical converter and the tap are provided with an environmentally-sealed housing.

19. A method according to claim 18, in which:

(a) said telecommunications cable runs from a distribution cable to the subscriber, a splice between said telecommunications cable and the distribution cable being enclosed in a first environmentally-sealed enclosure;

(b) an electrical cable is provided from an electrical/optical converter and an optical tap at an optical fibre cable to said telecommunications cable,

(c) the electrical/optical converter and the tap are enclosed in a second environmentally-sealed enclosure;

(d) a splice between said electrical cable and said telecommunications cable are enclosed in a third environmentally-sealed enclosure.

20. A method according to claim 19, in which the first and/or second and/or third enclosure are sealed by means of a heat-shrinkable article.

21. A method according to claim 19 or 20, in which the first, second and third enclosures are housed in a single housing.

22. A method according to any preceding claim in which said telecommunications cable is terminated at the subscriber by means of a device having

(a) a telephone socket;

(b) a socket for connection to a broadband signal receiver; and

(c) means for shielding the socket (a) from the broadband signal.

23. A method of transmitting a signal to a plurality of subscribers, which comprises

(a) sending a broadband optical signal along an optical fibre;

(b) tapping the broadband signal from the fibre;

(c) converting said broadband optical signal to a broadband electrical signal;

(d) sending the broadband electrical signal along a plurality of telecommunications cables;

each telecommunications cable comprising at least one pair of electrical conductors surrounded by an electrical shield, the broadband electrical signal being applied between (a) the shield and (b) at least one of the conductors of the pair.

24. A method according to claim 24, in which each telecommunications cable comprises at least three pairs of conductors surrounded by an electrical shield, the broadband electrical signal being applied between (a) the shield and at least one of the conductors of one of the pairs and (b) both of the conductors of another of the pairs.

25. A method according to claim 12 or 24, in which the power of the broadband electrical signal sent along respective said telecommunications cables is adjusted according to an attenuation characteristic of each said telecommunications cable.

26. A method according to claim 23, 24 or 25, in which the optical fibre is a bus, carrying a plurality of multiplexed optical signals.

27. A method according to claim 26, in which the bus comprises a subscriber loop of a telecommunications network running from a central office.

28. A method of making electrical connection to a cable comprising at least two pairs of conductors surrounded by an electrical shield, which comprises

(a) removing the shield from a portion of cable between the ends of the cable and leaving at least one conductor pair of the cable unsevered;

(b) electrically connecting a conductor to at least one of the conductors of another of the pairs, at said portion;

(c) installing around said portion an enclosure having an inlet and an outlet for said cable, the inlet and outlet being of wraparound type and having respective electrical contact means for the shield adjacent each edge of said portion and electrical connection between said contacts.

29. An enclosure for use in making an electrical connection to a cable at a portion between the ends of the cable, the cable comprising at least one pair of conductors surrounded by an electrical shield, the enclosure comprising:

(a) a hollow body of wraparound type;

(b) an inlet and outlet for the telecommunications cable, each of wrap-around type and each having an electrical contact means for the shield of the cable;

(c) electrical connection between the electrical contact means;

(d) means for making connections between and/or to conductors of the telecommunications cable; and

(e) means for shielding conductors of the telecommunications cable from high frequency radiation.

Fig.1.
PRIOR ART

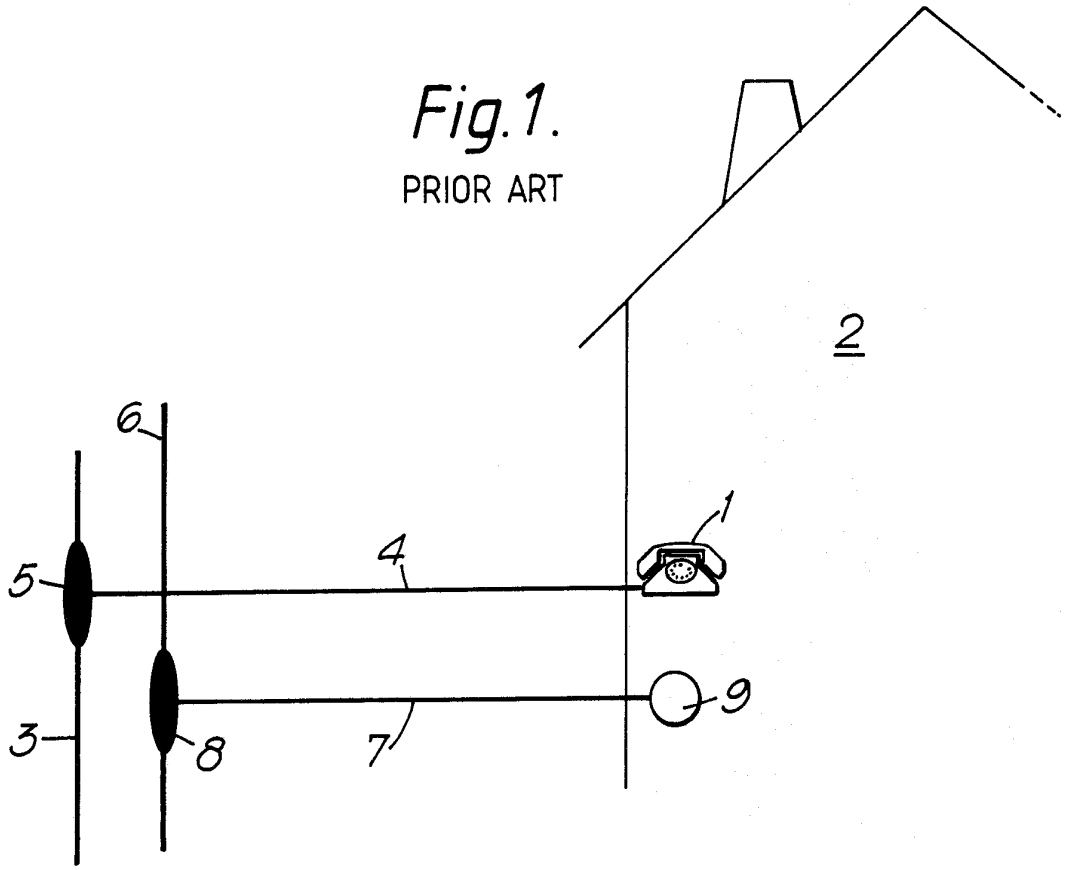

Fig.2.

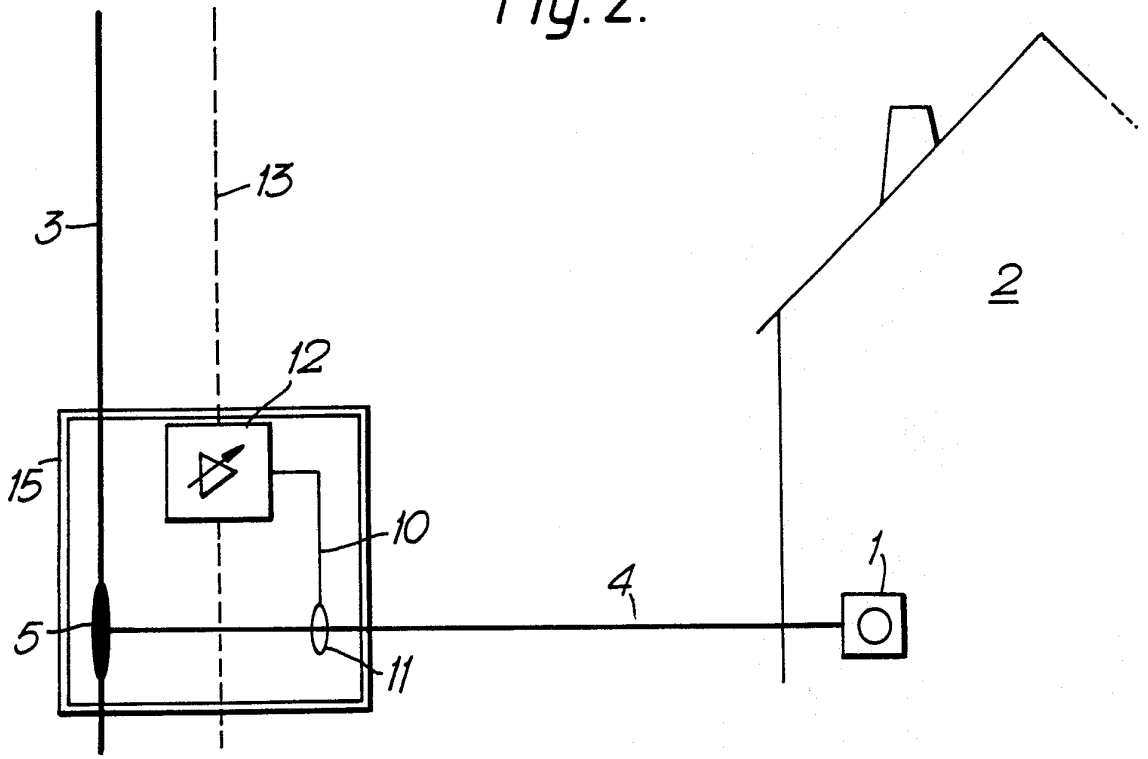

Fig.3A.

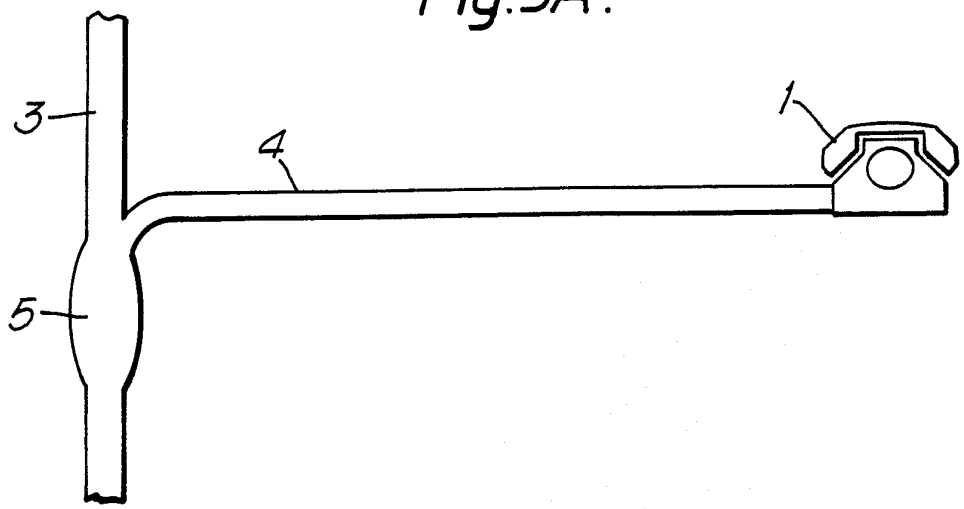

Fig.3B.

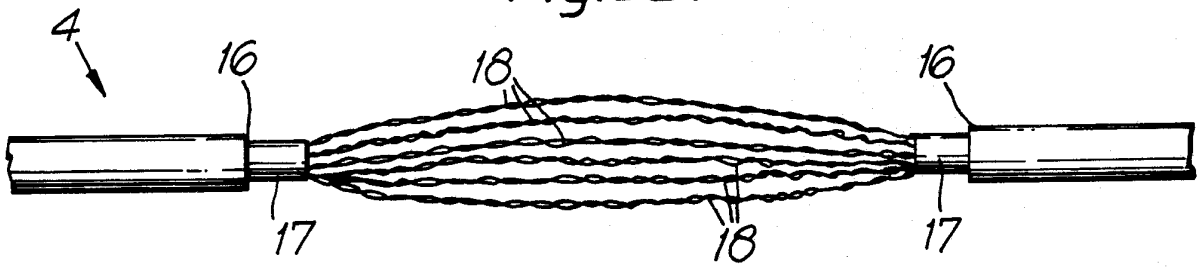

Fig.3C.

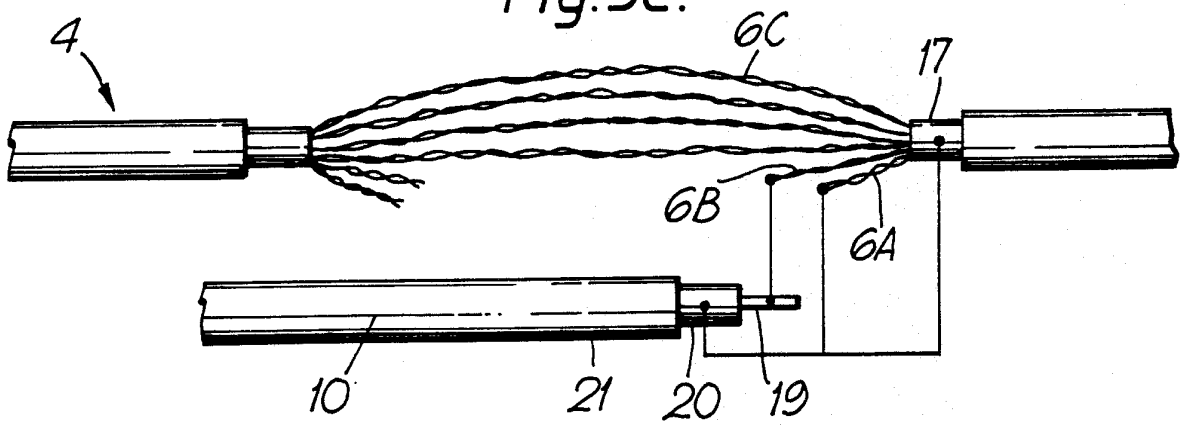

Fig.4A.

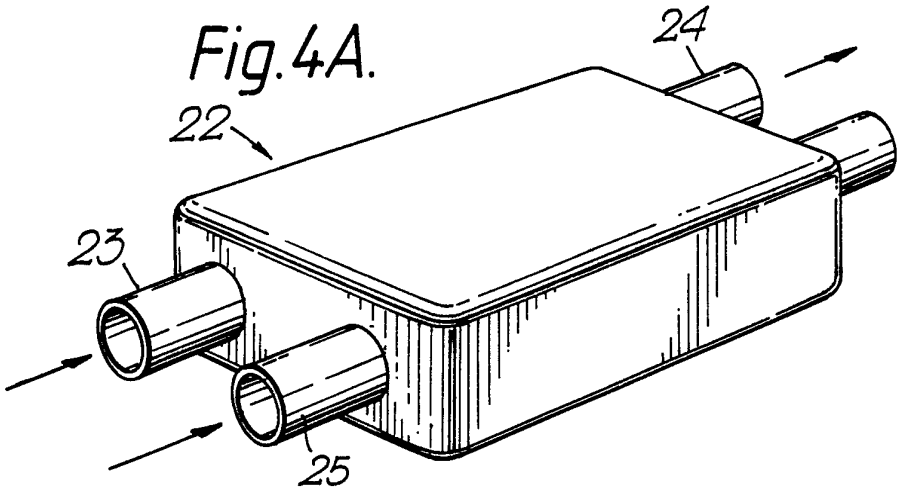

Fig.4B.

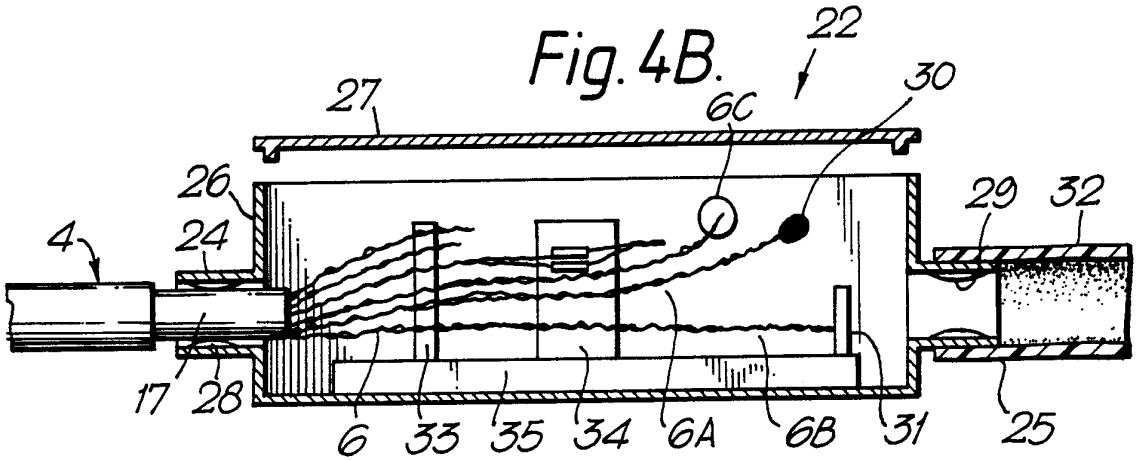

Fig.5.

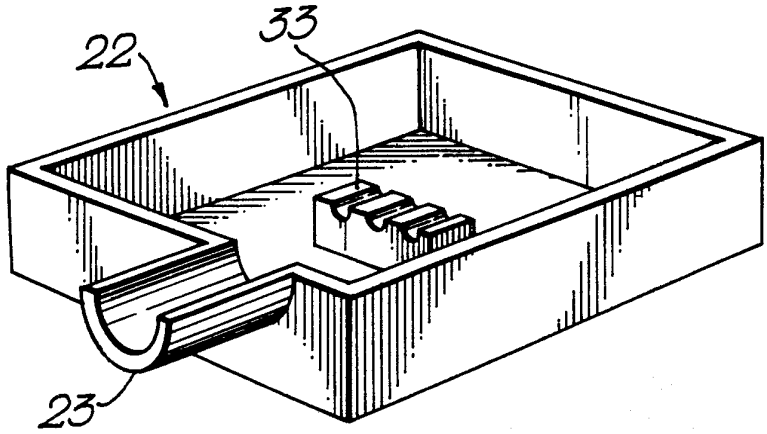

INTERNATIONAL SEARCH REPORT

International Application No PCT/GB 90/01680

I. CLASSIFICATION OF SUBJECT MATTER (if several classification symbols apply, indicate all)[6]

According to International Patent Classification (IPC) or to both National Classification and IPC

IPC5: H 04 B 3/00

II. FIELDS SEARCHED

Minimum Documentation Searched[7]

Classification System	Classification Symbols
IPC5	H 04 B, H 04 H, H 04 N

Documentation Searched other than Minimum Documentation to the Extent that such Documents are Included in Fields Searched[8]

III. DOCUMENTS CONSIDERED TO BE RELEVANT[9]

Category *	Citation of Document,[11] with indication, where appropriate, of the relevant passages[12]	Relevant to Claim No.[13]
X	US, A, 4054910 (W.W. CHOU ET AL) 18 October 1977, see column 1, line 1 - column 2, line 7; abstract; figures 1-2; claim 1	1-2,5
Y		7,10,15, 17-21
	--	
X	US, A, 4485400 (J.H. LEMELSON ET AL) 27 November 1984, see column 1, line 1 - column 2, line 3; abstract; claim 1	1-2,5
Y		7,10,15, 17-21
A		22
	--	

* Special categories of cited documents: [10]

"A" document defining the general state of the art which is not considered to be of particular relevance

"E" earlier document but published on or after the international filing date

"L" document which may throw doubts on priority claim(s) or which is cited to establish the publication date of another citation or other special reason (as specified)

"O" document referring to an oral disclosure, use, exhibition or other means

"P" document published prior to the international filing date but later than the priority date claimed

"T" later document published after the international filing date or priority date and not in conflict with the application but cited to understand the principle or theory underlying the invention

"X" document of particular relevance, the claimed invention cannot be considered novel or cannot be considered to involve an inventive step

"Y" document of particular relevance, the claimed invention cannot be considered to involve an inventive step when the document is combined with one or more other such documents, such combination being obvious to a person skilled in the art.

"&" document member of the same patent family

IV. CERTIFICATION

Date of the Actual Completion of the International Search	Date of Mailing of this International Search Report
8th February 1991	21. 02. 91
International Searching Authority	**Signature of Authorized Officer**
EUROPEAN PATENT OFFICE	EPIS M. Peis

III. DOCUMENTS CONSIDERED TO BE RELEVANT (CONTINUED FROM THE SECOND SHEET)

Category *	Citation of Document, with indication, where appropriate, of the relevant passages	Relevant to Claim No
X	GB, A, 1272594 (COMMUNICATIONS PATENTS LIMITED) 3 May 1972, see page 3, line 50 - page 4, line 51; figures 1-4	1,4-7
Y		10,15-21,23-27
	--	
Y	US, A, 4578702 (W.S. CAMPBELL III) 25 March 1986, see abstract; figures 1-6	7,10, 18
A		11-14, 29
	--	
Y	US, A, 4135202 (A.E. CUTLER) 16 January 1979, see abstract; figures 1-3	15-21, 23-25
	--	
Y	US, A, 4891694 (W.I. WAY) 2 January 1990, see abstract; figure 2	15
	--	
Y	GB, A, 1155470 (RAYCHEM CORPORATION) 18 June 1969, see page 2, line 59 - line 64; figures 1-14	20
	--	
Y	US, A, 4768854 (B.D. CAMPBELL ET AL) 6 September 1988, see column 7, line 36 - line 47	26-27
	--	

ANNEX TO THE INTERNATIONAL SEARCH REPORT ON INTERNATIONAL PATENT APPLICATION NO. PCT/GB 90/01680

SA 41872

This annex lists the patent family members relating to the patent documents cited in the above-mentioned international search report.
The members are as contained in the European Patent Office EDP file on 28/12/90
The European Patent office is in no way liable for theseparticulars which are merely given for the purpose of information.

Patent document cited in search report	Publication date	Patent family member(s)		Publication date
US-A- 4054910	18/10/77	NONE		
US-A- 4485400	27/11/84	NONE		
GB-A- 1272594	03/05/72	BE-A-	737166	16/01/70
		CH-A-	495093	15/08/70
		DE-A-B-C	1940497	26/02/70
		FR-A-B-	2015405	24/04/70
		NL-A-	6912044	11/02/70
		SE-B-C-	383816	29/03/76
		US-A-	3693090	19/09/72
US-A- 4578702	25/03/86	NONE		
US-A- 4135202	16/01/79	AU-D-	7590574	03/06/76
		CA-A-	1058293	10/07/79
		GB-A-	1486421	21/09/77
US-A- 4891694	02/01/90	NONE		
GB-A- 1155470	18/06/69	BE-A-	689224	14/04/67
		CH-A-	455900	00/00/00
		DE-A-	1525815	05/08/71
		NL-A-	6615467	05/05/67
		US-A-	3455336	15/07/69
US-A- 4768854	06/09/88	AU-B-	591505	07/12/89
		AU-D-	6007886	15/01/87
		EP-A-	0209329	21/01/87
		GB-A-B-	2177815	28/01/87
		JP-A-	62014609	23/01/87
		US-A-	4856864	15/08/89