US 20020186409A1

(19) **United States**

(12) **Patent Application Publication** (10) **Pub. No.: US 2002/0186409 A1**

Laverty et al. (43) **Pub. Date: Dec. 12, 2002**

(54) **PDF TO POSTSCRIPT CONVERSION OF GRAPHIC IMAGE FILES**

(75) Inventors: **Timothy A. Laverty**, Seattle, WA (US); **Cory E. Klatt**, Edmunds, WA (US); **Brent A. Krum**, Redmond, WA (US)

Correspondence Address:
BEYER WEAVER & THOMAS LLP
P.O. BOX 778
BERKELEY, CA 94704-0778 (US)

(73) Assignee: **ImageX.com, Inc.**, Bellevue, WA

(21) Appl. No.: **10/100,805**

(22) Filed: **Mar. 18, 2002**

Related U.S. Application Data

(63) Continuation of application No. 09/480,333, filed on Jan. 10, 2000, now Pat. No. 6,362,895.

Publication Classification

(51) **Int. Cl.**[7] **G06K 15/02**; G06F 15/00; G06K 13/00; G06F 17/00

(52) **U.S. Cl.** **358/1.15**; 707/500; 358/1.18

(57) **ABSTRACT**

An on-line automated printing system quickly produces consistent printed materials. The system includes front-end customer setup and product setup modules available on a web server. A Print Ready File is produced embodying the product to be printed. The Print Ready File is compiled and all operations on the file can be completed via reference to the information contained therein. A state flag is associated with each element of the file, the flag having states such as preview, print, both, or none. The file is stored on an asset management file server. The file (unchanged) may be previewed or printed using internal flags and logic built-in to the PostScript language. A batcher service batches print jobs. A plater service accepts the Print Ready Files and outputs a plate file to a print vendor's ordering system. Over the Internet the plate file is sent to a vendor computer. The plate file is sent to a raster image processor (RIP) which outputs a bitmap to be printed. Included within the system is a PDF to PostScript conversion subsystem. A client application requests conversion of a file to PostScript and pulls conversion parameters from an image logic information database. The client sends the parameters along with input and output files to a master service. The master service selects a lower-level service for conversion. A PDF to PostScript conversion module (with hardcoded parameters) uses the PDF library to perform conversion of the file and outputs the result.

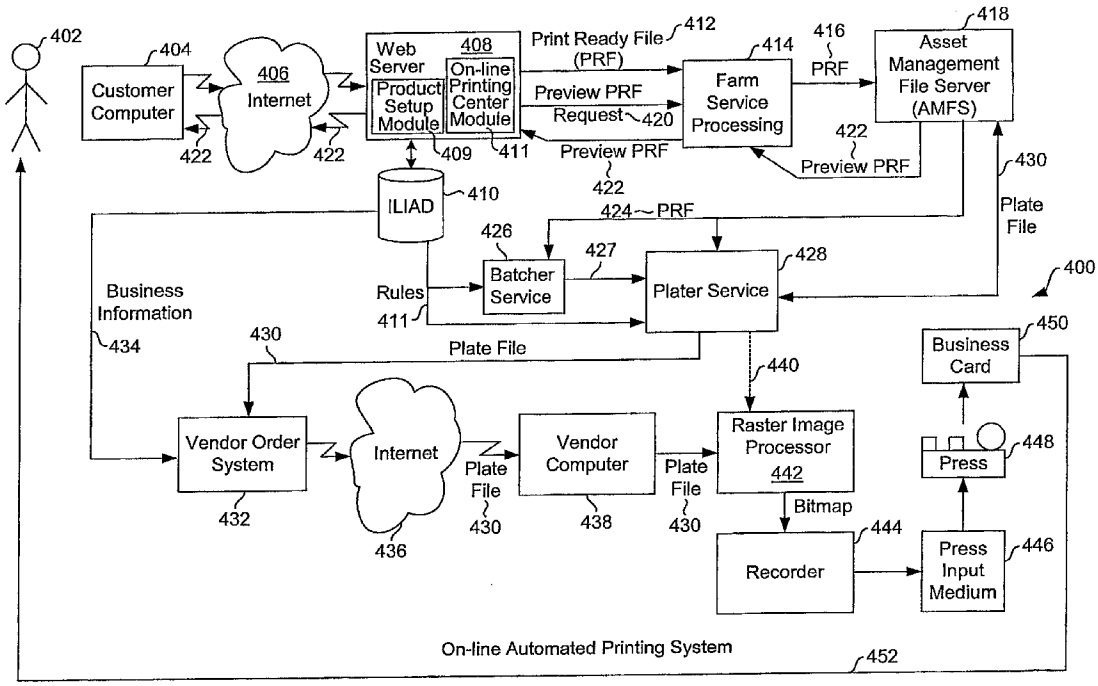

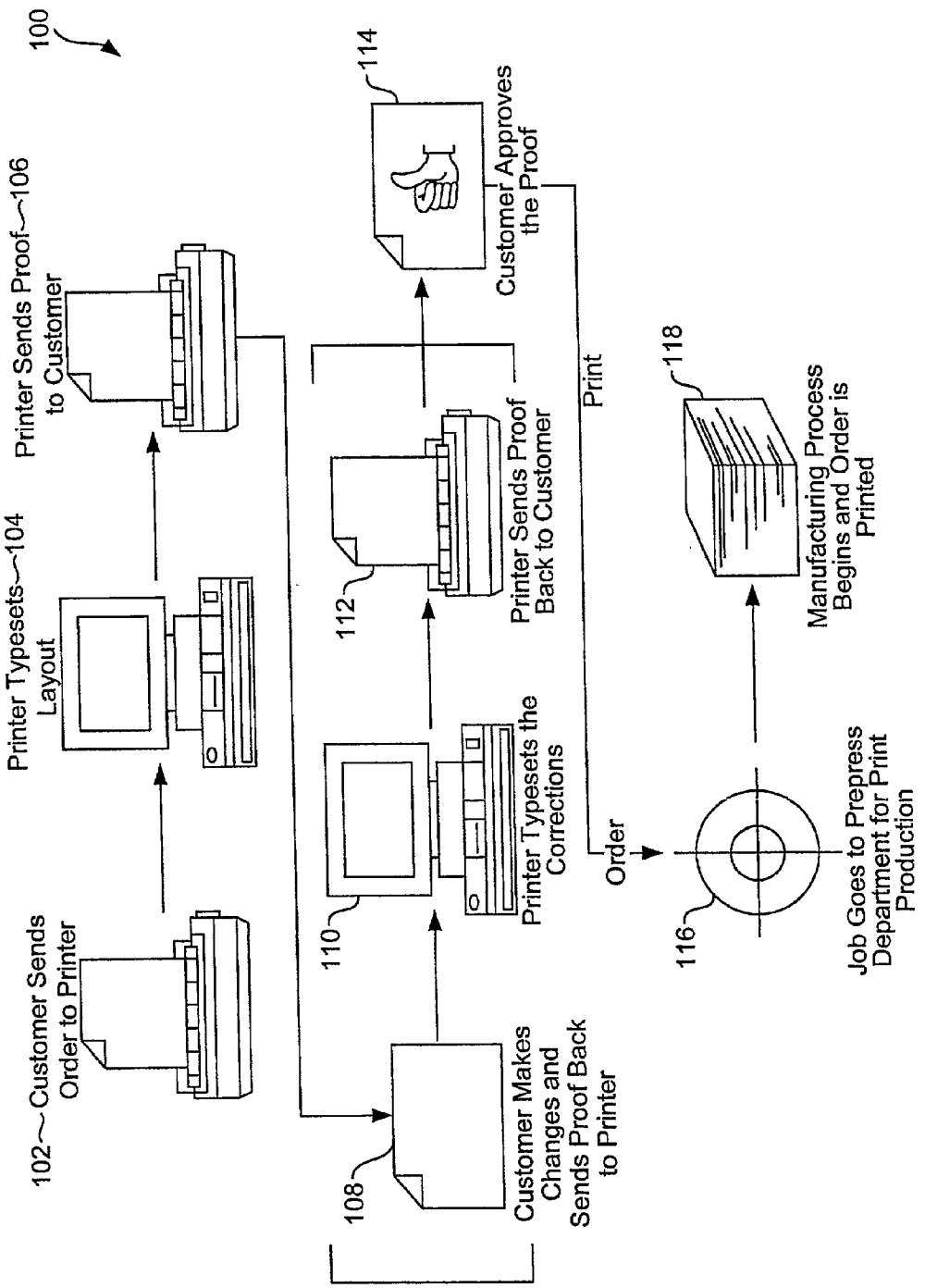

FIG. 1 (Prior Art)

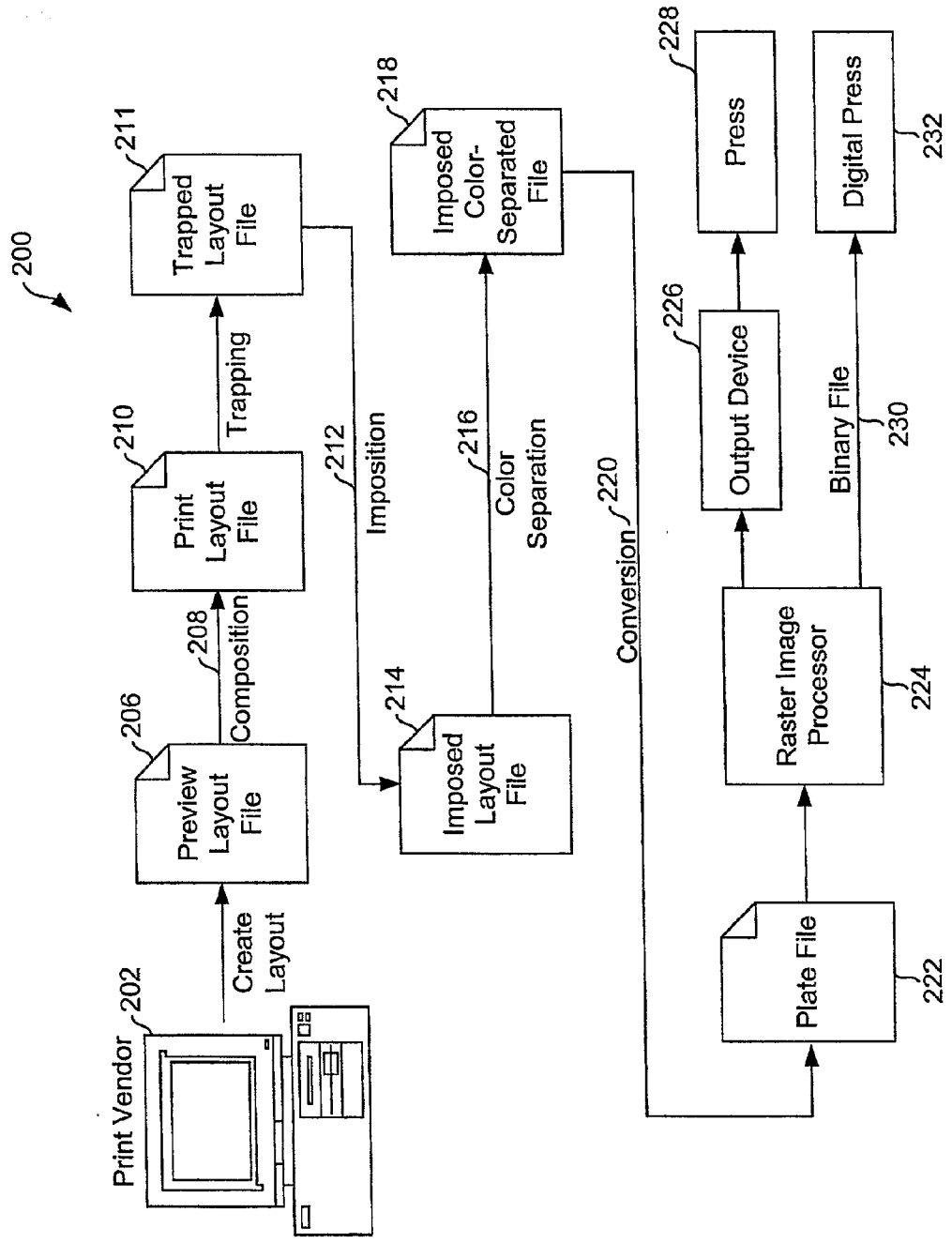

FIG. 2 (Prior Art)

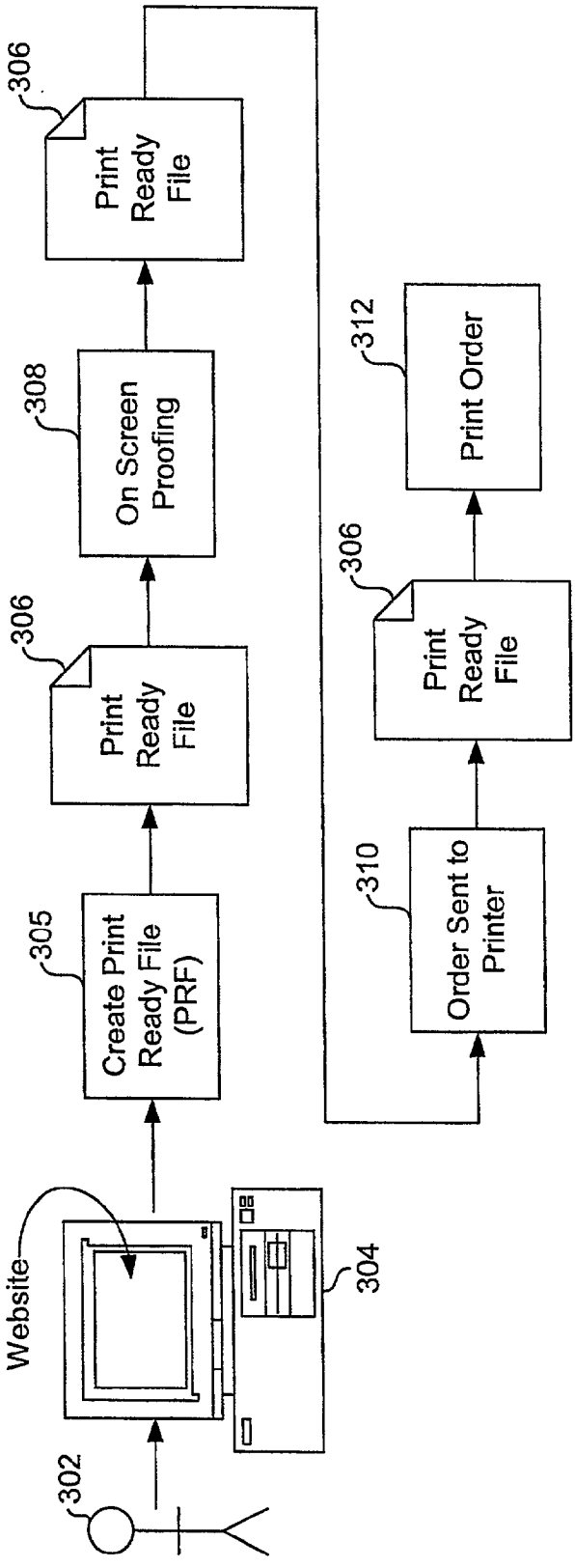

On-line Automated Printing System Overview

FIG. 3

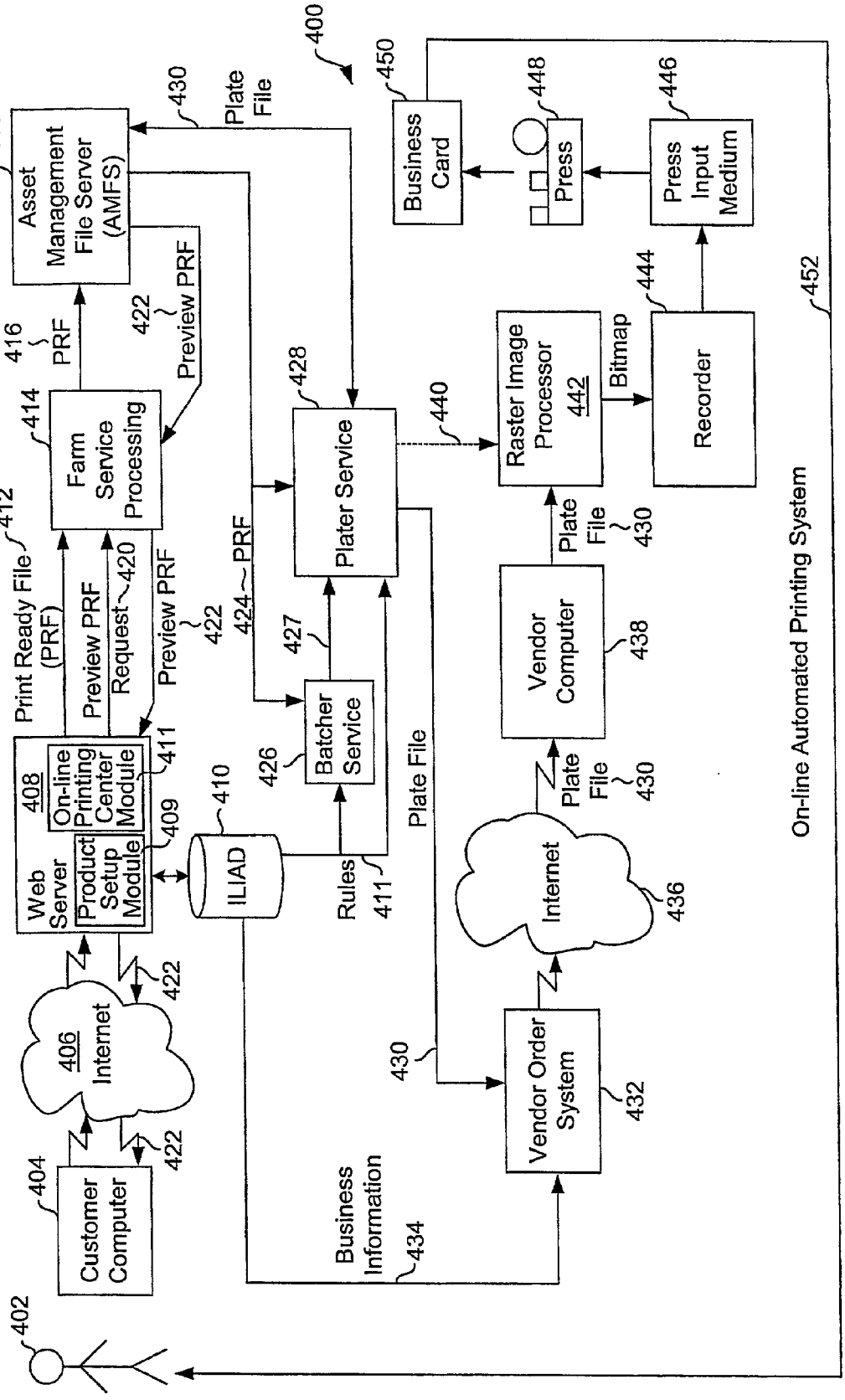
400
402
404
Customer Computer
406
Internet
408
Web Server
On-line Printing Center Module
Product Setup Module
409
410
ILIAD
411
Rules
412
Print Ready File (PRF)
414
Farm Service Processing
416
PRF
418
Asset Management File Server (AMFS)
420
Request
422
Preview PRF
424
PRF
426
Batcher Service
427
428
Plater Service
430
Plate File
432
Vendor Order System
434
Business Information
436
Internet
438
Vendor Computer
440
442
Raster Image Processor
Bitmap
444
Recorder
446
Press Input Medium
448
Press
450
Business Card
452
On-line Automated Printing System

FIG. 4

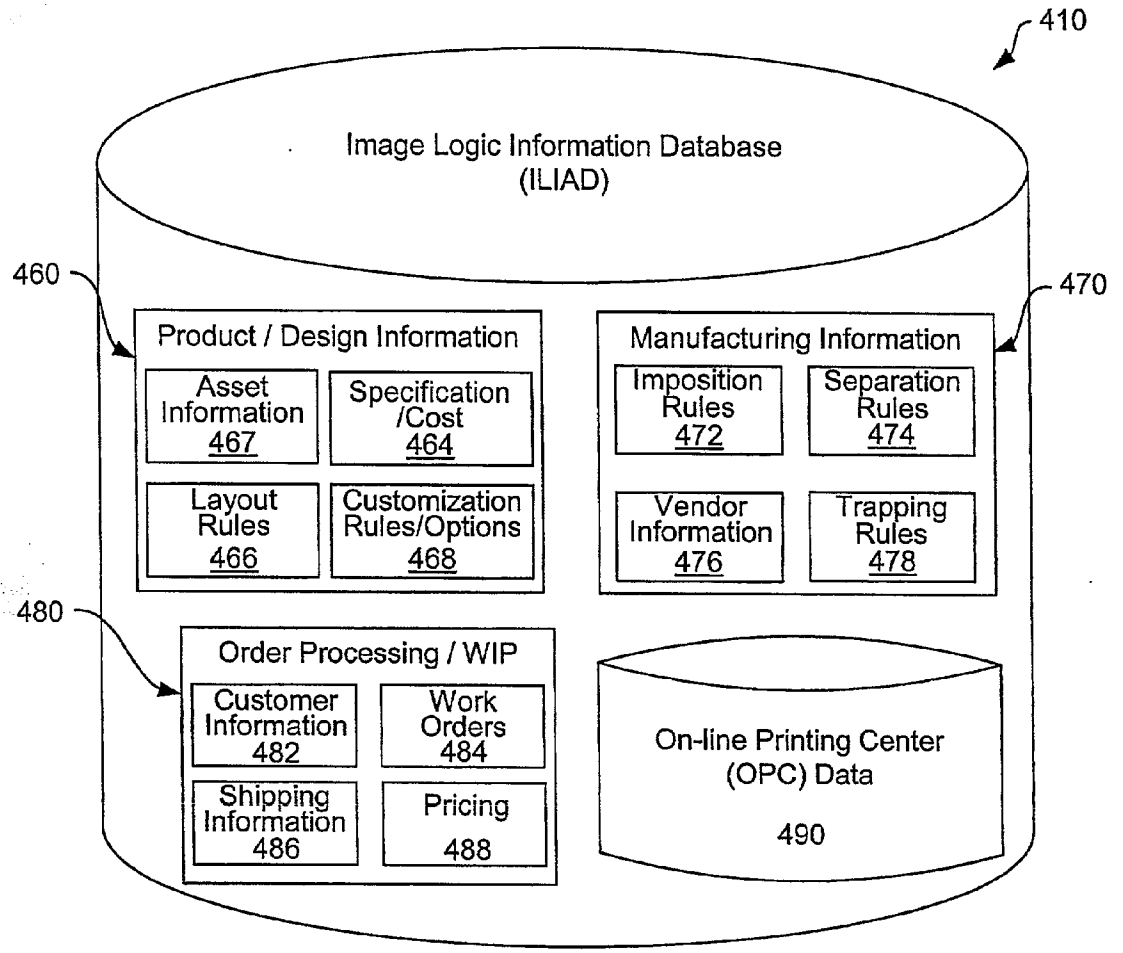
410
Image Logic Information Database
(ILIAD)
460
470
Product / Design Information
Asset Information 467
Specification /Cost 464
Layout Rules 466
Customization Rules/Options 468
Manufacturing Information
Imposition Rules 472
Separation Rules 474
Vendor Information 476
Trapping Rules 478
480
Order Processing / WIP
Customer Information 482
Work Orders 484
Shipping Information 486
Pricing 488
On-line Printing Center (OPC) Data
490

FIG. 5

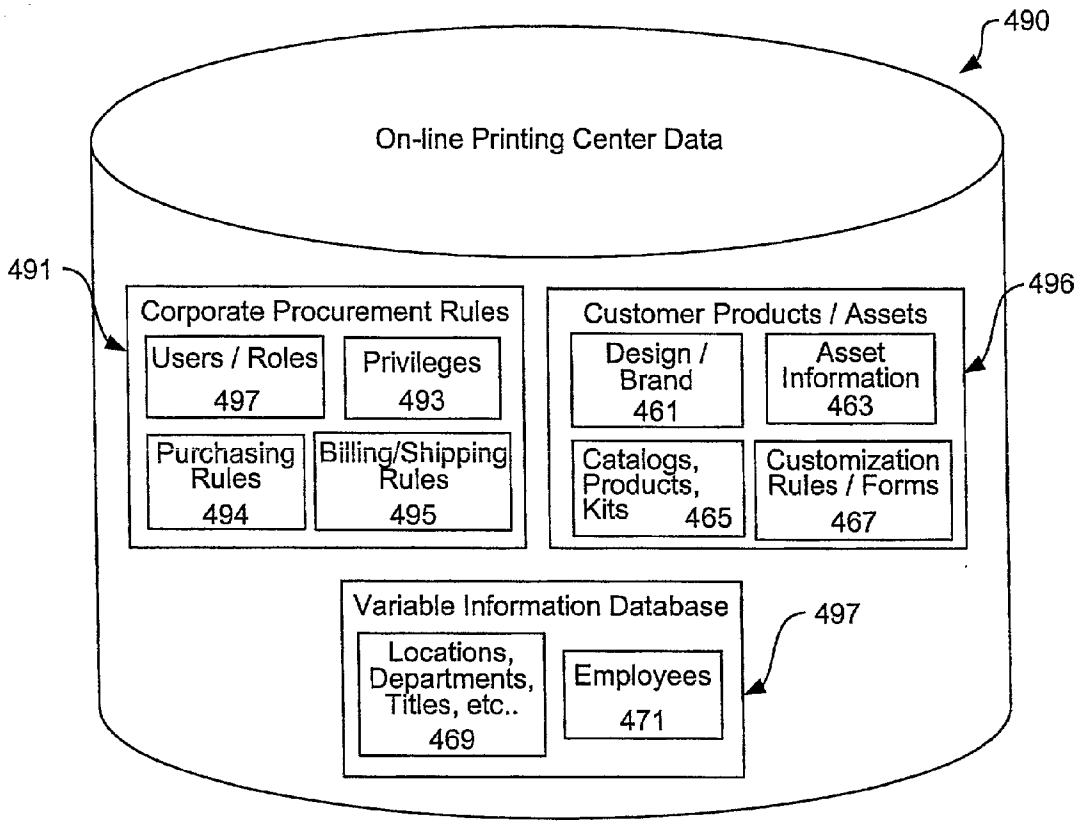
490
On-line Printing Center Data
491
Corporate Procurement Rules
Users / Roles
497
Privileges
493
Purchasing Rules
494
Billing/Shipping Rules
495
496
Customer Products / Assets
Design / Brand
461
Asset Information
463
Catalogs, Products, Kits
465
Customization Rules / Forms
467
Variable Information Database
497
Locations, Departments, Titles, etc..
469
Employees
471

FIG. 6

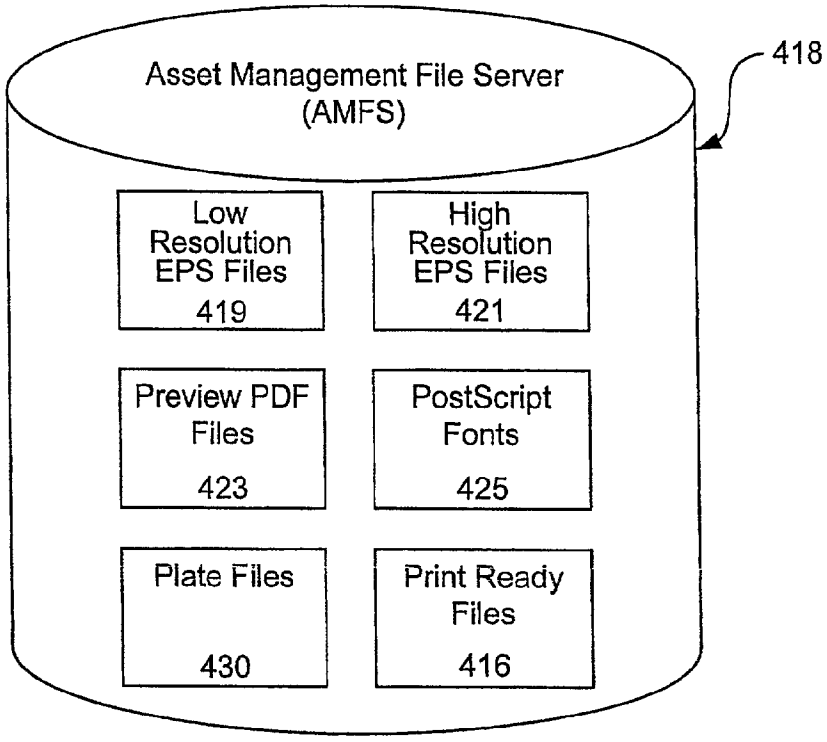
Asset Management File Server
(AMFS)
418
Low Resolution EPS Files
419
High Resolution EPS Files
421
Preview PDF Files
423
PostScript Fonts
425
Plate Files
430
Print Ready Files
416

FIG. 7

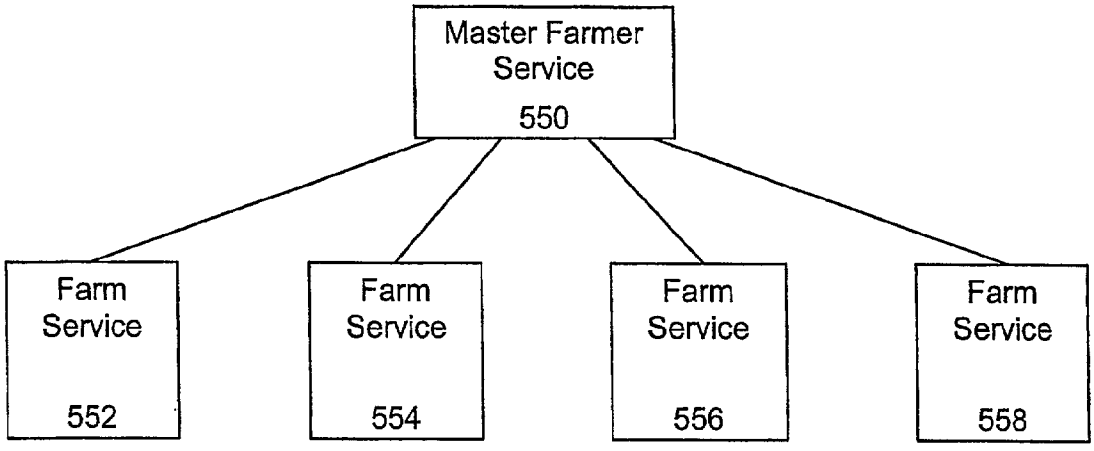
Master Farmer Service
550
Farm Service
552
Farm Service
554
Farm Service
556
Farm Service
558

FIG. 8

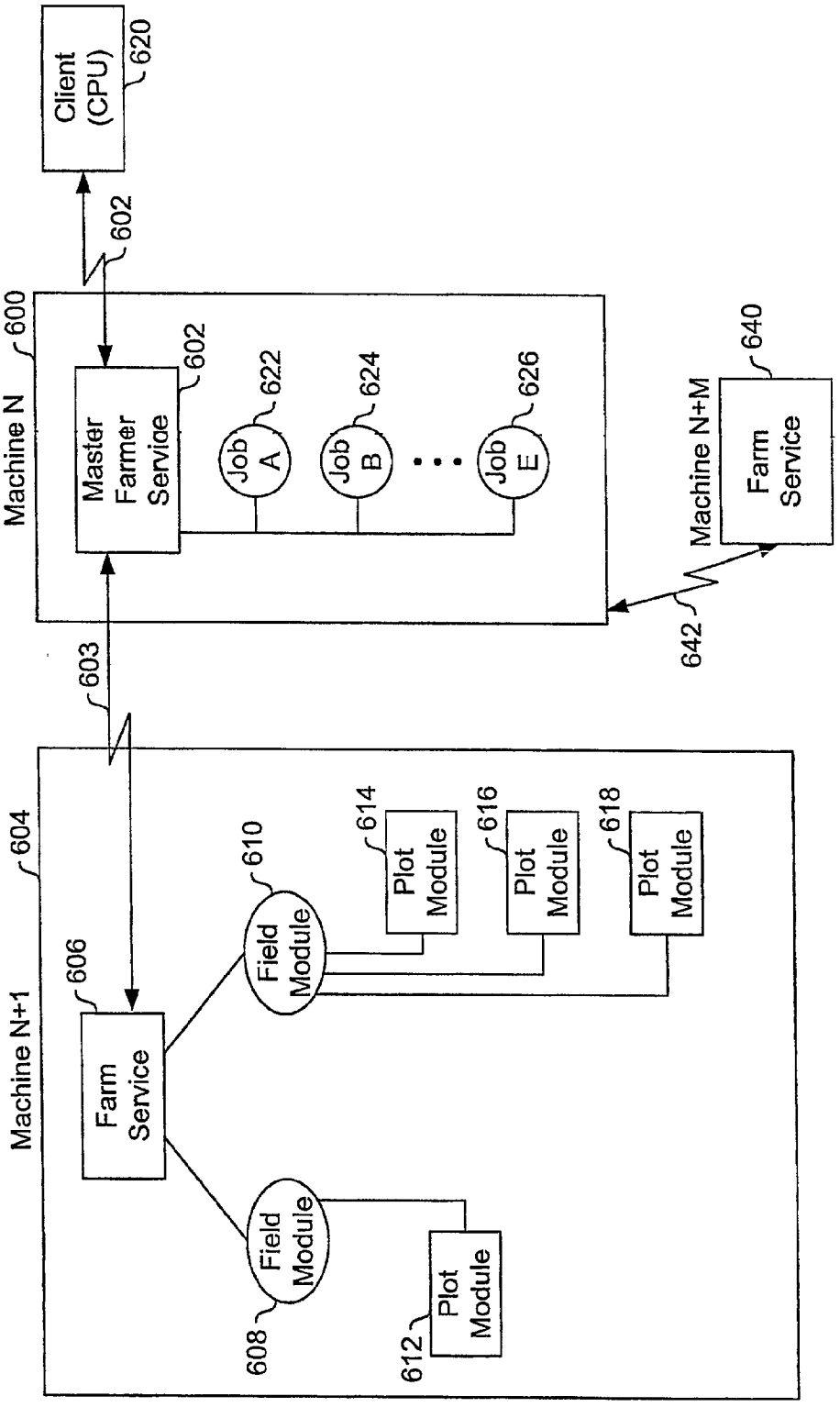
Client (CPU)
620
602
Machine N
600
Master Farmer Service
602
Job A
622
Job B
624
Job E
626
603
Machine N+M
640
Farm Service
642
Machine N+1
604
Farm Service
606
Field Module
610
Plot Module
614
Plot Module
616
Plot Module
618
Field Module
608
Plot Module
612

FIG. 9

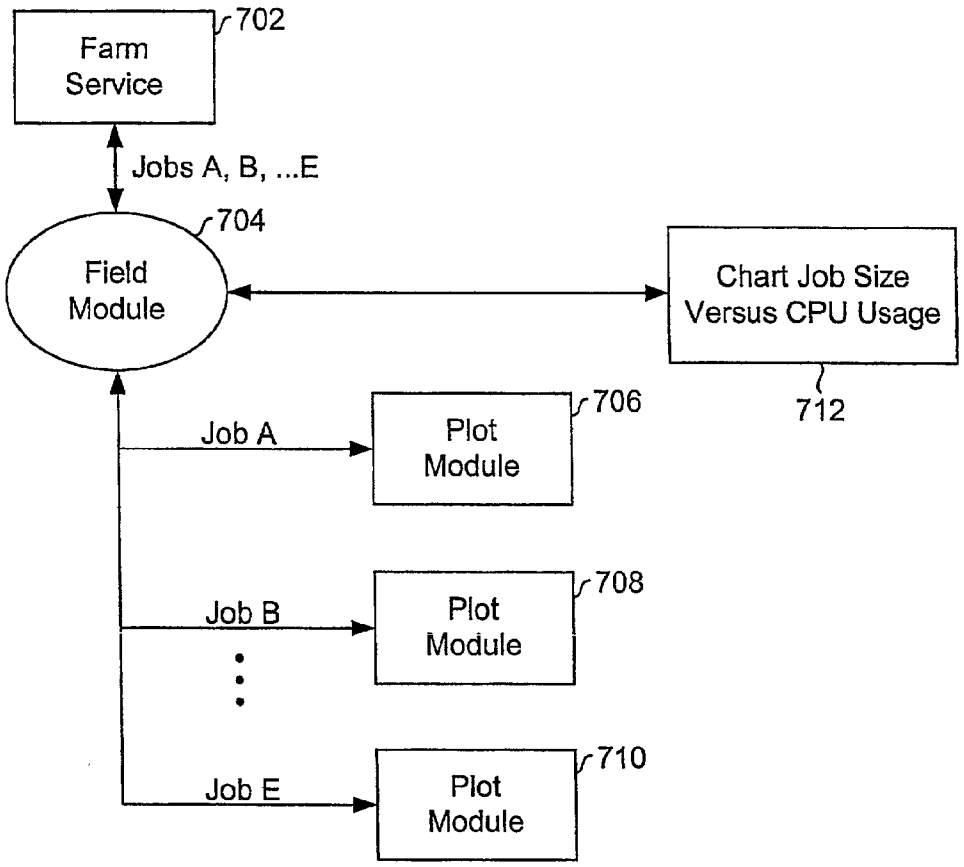
Farm Service
702
Jobs A, B, ...E
704
Field Module
Chart Job Size Versus CPU Usage
712
Job A
Plot Module
706
Job B
Plot Module
708
Job E
Plot Module
710

FIG. 10

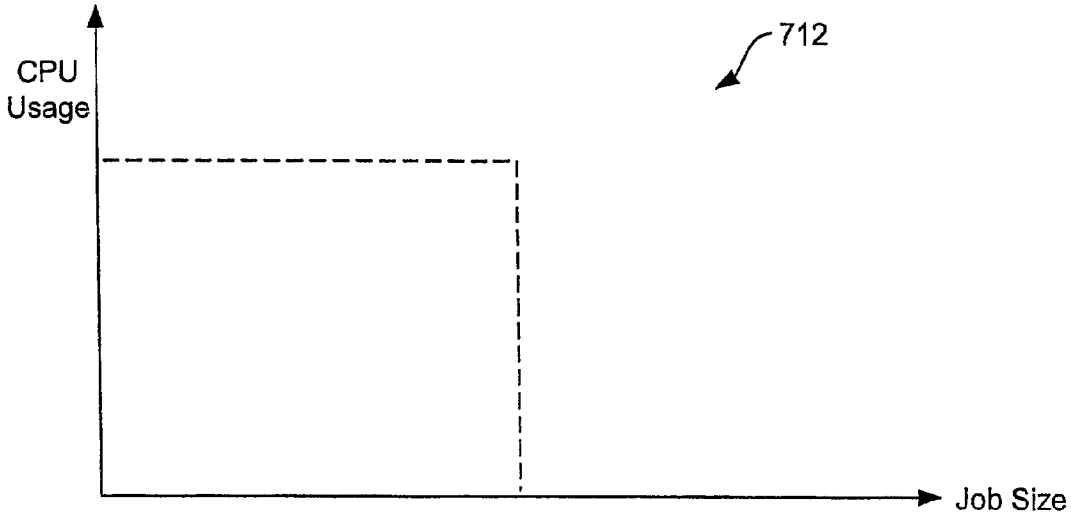
712
CPU Usage
Job Size

FIG. 11

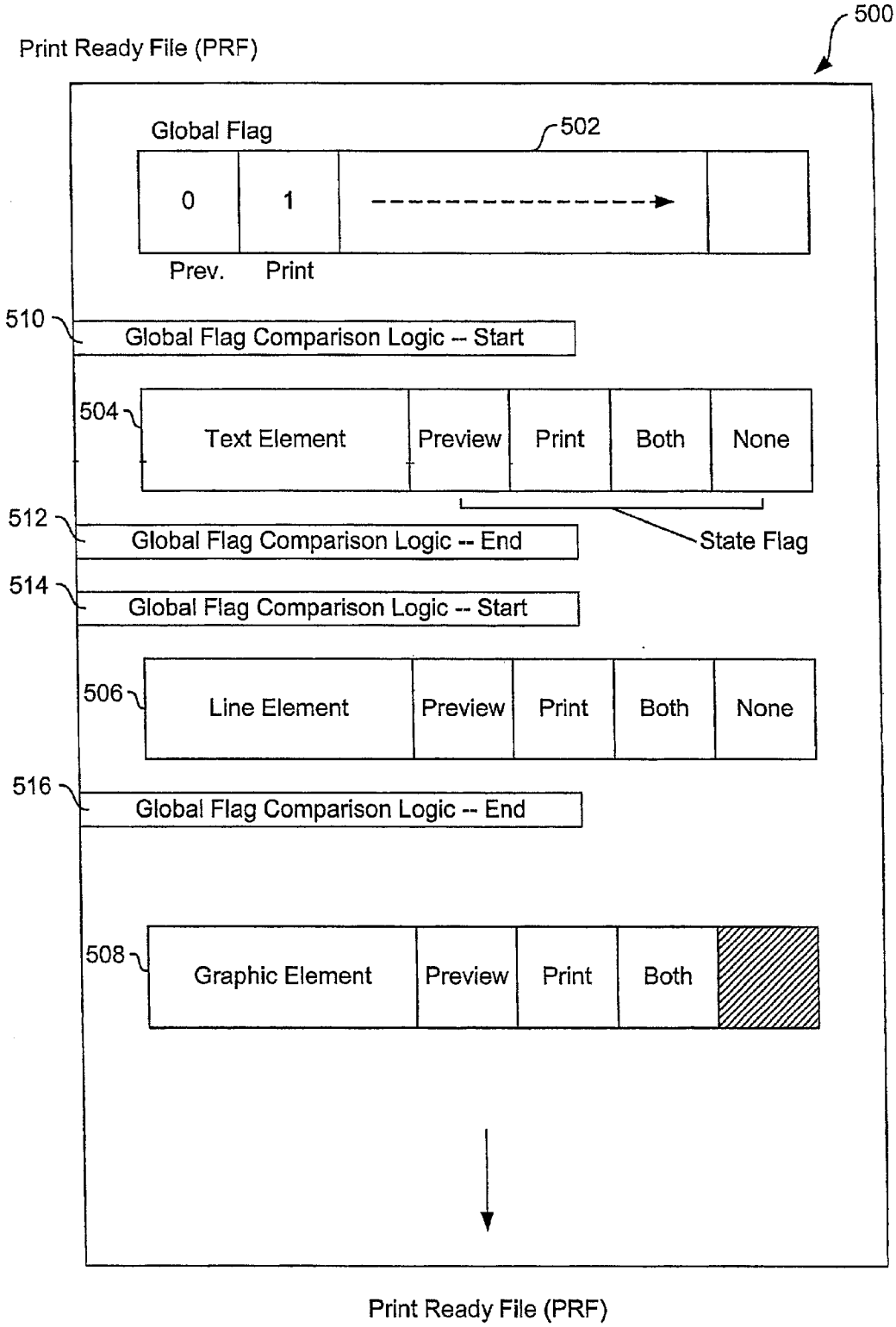
500
Print Ready File (PRF)
Global Flag
502
0
1
Prev.
Print
510
Global Flag Comparison Logic -- Start
504
Text Element
Preview
Print
Both
None
512
Global Flag Comparison Logic -- End
State Flag
514
Global Flag Comparison Logic -- Start
506
Line Element
Preview
Print
Both
None
516
Global Flag Comparison Logic -- End
508
Graphic Element
Preview
Print
Both
Print Ready File (PRF)

FIG. 12

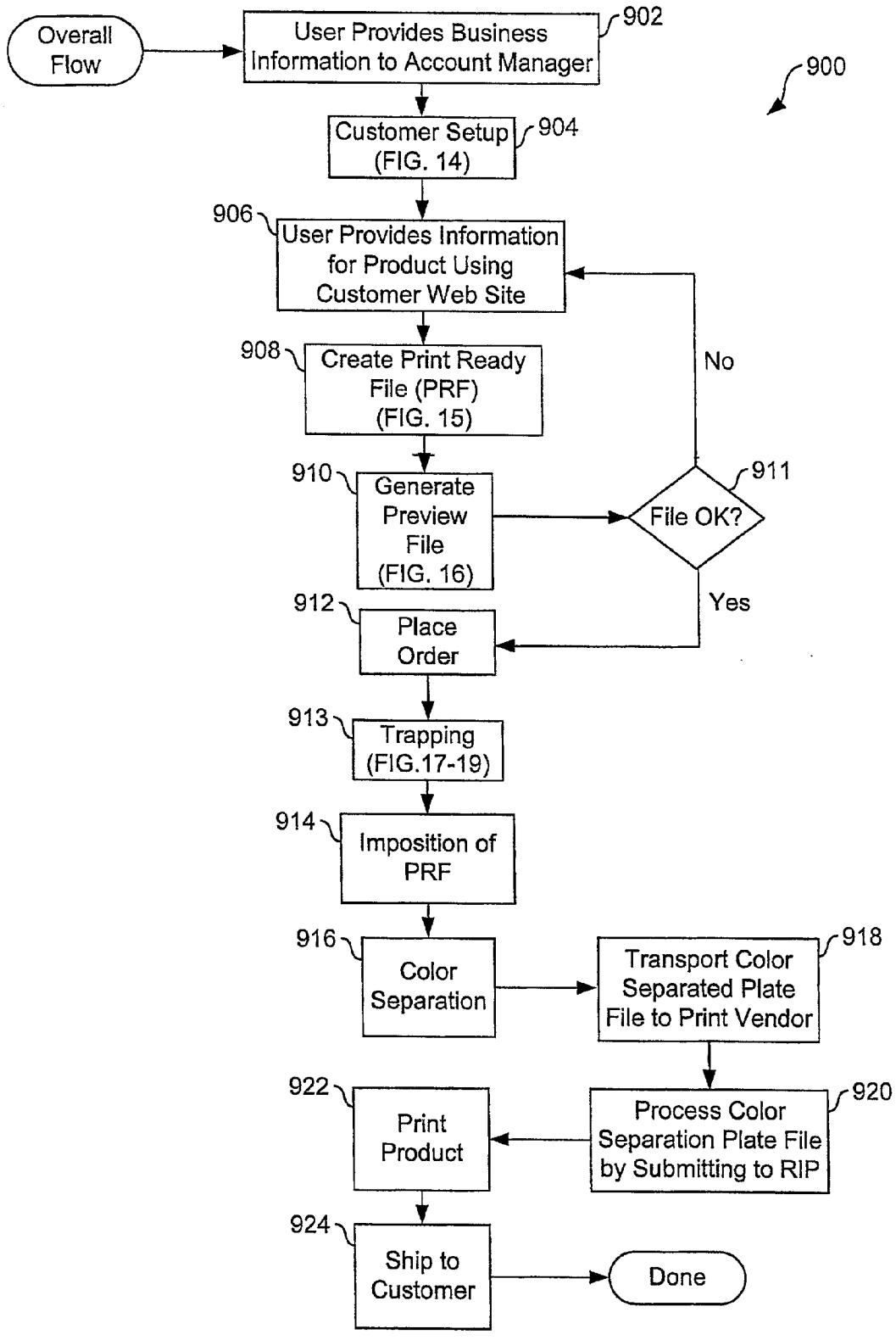
Overall Flow
User Provides Business Information to Account Manager
902
900
Customer Setup (FIG. 14)
904
906
User Provides Information for Product Using Customer Web Site
908
Create Print Ready File (PRF) (FIG. 15)
No
910
Generate Preview File (FIG. 16)
911
File OK?
Yes
912
Place Order
913
Trapping (FIG.17-19)
914
Imposition of PRF
916
Color Separation
Transport Color Separated Plate File to Print Vendor
918
922
Print Product
Process Color Separation Plate File by Submitting to RIP
920
924
Ship to Customer
Done

FIG. 13

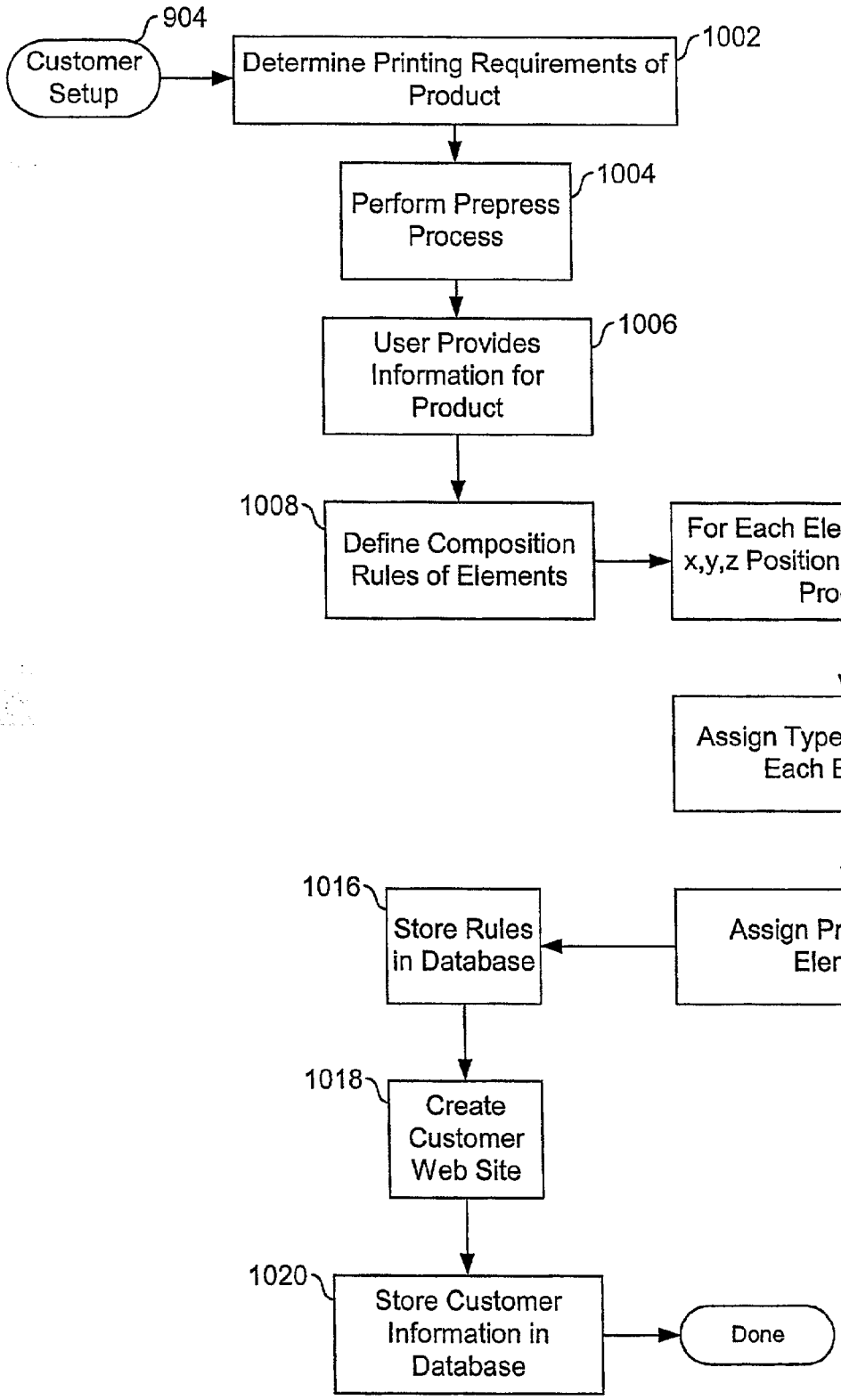
904
Customer Setup
Determine Printing Requirements of Product
1002
Perform Prepress Process
1004
User Provides Information for Product
1006
1008
Define Composition Rules of Elements
For Each Element: Define x,y,z Position of Element in Product
1010
Assign Type and State to Each Element
1012
Assign Properties to Elements
1014
1016
Store Rules in Database
1018
Create Customer Web Site
1020
Store Customer Information in Database
Done

FIG. 14

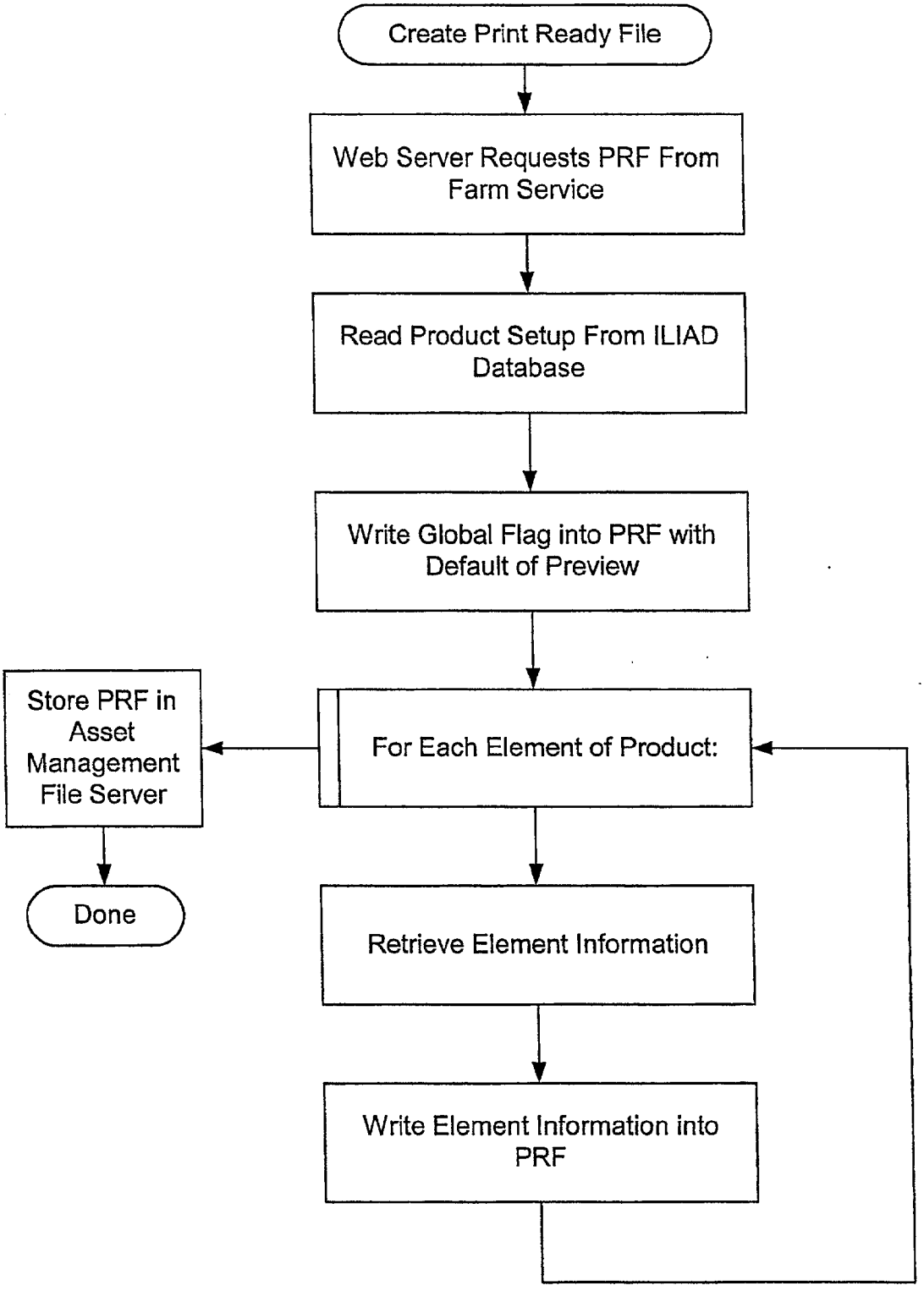
Create Print Ready File
Web Server Requests PRF From Farm Service
Read Product Setup From ILIAD Database
Write Global Flag into PRF with Default of Preview
For Each Element of Product:
Retrieve Element Information
Write Element Information into PRF
Store PRF in Asset Management File Server
Done

FIG. 15

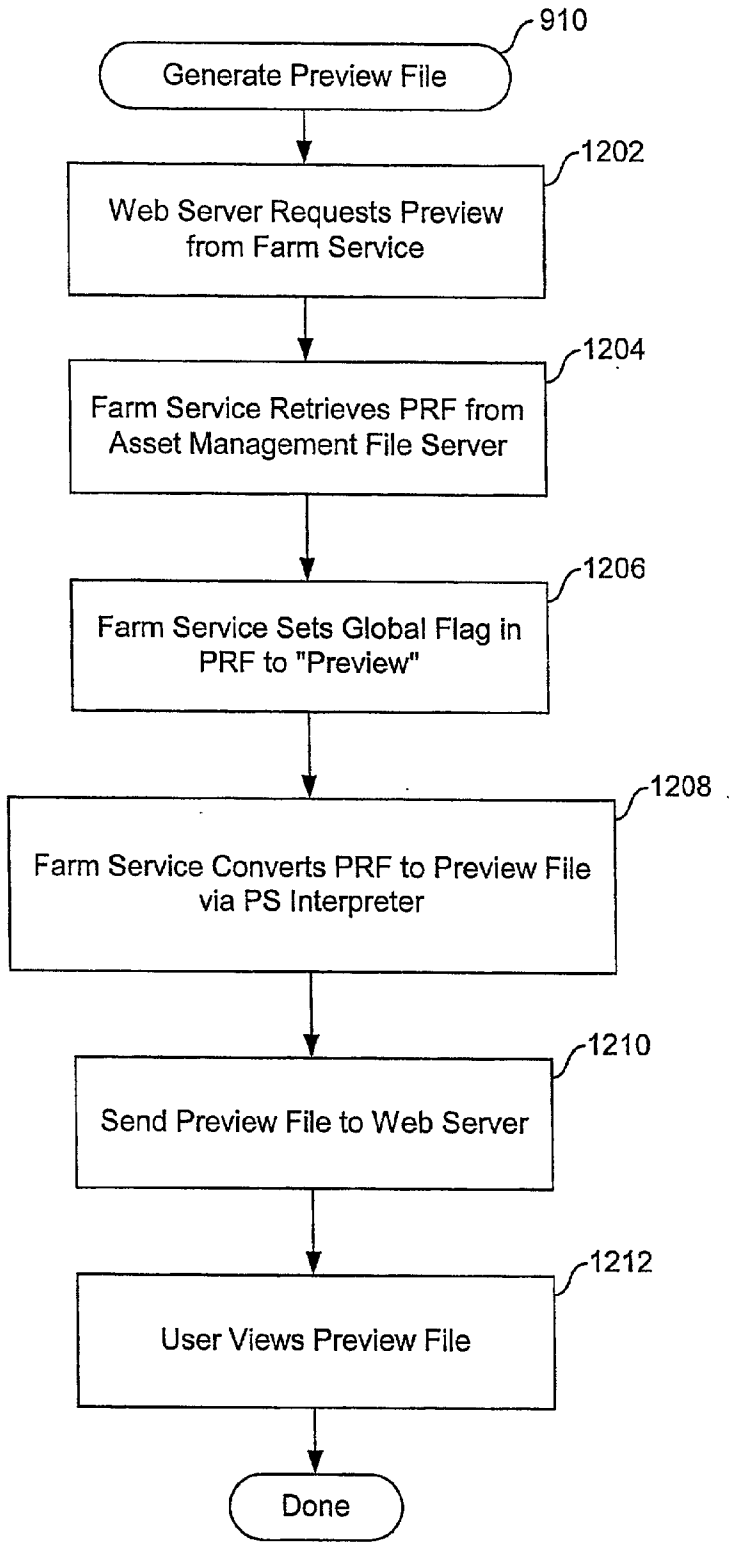
910
Generate Preview File
1202
Web Server Requests Preview from Farm Service
1204
Farm Service Retrieves PRF from Asset Management File Server
1206
Farm Service Sets Global Flag in PRF to "Preview"
1208
Farm Service Converts PRF to Preview File via PS Interpreter
1210
Send Preview File to Web Server
1212
User Views Preview File
Done

FIG. 16

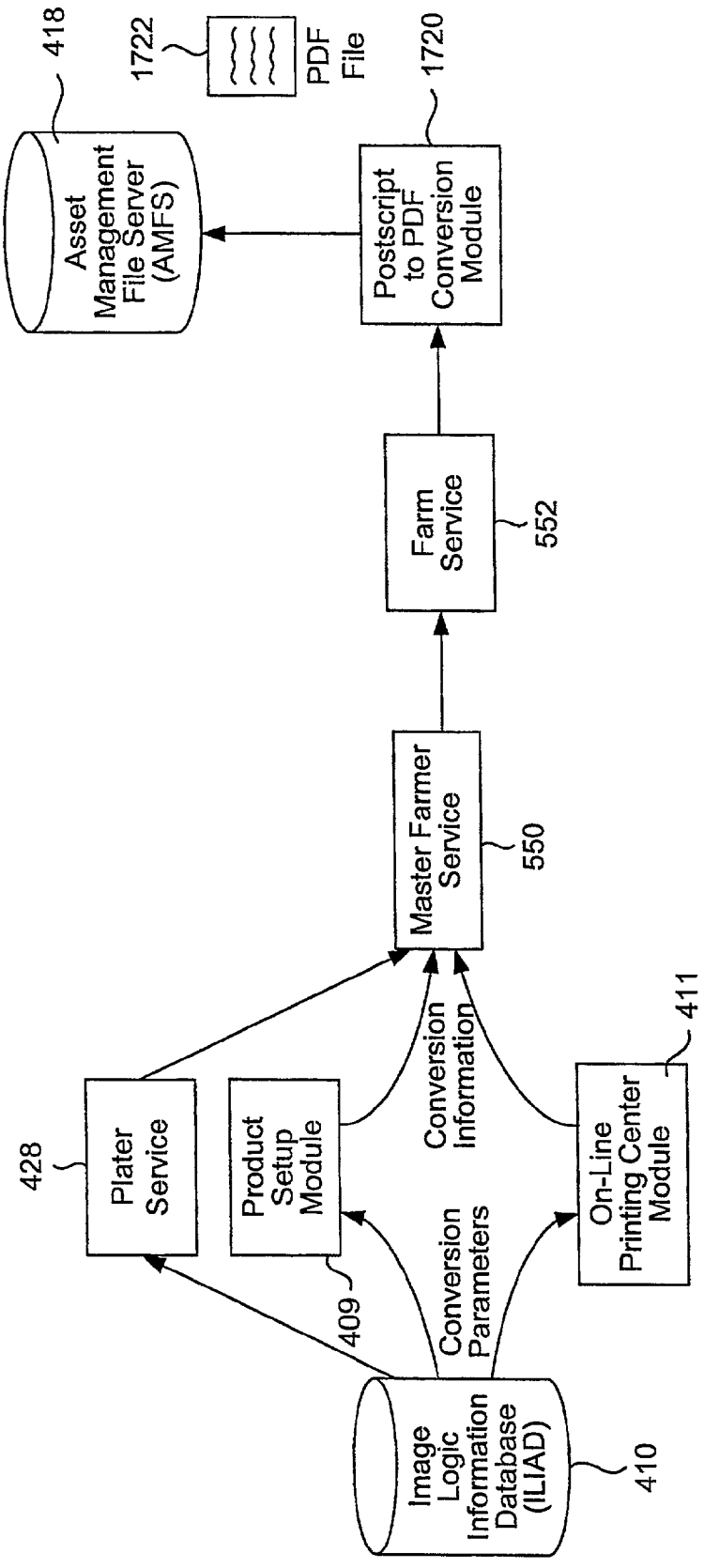
418
Asset Management File Server (AMFS)
1722
PDF File
1720
Postscript to PDF Conversion Module
Farm Service
552
Master Farmer Service
550
428
Plater Service
Product Setup Module
409
Conversion Information
Conversion Parameters
On-Line Printing Center Module
411
Image Logic Information Database (ILIAD)
410
1700
PostScript to PDF Conversion Subsystem

FIG. 17

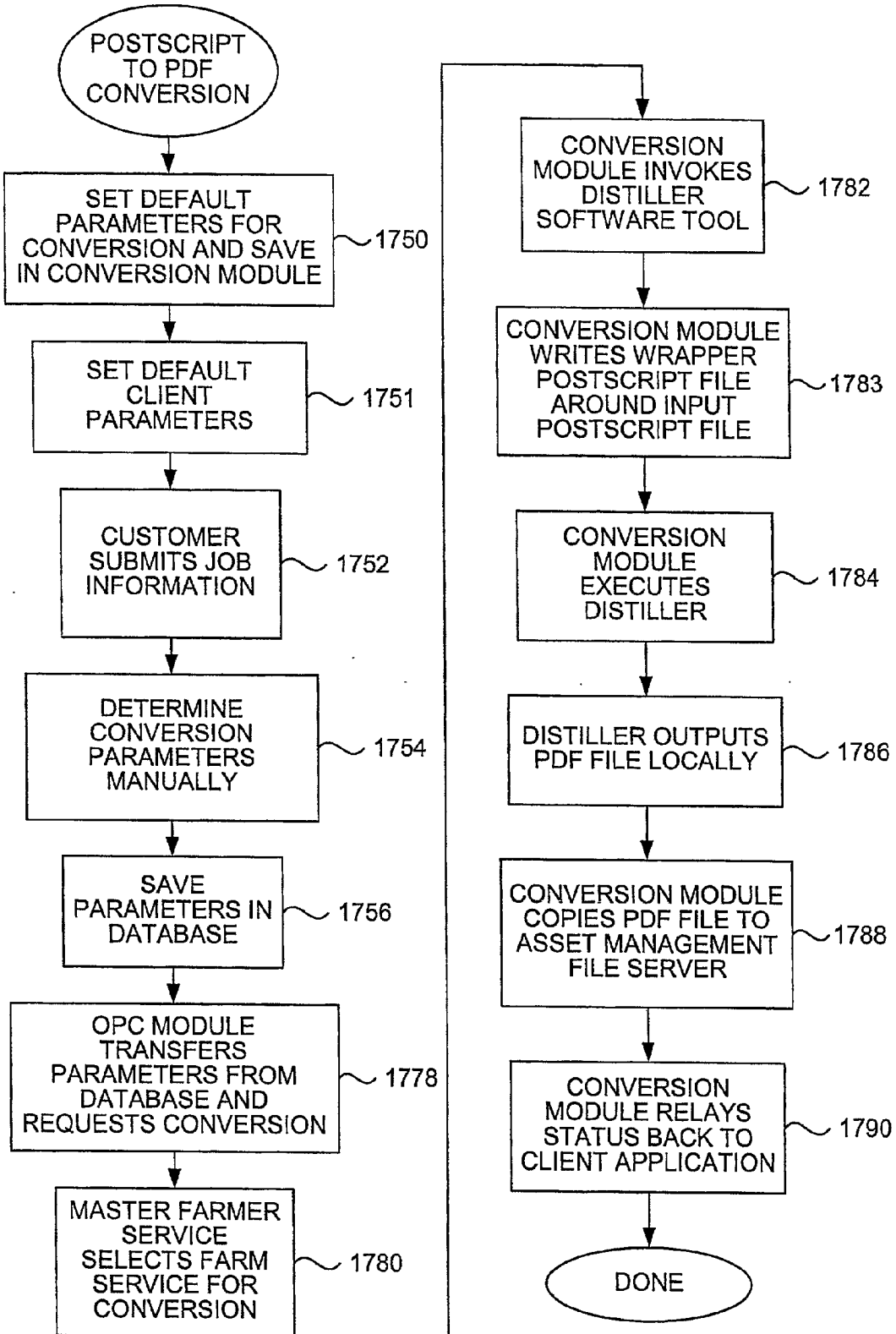
POSTSCRIPT TO PDF CONVERSION
SET DEFAULT PARAMETERS FOR CONVERSION AND SAVE IN CONVERSION MODULE
1750
SET DEFAULT CLIENT PARAMETERS
1751
CUSTOMER SUBMITS JOB INFORMATION
1752
DETERMINE CONVERSION PARAMETERS MANUALLY
1754
SAVE PARAMETERS IN DATABASE
1756
OPC MODULE TRANSFERS PARAMETERS FROM DATABASE AND REQUESTS CONVERSION
1778
MASTER FARMER SERVICE SELECTS FARM SERVICE FOR CONVERSION
1780
CONVERSION MODULE INVOKES DISTILLER SOFTWARE TOOL
1782
CONVERSION MODULE WRITES WRAPPER POSTSCRIPT FILE AROUND INPUT POSTSCRIPT FILE
1783
CONVERSION MODULE EXECUTES DISTILLER
1784
DISTILLER OUTPUTS PDF FILE LOCALLY
1786
CONVERSION MODULE COPIES PDF FILE TO ASSET MANAGEMENT FILE SERVER
1788
CONVERSION MODULE RELAYS STATUS BACK TO CLIENT APPLICATION
1790
DONE

FIG. 18

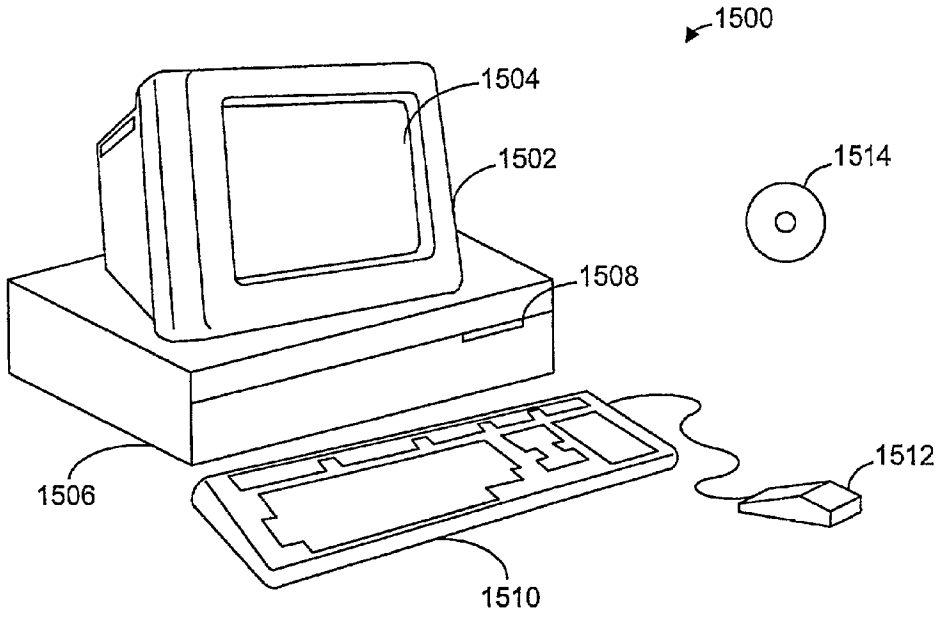

FIG. 19A

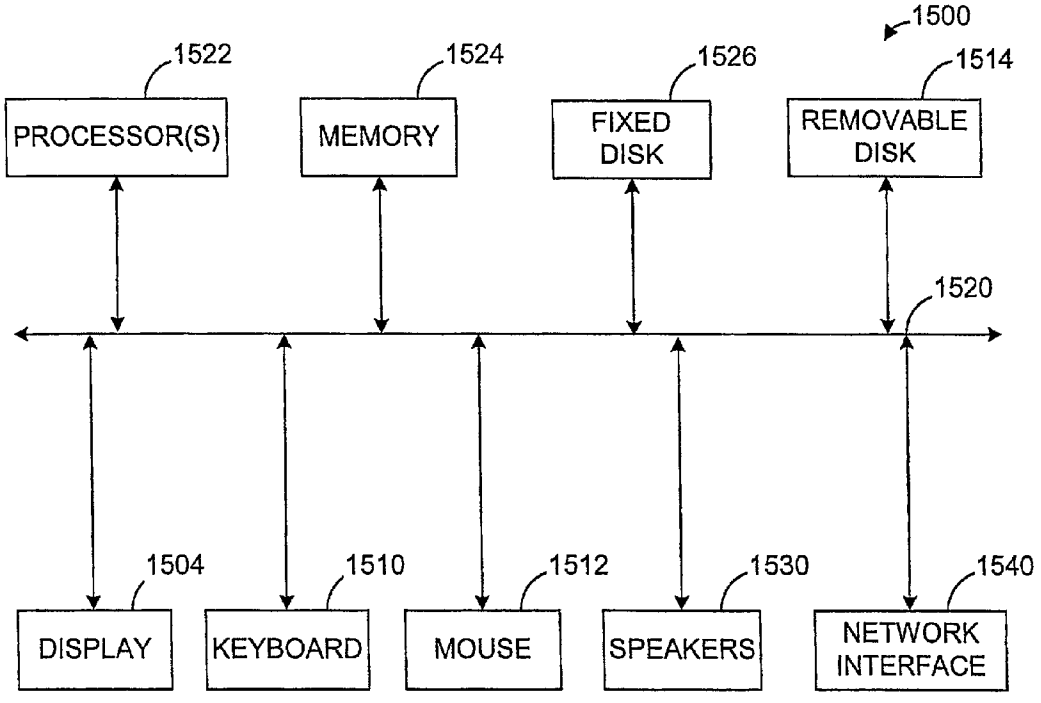

FIG.19B

PDF TO POSTSCRIPT CONVERSION OF GRAPHIC IMAGE FILES

CROSS-REFERENCE TO RELATED APPLICATIONS

[0001] This application is a continuation of U.S. patent application No. 09/480,333, now U.S. Pat. No. 6,362,895, filed Jan. 10, 2000, entitled "PDF TO POSTSCRIPT CONVERSION OF GRAPHIC IMAGE FILES," which is hereby incorporated by reference.

[0002] This application is related to U.S. patent application Ser. Nos. 09/480,334; 09/480,821; 09/481,550; 09/480,332; 09/480,869; 09/480,881; 09/481,372; 09/480,335; 09/480,645; 09/480,185; 09/480,987; 09/480,980; 09/481,007; 09/480,820, now U.S. Pat. No. 6,353,483; 09/481,010; and 09/480,866, all filed on Jan. 10, 2000, which are hereby incorporated by reference. This application is also related to U.S. patent application Ser. No. 09/460,307 filed on Dec. 13, 1999, entitled "System and File Structure for Consistent Visual Medium Materials."

FIELD OF THE INVENTION

[0003] The present invention relates generally to a computer system for quickly and consistently producing printed materials. More specifically, the present invention relates to an automated technique for converting a PDF file to a PostScript file.

BACKGROUND OF THE INVENTION

[0004] The existing methods of procuring printed business materials are characterized by cumbersome and labor-intensive procedures. These procedures carry with them certain inefficiencies and are often prone to error. For the majority of small to medium sized printers, the printing of business cards and stationery entails a time-consuming series of steps which generally must be repeated every time a new order is placed.

[0005] Referring to **FIG. 1, a** representative block diagram **100** is shown of certain steps that might be used to procure an order by a customer. While the order might consist of any textual or graphical material, a business card example is used throughout to facilitate discussion. In general, an administrator in an organization first collects data from the employee who desires the business cards. Such data includes name, title, telephone and facsimile numbers, mobile telephone number, e-mail address, etc. This data then gets sent via telephone or facsimile to the printer as shown in step **102**. The printer typesets the information in step **104**, and then sends back a proof to the administrator in step **106**. The administrator then typically sends the proof to the employee for verification, and receives the returned proof with marked-up corrections. The proof is then sent back to the printer in step **108**. The printer typesets the corrections in step **110** and sends the proof back to the customer in step **112**. Steps **108-112** might be repeated several times until the customer approves the proof in step **114**. After the order is final, the printer must go through several additional steps before the order is printed. For instance, the customer service department might enter the job into the printer's internal tracking and billing system. The job then goes to the prepress department in step **116** which reproduces the content into a format so that it is ready to print. The manufacturing process is applied in step **118** and the order is printed.

[0006] Getting through this series of steps with the printer usually takes several days. Typically, seven to ten days after this process is completed, the cards are received by the employee who ordered them. Because each job is entered manually, a new order for a similar customer may not look precisely like the last one. Add the complexities of a multi-location organization (with many employees) and a relatively simple product purchase can become very complex.

[0007] Moreover, the printing of more complex items, such as full color pamphlets and brochures, results in many more iterations between the design agency, the customer and the prepress department. The iterations due to color correction and perfection of all design elements likely results in even more time required to complete the product. Despite the iterative steps described above, it is estimated that 15% to 30% of print jobs for traditional business materials arrive at the customer with errors. The propensity for errors and the general lack of consistency produced using the traditional process is due in large part to the manual nature of the task. At each step in the process the file may be opened and manipulated repeatedly, which introduces new opportunities for errors and inconsistencies.

[0008] **FIG. 2** illustrates a prior art block diagram **200** of representative steps in the process and describes potential problems that may occur.

Preview

[0009] The process begins with a customer providing the print vendor with the information on the product to be composed. The customer will typically provide the information on an order form, make annotations to a physical sample, and/or communicate the data verbally. The print vendor's job is to create a layout of the print product for the customer to preview and approve. The print vendor will typically interpret the customer's information and compose a preview layout of the product in a publishing tool such as Pagemaker or Quark XPress. In **FIG. 2** this is shown by the print vendor computer **202** creating a preview layout file **206**.

[0010] Unfortunately, this task is made more complicated by a common practice called "mastering". To control costs in printing, it is common to pre-print or "master" stock in bulk with certain static elements. In many cases the static elements are "spot color" or "process color" graphics (while the variable information is usually in a single color, often black). In order to provide a preview of what the printed product will actually look like, the preview layout must contain both the variable information and the mastered elements. Once the preview layout is completed, it is then printed and sent to the customer for their approval.

[0011] The customer then reviews the facsimile of the proof, annotates any changes, sends the proof back to the vendor via facsimile and/or communicates the changes to the vendor verbally. Once the customer approves the preview layout, the vendor begins the prepress process. It is important to note that the "preview" that the customer is approving is a facsimile copy of a low-quality printout. Because the quality is so low, it is possible (even under the

best of conditions) that the final printed product may look slightly different from the proof that the customer approved.

[0012] If the customer is very demanding, these differences may not be acceptable and will require that the vendor re-print the order.

[0013] A number of available software tools can be used by a human operator to create, review, and edit EPS files. However, EPS files that ultimately are output from products such as Illustrator, Quark, Pagemaker, or Photoshop all have certain differences, or eccentricities, which are difficult to account for and process on a consistent basis. Also, they do not ensure referential integrity or consistent settings for color in such files. Some checking may be done to analyze and detect problems in EPS files, however, such checking does nothing to fix or standardize an output EPS file. In addition, as described below, each time a human operator must open a file manually and review it using a particular software program there is the potential for errors to be introduced into the file.

Composition

[0014] Step **208** in **FIG. 2** shows the next process step of composition. In particular, now that the customer has approved the preview, the vendor must create a layout that is suitable for printing. To do this, all of the mastered elements that were included in the preview layout must be removed. This means that the vendor must open the preview layout file and manipulate the file data manually by hand. This is problematic, however, because the vendor is changing a file (or data structure) that the customer has already approved. It is possible that alterations will be made, either intentionally or accidentally, that will change the content or appearance of the product when it is finally printed. The result is the print layout file **210**, as so modified.

[0015] The errors that can occur are numerous and varied. Even simple procedures can result in major problems. One simple example is the use of "keyboard shortcuts". Many professionals use a series of keyboard shortcuts (as offered by various programs) instead of a mouse to save time in performing simple tasks. These shortcuts typically require the user to press a modifier key (such as "ALT" or "CTRL") and then press the desired shortcut key. Sometimes, however, the user will mistype and accidentally end up inserting text into a document inadvertently. For example, if the user is trying to cut a graphic or piece of text from a document, the user might use the keyboard shortcut for "cut" (CRTL-X). If the user fails to fully depress the CTRL key, the letter "X" will be inserted into the document. While this a relatively straightforward problem, such mistakes might not be detected until late in the process. This might require the vendor to re-print the product, which is expensive and time-consuming. Hence, any reduction in the overall risk of introducing human intervention into the process would be advantageous.

[0016] As another representative example, the act of opening the file can lead to the common problem of "font substitution." Note that the preview layout file does not (generally) contain the font data necessary to display the text. To save space, the file simply refers to a font file that is stored on the computer used to open the document. If the computer does not have one or more of the fonts referred to by the preview layout file, the closest possible match will generally be substituted from the fonts available. This is known as "font substitution." Publishing programs may not inform the user that font substitution is taking place. If the user does not notice the swap, the substituted fonts will be saved with the new document.

[0017] When the vendor finally exports the data as a PostScript file for printing, the file will refer to the substituted fonts, not the original fonts. Sometimes the substituted fonts are very similar to the correct fonts, so they might look fine. However, in many cases the substituted fonts are significantly different, causing the final printed product to look vastly different from the preview. Typical problems range from low impact results (e.g., the text looking slightly different), to severe differences (e.g., the text wrapping onto multiple lines, the text coming out completely garbled, etc.). Because final proofing will not be done until later in the process, these problems are often very costly to fix when (and if) they are eventually found.

Trapping

[0018] Trapping is a printing process used to adjust areas where two distinct colors meet so that press mis-registration will not cause white specks. Trapping can also be done during the proofing process. It would occur after layout of the product was accomplished, after graphic elements had been identified and placed, and after variable data (name, telephone, address, etc.) had been identified and placed.

[0019] Trapping involves specific manipulation of certain areas in the file. As in composition, if the file is manually manipulated there is the potential for error. The trapping process produces a trapped file **207**.

Imposition

[0020] Step **212** next shows the imposition being performed and is used to create an imposed layout file **214**. Imposition is the process of preparing the print layout for production on a press. The main goal of imposition is to arrange multiple pages and/or images in the proper order for efficient printing. For example, it is far more efficient to impose four or more business cards onto a single plate than to print each business card individually. The imposition process also requires the addition of elements such as crop marks, registration marks, fold marks, color bars, die marks, and the like to the original print layout file. Imposition can be performed manually or via an automated program. Again, manually opening the file to perform imposition can lead to problems.

Color Separation

[0021] Color separation, as shown in step **216**, is the process of separating a color image into a series of single color images that will be used to produce plates. When each single-color plate is printed on top of one another, the result is a composite color image. The color separation step produces a color separated file **218**.

[0022] Color separation is performed previous to raster image processing (RIP). An imposed layout file must be color separated prior to the RIP, which means that the vendor must use another software program. In such cases, errors including font and graphic substitution can occur just as they did in the composition and imposition stages.

Printing

[0023] Once a file is imposed and color separated (plate file) is it is ready for processing by a RIP **224**. There are many techniques used to create PostScript files. Depending on the workflow employed by the print vendor, the PostScript file may include font subsetting as well as OPI comments that are processed by the RIP device. In either of these cases, it is possible to introduce font and graphic substitution errors. The output from the RIP (which is generally a rastered file) is sent to an output device **226**, which might include a recorder or image setter. The output device **226** places the image on a medium to be used by the press device **228**. Alternatively, the binary file **230** could be received directly by a digital press device **232** for printing.

Prior Electronic Solutions

[0024] Based upon the above-described problems with the traditional process, different prior electronic solutions have been proposed. While such solutions have attempted to solve the consistency problem in processing a print job, they have generally proven to be insufficient. Below are detailed certain example solutions, and problems associated with each solution.

[0025] One proposed solution includes attempting to automate the process of preview and print layout generation by writing custom plug-ins to commercially-available publishing programs such as Quark XPress or Adobe PageMaker. One drawback to this solution is that the modified software cannot generally keep track of which elements in a layout are mastered and which are not. This means that at least two PostScript files must be generated, one for the preview layout and one for the print layout. Also, the modified software lacks the ability to store special production information in the PostScript file, such as ink codes, stock information, and other details. The overall solution therefore relies on humans to properly recall this information, or the solution must retrieve such information from yet another document, without any assurance of the accuracy of the production information in the other document. Moreover, these systems do not maintain a reference for standard corporate design or procurement rules for printed matter, and as such are prone to error and not susceptible to automated validation.

[0026] Another solution involves using Open Prepress Interface, or OPI. The OPI Specification 1.3 from Adobe Corporation defines the Open Prepress Interface as a collection of PostScript-language comment conventions that allows a page-layout program to use low- or medium-resolution TIFF images for layout and proofing, and have a prepress system or OPI server automatically substitute a high resolution TIFF or other image when the final film or plates are generated. Both desktop prepress software and high-end prepress systems can use OPI comments to minimize network traffic and image storage requirements.

[0027] Certain functionality is desired, however, which OPI does not inherently provide. Example of such drawbacks include the following. OPI does not generate preview or print layouts. It simply provides a low-resolution file for display on screen and then provides a high-resolution counterpart that is used when it comes time to print. Also, OPI itself cannot determine whether the system is printing the preview layout or the print layout. Moreover, even if OPI could discern which layout it is printing, it lacks the logic to decide which image to use in which situation. Further, OPI only works for graphic images; it cannot be used to control text data.

[0028] Still other processes have tried to solve the consistency problem by using a simple Internet solution. Such solutions involve an on-line web site for product ordering that also generates a low-resolution bitmap of preview images that are displayed to the customer at order time for approval. One drawback of these solutions is that their bitmap file formats are unable to differentiate between mastered and non-mastered elements such as graphics or text, so the system must generate one low-resolution bitmap image for preview and another high- resolution image for the other stages of the production process. Also, the bitmap images used in these solutions cannot store production-specific information such as ink codes, stock information, and other details. Hence, such solutions generally reproduce the problems associated with the traditional process, but in a computer-controlled environment.

[0029] Still another solution might involve an implementation using some form of programming language. PostScript (for instance) is a programming language for imaging devices. Many solutions propose using some form of PostScript programming. However, it should be noted that the PostScript language, by itself, does not constitute a complete solution to the aforementioned problems. For example, the PostScript language does not contain any concept that differentiates between preview and print elements and cannot automatically solve the problems with consistency in the print process.

Prepress Software Applications—PDF to PostScript Conversion

[0030] As mentioned above, when a human operator manually runs a prepress application to process a file there is a great potential for error. For one, because of the subjective nature of the process, the operator may inadvertently make a mistake. Also, similar printed materials may not be consistent because the operator may unknowingly use different settings when a job is processed over and over again. There is no standard format or automated way for the operator to save particular settings for a job to be run under a certain prepress application. In general, there is a need for more certainty, consistency, and standardization in the use of prepress software applications. Customers could also benefit from a system and technique that would provide greater scalability and greater speed in the processing of printing orders.

[0031] In particular, converting a PDF file to a PostScript file is a prepress application that could benefit from the above. Converting PDF to PostScript is a printing process used throughout the prepress industry to normalize PostScript. When a PDF file is converted to PostScript a new output file is created holding the PostScript output. The new file is created according to the user interface options selected in third party applications, or according to the exposed API parameters from the PDF Library. The result PostScript file is normalized DSC Adobe standard PostScript.

[0032] When a PDF file is converted PostScript to there are many decisions to be made for the output of the file. Some of these include font subsetting, font substitution, font

inclusion, PostScript level, allowing RGB images, allowing binary images, page rotation, and allowing halftone images.

[0033] A number of available software tools can be used by a human operator to convert PostScript files to PDF, including the creation, review and editing of the resultant PDF file. Some of these tools have exposed proprietary APIs that can be used to control them. PDF files generated by software tools such as Adobe Photoshop and Freehand each have their own quirks and eccentricities. Settings of parameters (such as font subsetting, font substitution, font inclusion, PostScript level, allowing RGB images, allowing binary images, page rotation, and allowing halftone images) for these applications are all set through proprietary user interfaces in each product. Conversion settings specified by human hands introduces the possibility for errors in the process as each conversion is variable according to the user's choice. Also, conversion can take a variable length of time (possibly hours) depending on which settings are used, any changes needed, any proofing, etc., and human intervention is needed to oversee and drive all steps in the conversion process.

[0034] Therefore, it would be desirable to have a system and technique that would remedy many of the above problems associated with manual conversion of files in the printing process.

SUMMARY OF THE INVENTION

[0035] In response to aforementioned costly, cumbersome and error-prone environment, the present invention utilizes certain technology, along with an interface medium such as the Internet, to offer a fully automated, efficient and cost-effective solution for producing print jobs and the like. The present invention reduces the number of times that human intervention is required in the process and thereby reduces labor intensity, labor cost, time, and high error rates.

[0036] In particular, a PDF to PostScript conversion prepress application is hosted on a server and is automated to provide consistent, error-free and rapid conversion of files used in the printing process. Conversion of a PDF file is accomplished using a PDF to PostScript conversion subsystem. This subsystem includes the master farmer service and a conversion module. A client application such as the product setup module requests that input PDF files be converted. Conversion parameter settings for the client application are pulled from the image logic information database (ILIAD). The client application communicates to the master farmer service the conversion job, which is forwarded to the conversion module.

[0037] Conversion of PDF files is done using the Farm service in a conversion module that automates a third party prepress conversion application. The conversion module uses the PDF Library to actually perform the automated conversion. The conversion module accepts multiple parameters holding conversion specific information, then uses the library to actually perform the conversion. These parameters passed to the conversion module hold the decisions for the conversion of the PDF file to PostScript. The Farm service then outputs the resultant PostScript file. The client application continuously polls the Farm service for status of the individual conversion jobs.

[0038] One advantage of the present invention is that automated conversion is performed. PostScript files are produced automatically by a hosted server application in an automated prepress management system that is highly scalable. Also, standard, consistent, files are produced. Exact settings are stored and retrieved from a database for the conversion process to produce consistent results for similar jobs. Conversion can be completed for large projects in subsecond time frames up to 1 minute (depending on file size). No human intervention is needed to convert files.

[0039] The present invention provides numerous other advantages. For one, by hosting a prepress application on a server, the prepress application can be invoked automatically by any of a variety of client applications (such as the product setup module, proofing module, web server, plater service, etc.) as part of a complete printing system. No human intervention or manipulation of a file is needed which greatly reduces errors. In addition, the turnaround time for a printing job is greatly reduced. Also, the use of washing during customer setup and the product certification process means that errors are further reduced. Secondly, the ability to save and reuse parameter values for particular prepress application means that similar jobs for a client will be output in consistent form. In specific embodiments, default parameter values may be hardcoded into the specific module that runs the prepress application (such as the trapping module, imposition module, etc.) so that the application is run consistently with respect to those parameters. Also, any job parameters determined at run time by either the customer or the entity executing the system are stored in the image logic information database (ILIAD) for future use. For example, a decision made with respect to the look of a business card is stored in the database and reused, thus producing a consistent output for future business card orders. Output is consistent for the same jobs run over and over again. Thirdly, the system is also highly scalable. Hosting a prepress application on a server means that more servers and/or more applications can be added as the need arises. The Farm system as described herein provides an environment where servers and/or modules can be added as required.

[0040] In order to eliminate the numerous opportunities for error that appear in the many stages of the traditional print process, in one particular embodiment the present invention utilizes a single electronic file format, a "Print Ready File" (PRF) format, that can be used at all stages of the process. This format provides the ability to tag certain elements to indicate whether they should be included in the preview layout, the print layout, or both. At each stage, the software programs that read and process the information check these tags to determine the exact content required at that stage.

[0041] The Print Ready File has each element precisely mapped. Because no human is required to alter it, the data for the product and the location of its elements need not change. This eliminates a large source of human error. Additionally, because the present system uses the PostScript language (or its equivalent), the present system does not necessarily need to employ commercial page layout software. The present system allows the font and graphic information to be embedded directly into the file. This eliminates errors, including the font and graphic substitution errors common to the traditional process. Thus, a single file contains all of the data needed for the entire process. The file that the customer previews is the same file that is sent to the vendor (or ultimately the printer). This leads to consistency

throughout the life of a print order, and provides for extremely low error rates overall.

[0042] According to one aspect, an Internet site is used to provide a printing service embodying the present invention. Once a particular customer job is set up, the customer can modify, order, proof, and control its printed and graphic materials. The solution provided by the present invention helps to eliminate the back and forth process between the customer and the printer.

[0043] Resulting features of the overall system include, but are not limited to, the following: (1) The system contains all of the data the customer needs in order to print the customer's materials. (2) Data are completely secure and is the property of the customer. (3) The system incorporates rules to ensure that no matter which party might happen to input data, the resulting printed materials are printed in a manner consistent with the corporate image and design policies that have been approved. (4) The system incorporates a variety of business logic, including procurement, authorization security and billing rules defined by the company. These rules set up an authorization process whereby an employee puts in an order and it is routed to the authorized party. The purchasing administrator then releases the particular order to be sent to the printer.

BRIEF DESCRIPTION OF THE DRAWINGS

[0044] The invention, together with further advantages thereof, may best be understood by reference to the following description taken in conjunction with the accompanying drawings in which:

[0045] **FIG. 1** is a representative prior art block diagram of the overall flow of a traditional print job ordering process.

[0046] **FIG. 2** is a representative prior art block diagram of the modification of files in the traditional print job ordering process.

[0047] **FIG. 3** illustrates an overview of an On-line Automated Printing System.

[0048] **FIG. 4** illustrates a block diagram of the On-line Automated Printing System.

[0049] **FIG. 5** illustrates further details regarding the ILIAD database of **FIG. 4**.

[0050] **FIG. 6** illustrates further details regarding the OPO database incorporated within the ILIAD database of **FIG. 5**.

[0051] **FIG. 7** illustrates further details regarding the asset management file server of **FIG. 4**.

[0052] **FIG. 8** illustrates a Master Farmer service managing any number of Farm service processes.

[0053] **FIG. 9** illustrates the Master Farmer service interacting with a client computer and a server computer running a farm service process.

[0054] **FIG. 10** illustrates load balancing performed by a Farm service for any number of jobs.

[0055] **FIG. 11** shows a representative example of a chart from **FIG. 10** used for load balancing.

[0056] **FIG. 12** illustrates basic data constructs of certain elements of a Print Ready File.

[0057] **FIG. 13** is a representative flowchart of the overall process the printing system.

[0058] **FIG. 14** is a flow diagram of representative steps comprising the "Customer Setup" step of **FIG. 13**.

[0059] **FIG. 15** is a flow diagram of representative steps of the "Create Print Ready File" step of **FIG. 13**.

[0060] **FIG. 16** is a flow diagram of representative steps of the "Generate Preview File" step of **FIG. 13**.

[0061] **FIG. 17** is a block diagram illustrating a PDF to PostScript conversion subsystem according to one embodiment of the invention.

[0062] **FIG. 18** is a flow diagram illustrating execution of an automated, hosted pre-press PDF to PostScript conversion application.

[0063] **FIGS. 19A and 19B** illustrate a computer system suitable for implementing embodiments of the present invention.

DETAILED DESCRIPTION OF THE INVENTION

[0064] For ease of discussion, the following detailed description makes reference to the generation and printing of a business card. It should be kept in mind that the inventive concepts disclosed herein apply equally well to many other types of materials such as film, screens, overlays, cloth, and to other printed matter such as letterhead, envelopes, notepads, posters, newsletters, coffee mugs, pens, hats, shirts, and also to electronic materials such as virtual cards, web pages, e-mail, etc. In accordance with one aspect of the present invention the Adobe PostScript language is used. However, any other functional equivalent might be used for image generation according to a set of programming language instructions. Similarly, where other product examples are referred to, or used to achieve an end result, the same functional equivalent might also be used within the spirit and scope of the present invention.

[0065] In addition, an Internet-based ordering system provides the customer with the ability to interact with the system to preview and approve orders. The figures below will provide an overview of the ordering system in order to demonstrate the context in which customers make use of the system. It should be noted that the present invention would also work with other ordering techniques. The Internet-based ordering system described below is one example of how the invention may be used.

On-Line Automated Printing System Overview

[0066] **FIG. 3** shows a block diagram **300** of a generalized series of steps used in creating a print order. A customer **302** contacts a web site via the computer **304**. The customer inputs data on the web site according to data prompts needed to generate the customer's desired print job. The system creates a Print Ready File (PRF), as shown in element **305**. The PRF **306** is shown to the customer **302** for on-screen proofing **308** of various elements comprising the product. Once the order is approved, step **310** shows the order being sent to the printer. The PRF **306** is thereafter sent to printer as a print order **312**, and the manufacturing (or printing) process begins.

[0067] In the specific embodiment of an Internet-based ordering system, an Internet front-end provides a custom web site for a customer. The customer goes to the web site and selects a particular product to order. The web site loads a pre-configured order form for the selected product, and the customer enters the data they wish to appear on the business card. The web site then transmits the data to the system which generates the Print Ready File (e.g., as a unique PostScript file).

[0068] The web site then takes this Print Ready File and uses it to create the preview layout. It does this by sending the Print Ready File to a viewer program (i.e. the Adobe Acrobat Distiller program), which reads the Print Ready File and creates a Portable Document Format (PDF) file. This file is then sent to the customer via the Internet and is viewed on the computer screen of the customer. In the preferred embodiment, the preview is displayed as a PDF file. While other types of files might be used (GIF, etc.) PDF files are preferred because first, they are extremely high in resolution quality, and second, a PDF file provides a customer with a well-known format to process and view the preview layout.

[0069] The customer then views the file and determines approval (or not) of the item. If the customer desires to change their individual data, the customer then views the order form again, changes their data, and the system generates a new preview file. If the item is approved, the customer clicks a button that tells the system to save the order. The order data for the customer (i.e. quantity, shipping address, etc.) is saved to a back-end database, and the Print Ready File is saved on a server. Once the order is saved, it is tagged as a "pending" order or a "released" order. Some customers wish for all of their orders to be stored in a holding queue so that an administrator may grant them final approval. These are considered "pending" orders. Once the administrator grants final approval, the "pending" order is marked as a "released" order.

[0070] Once an order has been released, it goes through the various stages of the production process (e.g. setup, composition, imposition, etc.) which are described in further detail below. Each stage of the process preferably uses the Print Ready File that was generated when the user created their preview. Once the order is printed, it is shipped to the customer, and the order is complete.

On-Line Automated Printing System

[0071] Referring now to **FIG. 4**, further system-level details of this overall process are shown. A block diagram **400** is shown of the system and the interaction of representative components. In general, this figure describes an overview of an Internet-based ordering system; as stated above, other ordering modes might be used. The customer **402** is shown interacting with a customer computer **404**. A web site residing on the primary web server **408** is contacted via the Internet link **406**. An Image Logic Information Database (ILIAD) **410** is coupled to the server **408**.

[0072] A product setup software module **409** preferably resides on web server **408** and is used to implement the steps of **FIG. 14** (Customer Setup) by which the customer provides product information, provides business rules, a custom web site is created, and any prepress application appropriate for setup (such as color washing) is performed. The OPC module is used by customers to actually order products. The product setup module is used internally by product specialists to enter data for these customer's products into ILIAD. Preferably they are separate tools, one for setup, one for ordering.

[0073] Once product information has been successfully entered, the PRF **412** can be generated, through the OPC client, by the farm processing service **414** (or "the Farm") upon being ordered by the customer. The Farm **414** is generally comprised of at least one, and usually several, high powered computers (e.g., a PC running Windows NT). The Farm is designed to load balance file processing tasks by determining system impact of various jobs and distributing them accordingly. The Farm is also highly scalable, with control being routed through a single point of contact (i.e. a process running on a server, referred to as the "Master Farmer Service"). Each different file processing module runs out of process from a main process. Within the Farm, each file processing module is controlled by an intermediate module which is specific to a number of file processing modules. The intermediate module communicates with the lower level modules and handles all the specific interactions with the modules. Jobs can be re-routed if failures occur within any particular high-level, intermediate or low-level file processing modules. Time estimates can also be provided regarding the processing of jobs. The Farm Processing Service, in general, introduces little overhead in processing of tasks, and each individual service running within can be configured to run any of the file processing tasks. The Farm **414** provides a platform apart from the web server **408** for running processing steps on the Print Ready File. It should be noted that any such processing could also be done on the web server **408**, with load balancing of the job processing managed there.

[0074] The completed PRF **416** is thereafter passed onto the asset management file server (AMFS) **418**. The general data composition of the AMFS is further described in **FIG. 7**. The AMFS **418** is file server (or database) used to store components relating to a client's product which should generally not change. In other words, these are the "assets" of the client, such as company logos and the like. Such components are intended to include encapsulated PostScript (EPS) files containing customer logos and graphics, diagrams, illustrations, static text and the like.

[0075] Referring again to **FIG. 4**, the user can also request a preview of the PRF **420**. The Farm **414** reads back the preview PRF **422** from the AMFS **418** data store. The preview PRF **422** is then sent back to the web server **408** which applies software such as the Adobe Acrobat Distiller program. This (or similar) software reads the PRF and creates a PDF or similar file. The preview PRF file **422** is then sent to the user via the Internet and is viewed on the customer's computer screen.

[0076] If the preview PRF is accepted by the user, the completed PRF **424** is thereafter retrieved from the AMFS **418** and sent for further processing operations. A batcher service **426** and plater service **428** are shown which are each typically a software module running on a high-powered PC or the like. The batcher **426** receives the PRF **424** and performs logical imposition on the data. This would include server based software for automatic imposition. The plater **428** performs further steps including, for instance, imposition and color separation, and the formation of a high

resolution print file. Both the batcher **426** and the plater **428** communicate via link **411** with the ILIAD **410** in order to read and use the rules stored therein in performing their designated tasks. The batcher **426** and plater **428** also communicate via link **427**, which might include a TCP/IP link or the like.

[**0077**] A plate file **430** is thereafter stored in the AMFS **418**. The plate file **430** is also sent to a vendor order system (VOS) **432**. The VOS **432** is typically comprised of a PC or the like. The VOS **432** serves as a transactional machine, or a gate for all other vendors which might exist downstream. The VOS **432** might process tasks or information, including but not limited to, job instructions, purchase orders, invoices, payments, and shipping status of orders. The VOS **432** includes a link **434** to the ILIAD **410** in order to retrieve various business information pertaining to particular customers. The VOS **432** receives a plate file **430** from the plater **428**. In this example, the plate file **430** is yet another type of PostScript file.

[**0078**] The VOS **432** may be used to send the plate file **430** to any other system or to any request source via any reasonable medium. Such information could be traded, auctioned off, or distributed across many different markets, in many different ways, and across many different mediums. Such information could also be supplied by various customers and aggregated for processing by VOS **432** and ILIAD **410**. In this example, an Internet connection **436** is shown wherein a vendor computer **438** interacts with the VOS **432**. The vendor computer **438** negotiates an order with the VOS **432** and receives the plate file **430**. Many other such vendor computers might exist and contact the VOS **432**.

[**0079**] Vendor computer **438** thereafter sends the plate file **430** to a raster image processor (RIP) **442**. Note that the plate file might alternatively be sent directly to the RIP via link **440** if the VOS **432** is not a desired element in the process. The RIP **442** is typically a PC or the like running RIP software. The output to the RIP should preferably be in Level 1 PostScript, to support all possible RIPs. To accommodate these features, the preferred embodiment implements the Print Ready File in the Adobe PostScript language. It should be noted that other languages aside from PostScript can also be used that support the above conditions. For example, other page composition languages/formats can be used. Also, other RIPs or specialized equipment can be supported for custom print orders, and the like.

[**0080**] The RIP produces a bitmap file **443** which is sent to a recorder **444**. The recorder **444** is an image setting device which takes the raw bits from the RIP and translates them into a press input medium **446**. Such media **446** might include film, RC paper, or whatever input source the press **448** is looking for. The press **448** takes the input medium source and produces the end result, in this case a business card **450**. The business card **450** is shipped or routed **452** back to the customer **402** to complete the overall process.

[**0081**] The general data composition of ILIAD **410** is further described in **FIG. 5**. The elements shown are meant to be illustrative, and are not meant to limit the data structure of ILIAD to such elements. Product and design information are shown generally as element **460**, and is shown to further include asset information **462**. Asset information is intended to include various customer logos, text, or fonts (i.e. "assets" of the customer) to be used on the printed products. Such information might be provided as data files, or via menu prompts and the like, from the customer. Specifications and costs **464** would include information pertaining to individualized costs for implementation of certain designs, and the like. Layout rules **466** would include the various rules to be used in arranging figures or text on the printed product, so that conflicts and inappropriate layout schemes do not occur. Customization rules and options **468** might provide for further custom design capabilities in arranging unique layouts.

[**0082**] ILIAD **410** is also shown to include manufacturing information **470**. Such manufacturing information might include (but is not limited to) imposition rules **472**, separation rules **474**, vendor information **476**, and trapping rules **478**. These various rules are used in the system for arranging and preparing the images and/or elements in the Print Ready File (PRF). Order processing and work-in-progress (WIP) information **480** is also shown. Such information might include (but is not limited to) customer information **482**, work orders **484**, shipping information **486**, and pricing information **488**. An on-line printing center (OPC) database **490** is shown incorporated within ILIAD, with further details regarding its data contents described in **FIG. 6**. The OPC database might also exist separately from the ILIAD, but is shown incorporated here as one embodiment.

[**0083**] Referring now to **FIG. 6**, the OPC **490** is shown to include (but is not limited to) corporate procurement rules **491**. Such rules might further include users/roles **492**, privileges **493**, purchasing rules **494**, and billing/shipping rules **495**. Customer Products/Assets **496** includes design/brand information **461**, asset information **463**, catalogs-products-kits **465**, and customization rules/forms **467**. The OPC **490** is shown to further include a variable information database **497**. This data store contains information that regularly changes, such as locations, departments, titles, etc. **469**. Employees **471** are also included in this data grouping **497**.

[**0084**] Referring now to **FIG. 7**, the AMFS **418** is shown to contain representative data, including for example low resolution EPS files **419**, high resolution EPS files **421**, Preview PDF files **423**, and PostScript fonts **425**.

Master Farmer Service, Farm Services, and Load Balancing

[**0085**] FIGS. **8-11** illustrate a preferred embodiment for the farm service processing unit **414** of **FIG. 4**. Referring now to **FIG. 8, a** Master Farmer service **550** is shown interacting with a plurality of Farm services **552**, **554**, **556**, and **558**. Still other Farm services might also be connected to the Master Farmer. The collective interaction of the Master Farmer and the Farm services is referred to as the Farm system.

[**0086**] **FIG. 9** shows the interaction between the Master Farmer and Farm services in more detail. A first machine N (**600**) is shown hosting (or running) the Master Farmer **602**. A second machine N+1 (**604**) is shown hosting (or running) Farm service **606**. The Master Farmer **602** interacts with the Farm **606** via link **603**. This link might be over any of a variety of transmission mediums, including the Internet. Still other machines, i.e. machine N+M (**640**), can be included to host other Farm services, and interact with the Master Farmer via link **642**.

[0087] According to the present terminology, the basic structure underneath a Farm service **606** includes Field modules, e.g. **608** and **610**. The purpose of a Field module is to communicate with a specific Plot module (e.g. **612**, **614**, **616**, and **618**). A Plot is an application (or the like) that can be made to run out-of-process from the Farm service. A Plot module runs a secondary application with job data, in order to generate an output. Each Plot is responsible for making sure the task (or job) gets completed. The Plot is used to turn the job packet into a format that a particular application can understand. It is generally the function of the Plot to monitor the job and encapsulate the time estimation for completing the job.

[0088] This out-of-process structure of Plots is maintained so that if something were to go wrong with the Plot, it does not necessarily affect (in an adverse way) the running of the Farm service. Each Plot processes a file or task, and each Plot is tied to one application. The Field serves as a place for the Farm service to find out the status of the Plots. The Field is generally configured to run as part of the Farm service process. If the Field goes down, then the associated Farm service may also go down. Plots, however, generally run out-of-process since the system will have little control over third party applications. If a third party application ceases to work, then it will not take down the whole associated system.

[0089] A client **620** (as typically shown using a CPU) interacts with the Master Farmer **602** via link **605**. The client provides tasks or jobs, such as files or the like, to be processed by the system. These tasks or jobs are represented as job A (**622**), job B (**624**), and so forth through job E (**626**). As each file or task request comes into the Master Farmer, it is thereafter distributed to a Farm service, and then to a Field module, and then to a Plot module for handling that task. Typically a Plot is configured (or chosen) to handle one particular type of incoming task. The Plot processes the task, and sends back a message regarding the success or failure in performing the task.

[0090] An example Plot module might include Adobe Acrobat Distiller, which converts a PostScript file into a PDF file. PDF (Portable Document Format) is a file format that has captured all the elements of a printed document as an electronic image that can be viewed, navigated, printed, or forwarded. PDF files are created using Adobe Acrobat, Acrobat Capture, or other comparable products. To view and use the files, the Acrobat Reader is typically used. PDF files are particularly useful for documents such as magazine articles, product brochures, or flyers, when it is desired to preserve the original graphical appearance of the pages. Still another example of a Plot application includes Vipre (Versatile Product Rendering Engine), which is the rendering engine used to generate Print Ready Files. The overall system structure might include many such Plot modules, each of which are capable of running the same application such as Distiller, Viper (or others). Such redundancy allows for simultaneous processing of similar tasks or jobs.

[0091] Each separate Plot is configured to communicate with its associated Field, and the Farm will "oversee" (manage, monitor, etc.) the Fields underneath it. The system is designed to let any number of Fields run on a particular Farm. If it is determined that any particular Plot is too processor intensive, that particular Plot can be run on a single Farm service, and/or on a single Farm machine. This can be used to speed up the processing of Plot applications on other Farm machines. Moreover, the different elements of this system can be segregated and moved very readily from one machine to another. For instance, a Field (with all of its Plots) running on a particular machine can be moved onto a different machine. This can provide extra processing speed for Fields remaining on the original machine.

[0092] As a result, the overall Farm system is generally scalable, since the system is controlled by a single point of contact, namely the Master Farmer service. The Master Farmer distributes work among the Farm services. Each machine in the Farm system has an instance of the Farm service running on it. Each Farm service communicates with the Master Farmer, thereby making itself available for jobs. Each Farm can have one or all of the file processing tasks running on it. As many new machines as are needed can be added to run the Farm service, and thereby accommodate varying loads. Each Farm service can include configurable parameters to control its system usage (e.g. Windows NT threads, or the like). The service can also be tuned to particular tasks that the service performs, and to the machine that the service is running on. The Farm system can take advantage of multiple processors, and be made to scale upwards (or downwards) according to the system on which it is running.

[0093] As for errors, there are generally two types: job or task errors, and system failures. System failures are when a particular Farm service, Field, or Plot fails unexpectedly when trying to process a task. This failure would generally be in an area that should not be a failure. In such a case, the Farm service will alert the Master Farmer that it will no longer accept tasks, and shut itself down. When a particular Farm has shut itself down, or stopped communicating, the Master Farmer will route all tasks running on that Farm to other Farm machines running that specific file processing task.

[0094] The Master Farmer therefore serves as a central load balancing area. The overall Farm (i.e., the combination of the Master Farmer and Farm services) is designed to load balance file processing tasks. To perform such balancing, the overall Farm system determines how processor intensive each particular application is, and processes the file either locally or remotely. The Farm system is configured to determine the system impact by the size of the job rather than the actual task being performed. Each different type of file processing task judges the relative size of each task and the Farm uses this size, and the current processor load, to determine how to distribute (or load balance) the various tasks.

[0095] If a client machine needs to process a job, then the client machine will interact directly with the Master Farmer. Example jobs might include: creating a consistent PostScript file, converting a PostScript file into a PDF file, or converting a PostScript file into a bitmap file. The Master Farmer has one or more Farm machines connected to it. The Master Farmer machine might also be configured to have a Farm process running on that same machine. The Master Farmer is constantly receiving updates from each Farm machine (or server), wherein the Farm machine provides feedback on the burden level of the Master Farmer. The burden level relates to how long a particular job will take on that Farm Service.

[0096] Referring now to **FIG. 10**, yet another level of detail is shown regarding the relationship between the Farm services, Field, and Plot modules in terms of load balancing. Each Farm service **702** receives jobs A, B, . . . E from the Master Farmer. The Farm sends the respective jobs to a Field, which has associated Plots **706**, **708**, and **710**. The jobs are sent to the respective Plots according to the job type. For instance, if a client wants to convert a PostScript file into a PDF file, the client sends that particular request to the Master Farmer. The Master Farmer then determines which particular Field has the necessary application (or Plot) associated with it to accomplish this task. The Master Farmer maintains an evolving list of the Farm services and associated Fields and Plots. The Master Farmer walks through each Farm service, and determines which potential Plots might be able to process the task.

[0097] The Master Farmer also determines the level of burden for each Farm service. The level of burden is a function of the CPU usage for the machine associated with the Farm service, and the size of the jobs being processed by each set of Plots associated with a Field. Each task being sent to the Master Farmer has a size associated with it. This is a relative number that is used to estimate and load balance the task.

[0098] Each Field maintains its own chart **712** of CPU usage versus job size, in order to provide an estimate of how long the particular job will take. **FIG. 11** shows a representative example of such a chart **712** in more detail. The charts are compiled into an overall level of burden on the Farm service, and the Master Farmer decides which Farm service will receive any particular incoming task based upon the relative burden level for such Farm services. An estimate of how long it will take to process the job is sent back to the client. The job is sent to a particular Farm service, and the Farm service provides an update of the time estimate to complete the job, which in turn is again sent back to the client. The Master Farmer might detect that a job is going to take longer than it should, and thereafter re-estimate how long the job will take, in light of all the other traffic on the system. Clients can also request new estimates.

[0099] The chart therefore serves as an indication of how busy the Farm service is over a given period of time, and/or provides a historical curve of performance for particular applications. Over certain time periods, each Field is updating this chart, and the Farm service packages up all this information and updates the Master Farmer with such information. Hence, if a client wants to run Distiller on a file, then an X-Y performance curve for Distiller over a time period, for instance the last few hours, will exist for estimation purposes. If an incoming file is 2 MB, then an estimate can be made regarding processing a file of this size. An important feature of the present system is that it looks at pending files. If for instance a 600 MB file were pending, then estimates would be adjusted accordingly. The chart is analyzed for each Farm service in light of the size of the incoming jobs for that Farm service. As a result, a job might be shifted and queued up to be fifth in line on a first Farm service, as opposed to first in line on second Farm service, because it has been estimated that the job will run faster despite being fifth in line on the first Farm Service. Hence, regardless of queue position, the time estimate for completion will control the ultimate placement of the job on a Farm service. Both queuing and historical performance estimates are thereby used in deciding which Farm service will handle the job.

[0100] It should be noted that prepress applications are generally very file intensive. As a result, the system is constantly reading and writing to such files during the course of processing them. This allows estimates on system usage to be based upon system impact assumptions (and predictions) relating to such file usage. For instance, prepress applications generally have a large impact on the system; and/or a large impact on the network card if the application is reading and writing to the network; and/or a large impact on the drive if the application is reading and writing to the local disk; and so forth along similar relations. Hence, a chart can be constructed regarding system impact. By way of example, if the processor is running at 75% utilization, and job comes in of size "X", then predictions (and/or extrapolations) can be made as to how long it will take to process that particular job. Each Field maintains its own chart of CPU usage versus job size in order to predict how long a job will take. As network (or other such) conditions change, then the chart will be revised. If, for instance, a size "5" job at 75% CPU utilization will take 3 seconds to process, then it might be extrapolated that the same sized job at 50% CPU utilization will only take 2 seconds.

[0101] For prepress applications, the size of the job is generally easy to determine. For instance, if a PostScript file comes into the system having a certain file size, then it is relatively straightforward to estimate how large the resulting PDF file will be. For most prepress applications, there are generally input files and output files, which follow similar predictive patterns. In other systems—which might host business logic or the like—it is generally difficult to predict the impact that different jobs might have on the general applications server. File (or job) sizes, however, provide for more regular estimation.

[0102] The present invention is also configured to introduce little to no overhead in the processing of tasks. Certain speed advantages might be realized by running an application locally on a client machine. However, the present Farm system passes the job request from the Master Farmer to a Farm service, and to the Field, and to the Plot, with no significant tradeoffs in speed. Moreover, a very large file might be processed more quickly on a larger machine (or machines) of the Farm system, as compared a smaller (less powerful) local machine.

[0103] The present Farm system is also easily expandable, wherein each of the Farm services can be configured to run any of the file processing tasks. If a particular task is very resource intensive, it can be run alone on the system. When each Farm service tells the Master Farmer that it is running and ready for tasks, it also identifies the tasks that it is servicing. Adding new file processing tasks is as simple as placing the new Field and Plot on a machine in a particular directory.

Print Ready File

[0104] In order to accommodate the "state" of the file (e.g., Print or Preview), a global numeric variable, or "flag", is used to indicate which elements will image when this file is processed. In this example, this flag is a PostScript integer and will be used for applying a bit mask to each of the state

flags of the individual elements. Each element has four possible states: Print, Preview, Both, and none. This global flag is written into the PostScript stream such that an application can find the position of the flag within the file, and alter the value as needed. The default or original value of the flag will be set to include elements that are in a Preview or Both state. It is a unique and efficient aspect of this invention that a single flag may be used. However, alternative embodiments might use multiple flags, comparative elements, or run-time logic to evaluate the appropriate state and direct processing, all within the spirit of the invention.

[0105] The Line and Text elements will each check their respective state flag against the global flag to see if their bit values are contained within the global flag, using a standard bitmasking technique of a logical AND operator. If the elemental state flag bits are not within the global flag (a zero result from the logical AND), a function is utilized to move the PostScript interpreter's file pointer past the end of that particular element. The element is thereby skipped, and the element does not image.

[0106] Embedded graphics will use a different method than Line and Text elements for selecting Print, Preview, and Both states. When writing a graphic with a state of Preview, the graphic is embedded in the file, but OPI comments are used to link to a blank PostScript file. When using this file with a global flag set in a Print state, the blank PostScript file is used instead of the Preview one that is embedded within the file. When writing a Print graphic, a blank PostScript file is embedded and OPI comments are used to link to the graphic. When writing a graphic that is in the Both state, the graphic is embedded with no OPI. There is a caveat to graphics in a Both state, and that is when the image is high resolution. High resolution raster graphics are usually very large. One purpose of the present system is to create a file that is relatively small, thereby enhancing speed in working with the file. Here, the OPI comments are used to facilitate a solution. The low-resolution version of the graphic is embedded in the file, and the OPI comments are used to link to the high-resolution version. In this state, when using the file for Preview, the low-resolution graphic is seen. When using the file for Print, the high-resolution file is used. Because of the OPI implementation, the programs used for creating Previews of the PostScript file are preferably configured to remove the OPI comments. The programs that utilize the PostScript file in a Print state should preferably be configured to process the OPI comments.

[0107] One feature of the present system are the OPI links to external documents. Along with the Print Ready File, each of the externally referenced files need not change. This is implemented, in part, by securing the directory where the graphics reside, and using operating system security. Only applications controlled by the present system might be used to add files to this directory. These applications might not allow the modification or deletion of any of these files, but only the adding of new files. In this manner the externally referenced files are secured such that they cannot be altered by accident, or on purpose. They can also be secured by access codes or authorization, as between print and preview modes.

[0108] Referring now to **FIG. 12, a** representative construct of the Print Ready File **500** is shown. A global flag **502** is used to indicate which elements can print. This flag is numeric and is used to apply a bit mask to the elements. For example the value "0 1" indicates that the elements only in the "Preview" state will not print, while those in "Print" state should be printed. In this example, it is shown as a 32-bit PostScript integer. Additionally, shown is a text element **504**, a line element **506**, and a graphical element **508**. Each text and line element has associated with it four "states": Print, Preview, Both, and none. However, the graphical element does not use the "none" state. Preferably, these states of an element are represented in a 32-bit integer, similar to the global flag, termed a "state" flag.

[0109] The text and line elements **504** and **506** will each check their respective state flags against the global flag to see if they should be imaged. If the text or line element state flag does not match with the global flag, then the present invention will apply a routine of PostScript operators to move the interpreter's file pointer past the end of the element in question, thereby skipping that element such that it does not image. For example, if text element has its "Preview" bit set, it would still not be imaged during a preview unless the "Preview" bit of the global flag was also set. This routine, hereafter referred to as "global flag comparison logic" is shown encompassing the text element **504** with a start function **510** and an end function **512**. The same logic is also shown encompassing the line element **506** with a start function **514** and an end function **516**. Each element in the file preferably has this logic wrapped around it.

[0110] The global flag comparison logic operates as follows. For each text and line element, the state flags of the element are compared to the global flag. If the global flag matches the state flags, then the element is processed. If the global flag does not match the state flags, then the element is not processed. The preferred embodiment skips the element by moving the pointer past the element via a PostScript routine. The global flag comparison logic then loops back until each element is completed.

[0111] Embedded graphic elements will use a different method depending upon the setting of the Print, Preview, and the Both state flags. The Print Ready File is being passed from point to point. In general, it is desired to keep the size of the Print Ready File down to a minimum for certain operations, thereby increasing the efficiency of the overall system. This is done by directly embedding a low resolution graphical object into the file for preview operations. For print operations, the preview graphic is removed and a link to a high resolution graphic is supplied instead. When the flag is set for "both," then a low resolution graphic is embedded in the file, and a link is provided to a high resolution graphic. Further details of operation of the Print

[0112] Ready File are found in U.S. patent application Ser. No. 09/460,307 filed on Dec. 13, 1999.

Print Production Process Flow

[0113] Different applications are used at different stages of the print production process to produce a final printed product. Below, an overall flow of the process steps are first described. Thereafter, certain stages of the print production process are described in further detail. Use of a Print Ready File is disclosed as the preferred embodiment, but is not required. While described as flowchart steps, it is generally

recognized that persons of ordinary skill in the art will recognize how to implement such applications from the flowchart descriptions.

[0114] **FIG. 13** shows an overall flowchart **900** of the print production process. In step **902**, the user first provides business information to a person responsible for setting up the user account. This first step involves considerable human interaction, but the step generally needs to be done only once in order to properly set up the account. Such information might include: purchase orders, authorizations, employee information, employee lists, product styles, style guides, samples, graphical information and fonts. Products would include items such as business cards, envelopes, stationery and the like. Step **904** involves a customer setup process, wherein the elements within a business card or product are defined and stored. Customer setup **904** is described in further detail in **FIG. 14** and is preferably implemented using product setup module **409** hosted on web server **408**. Step **906** involves the customer providing information regarding the product by using the customer web site referred to in **FIG. 14**. Once such information has been entered, the system can perform the composition step in **908**. Composition creates the Print Ready File according to steps further detailed in **FIG. 15**. Generally, the user will request a preview file in step **910** in order to view the results on-screen before printing. The steps involved in the generation of the preview file are further described in **FIG. 16**. The decision block **911** sends the user back to step **906** if further changes are desired. If the preview file is acceptable, then the order is placed in step **912**. In step **913** trapping is performed, preferably as described in the above-referenced U.S. patent application Ser. No. 09/480,821, filed on the same date herewith.

[0115] Thereafter, the process of imposition (including batching and plating) of the PRF is performed in step **914**, preferably as described in the above-referenced U.S. patent application Ser. No. 09/481,550, filed on the same date herewith. Color separation **916** is next performed, preferably as described in the above-referenced U.S. patent application Ser. No. 09/480,332, filed on the same date herewith. Color separation produces color separated plate files which are transported to the print vendor in step **918**. In a preferred embodiment, both imposition and color separation are performed in the same pass by a third party software tool. Step **920** shows the processing of the color separated plate file by submitting the file to a raster image processor (RIP). The RIP generally produces a bitmap file which is converted into the printed product **922**. The product is thereafter shipped to the customer in step **924**.

[0116] **FIG. 14** shows certain more detailed steps associated with the customer setup application **904** from **FIG. 13**. In the setup process, product setup software is used to create each of the basic elements, and associate a state flag with each one. This software therefore identifies the position, size, contents, etc. of each element type. Step **1002** is the process of determining the printing requirements of a product. This is generally done via a human specialist interacting with the customer to gather and generate graphic and textual materials pertaining to that customer. In other systems, tabular layout or other document definitions are used to gather and create the derived graphic and textual material (as in XML-based processing of data and Document Type Definitions). Other steps might include die creation, and other related procedures. Step **1004** next is the performance of the prepress process. This typically consists of generating and verifying the customer assets (e.g., EPS files and fonts). These assets are then added to the asset management file server (AMFS) **418**, or other such database.

[0117] An EPS is a file format used in prepress operations, and generally contains information required to create a printed document containing graphics images. Along with the imaging bits, EPS files contain other data respecting reproduction of the image for digital display, or for print, such as color selections, color settings, scaling of graphics, embedded fonts and so forth. Such files often need to be "Washed" or converted into a consistent format for automated processing. Washing is one of several prepress operations that can be automated by hosting the application on a server, or other networked computer, and maintaining control of certain operations as part of a distributed prepress software operation.

[0118] In step **1006**, the user is further prompted for information regarding the product, as might be needed for a particular print job. Step **1008** shows the process of defining the composition rules for each of the particular elements. Step **1010** further shows that for each element, the x, y, and z position of the element in the product is defined. In step **1012**, a type and state is assigned to each element. The "type" includes line, text, and graphical, whereas the "state" includes Preview, Print, Both, or none. Step **1014** next shows the assignment of various other properties (as needed) to each of these elements. Once finalized, this information is stored via step **1016** in a rules database such as ILIAD **410**.

[0119] A customer web site is created in step **1018**. The customer accesses the web site to provide various customer information. The user is prompted for information in step **906**. Text elements might require a prompt, in that the user is providing textual information in response to a question. Line and graphical elements, however, might be retrieved directly from the appropriate database via a locator, index, or the like. Once the user enters the requirement information, it is stored in ILIAD **410** as per step **1020**.

[0120] The next stage of the process involves composition of the Print Ready File. When created, the Print Ready File in the preferred embodiment follows PostScript conventions including, for instance, DCS standards, platform independent operators, and color separation functions. The file might also include a bounding box, which is not required for a multi-page PostScript file, but might be used by other applications in the process to identify the size of the image to be rendered.

[0121] Referring now to **FIG. 15, a** more detailed flowchart is shown of the composition process **908** from **FIG. 13**. In step **1102**, the web server **408** requests the PRF from the Farm **414**, along with related user information. In step **1104**, the rules regarding the product setup are read from the ILIAD **410** database. The global flag is next written into the PRF with a default setting of "Preview" as shown in step **1106**. A loop is then performed for each element of the product **1108**. The element information is retrieved, e.g. data source, component data, and state. Based upon this information, and the logic described above, the element is written into the PRF in step **1112**. The loop continues via link **1114** until each element of the product is completed and written into the PRF. When finished, the PRF is stored in the Asset

Management File Server (**418**). An alternative embodiment could substitute receipt of one or more data streams in response to the web server request in step **102**, as with XML output from one or multiple machines performing the required pre-press operations. The rest of the operations described proceed as depicted.

[**0122**] Once the PRF is created, a preview file is generated as will now be explained. Referring now to **FIG. 16, a** flowchart is shown of representative steps associated with the element "Generate Preview File"**910** from **FIG. 13**. If the user desires to preview the file, the web server **408** requests a preview file from the Farm **414** as shown in step **1202**. The Farm then retrieves the PRF from the asset management file server **418** in step **1204**. The Farm sets the global flag in the PRF to preview mode in step **1206**. In step **1208**, the Farm converts the PRF to a preview file. This is done via a PostScript interpreter which results in common image formats using the global flag comparison logic (and the OPI comments). Common image formats include, for instance, bit map and PDF. In step **1210**, the preview file is thereafter sent to the web server **408**. In step **1212**, the user then accesses and views the preview file via a web browser or the like. Further details on creating a preview may be found in U.S. patent application Ser. No. 09/460,307 filed on Dec. 13, 1999.

PDF To Postscript Conversion Subsystem

[**0123**] **FIG. 17** is a block diagram illustrating a PDF to PostScript conversion subsystem **1800** according to one embodiment of the invention. Conversion subsystem **1800** provides an automated hosted environment to perform the pre-press application of converting a suitable PDF file to a resultant PostScript file **1822**. Subsystem **1800** includes ILIAD **410** which includes conversion parameters for the job and a client application such as plater service **428** or product setup module **409** that wishes to perform automated conversion.

[**0124**] Any client application such as plater service **428** or product setup module **409** may make a conversion request of master farmer service **550**, which is preferably implemented as described in FIGS. **8-11**. Conversion parameters along with an input file and an output destination (conversion information) are relayed from the client application to master farmer service **550**. Master farmer service **550** interacts with farm service **552** in order to request that conversion module **1820** perform a conversion of a particular job in order to produce PostScript file **1822** which is stored on AMFS **418**.

[**0125**] **FIG. 18** is a flow diagram describing a process for initially setting up automated conversion and for executing a conversion. The following steps may occur at any time and in any order before conversion is actually executed. In a performed embodiment, they are implemented as follows. In step **1850** various default parameters that are desired to be the same for all conversion jobs are set and hardcoded into conversion module **1820**. Preferably, these default parameters are compiled into the module during development. Examples of these hardcoded default parameters include emitHalftones, centerCropBox, emitPageRotation, emitTTFontsFirst, and emitDSC.

[**0126**] In step **1851** default parameters that depend upon the particular client are set. These are parameters that would have different values depending upon the client that is requesting the conversion. For example, the Plater could output Level 1 or Level 2 postscript (depending upon whether the target manufacturing partner supports Level 2 or not). By default, Level 1 would be chosen (as it is the lowest common denominator), however Level 2 could be output by modifying the psLevel and binaryOK parameters. In the case of washing, Level 1 PostScript would always be produced as washing seeks to convert an input PostScript file to the lowest common denominator.

[**0127**] Once the above steps have finished, setup for conversion has been completed, and the system is ready to receive job-specific information from a customer in order to perform a conversion. In step **1852** a customer submits job specific information regarding a product to be printed. For example, a customer may be submitting information for business cards to be printed. Preferably, this step is implemented as described in step **904** of **FIG. 13** and is performed using product setup module **409**.

[**0128**] In step **1854** various of the conversion parameters for a specific job or for a particular line of products may be determined manually. Of course, the previously set default parameters may be relied upon and no additional parameters need be set in this step. If desired, though, either a representative from the customer or a representative from the entity implementing the on-line automated printing system may specify additional conversion parameters or may override various of the default parameters. These parameters may be entered using product setup module **409** or in another fashion. Examples of conversion parameters that may be set in this step include changing font handling information for embedding fonts once per output PostScript file or once per PostScript page in the file. Examples of parameters used by the PDF library (either set manually or by default) are found below in Table 1.

TABLE 1

Parameters and Sample Values Used

Parameters:	Sample Values used:
PsLevel	1
OutputType	PDOutput_EPSNoPrev (Adobe PDF library constant)
IncBaseFonts	KIncludeNever (Adobe PDF library constant)
IncEmbeddedFonts	KIncludeOncePerDoc (Adobe PDF library constant)
incType1Fonts	KIncludeOncePerDoc (Adobe PDF library constant)
IncTrueTypeFonts	KIncludeOncePerDoc (Adobe PDF library constant)
IncCIDFonts	KIncludeOncePerDoc (Adobe PDF library constant)
incType3Fonts	KIncludeOnEveryPage (Adobe PDF library constant)
IncProcsets	KIncludeOncePerDoc (Adobe PDF library constant)
IncOtherResources	KIncludeOncePerDoc (Adobe PDF library constant)
emitTTFontsFirst.	false
EmitShowpage	false
EmitDSC	true
SetupProcsets	true
EmitColorSeps	true
EmitRawData	false
BinaryOK	false
TTasT42	true

TABLE 1-continued

Parameters and Sample Values Used

Parameters:	Sample Values used:
Scale	100.0
EmitHalftones	true
CenterCropBox	true
EmitPageRotation	false
EmitSeparableImagesonly (RGB color conversion)	true
EmitExtGState	true

[0129] In step **1856** these additional conversion parameters are then saved into ILIAD **410**.

[0130] The following steps illustrate execution of an automated, hosted pre-press conversion application. It should be appreciated that any of a variety of client applications may request that automated conversion occur. A color washing application may request conversion of PDF to PostScript. The plater service **428** may also request conversion of PDF to PostScript for creating level 2 or level 3 PostScript. Other client applications that may request conversion include the plater service which would use it to output different levels of PostScript.

[0131] The below example illustrates a scenario in which the client application product setup module **409** is requesting automated conversion as part of color washing. Firstly, a customer interacts with web server **408** and orders a particular product. Preferably, this step is implemented as previously described in step **906** of **FIG. 13**. For example, a customer may access their custom web site to provide a particular name and title for a new business card to be printed for a new employee. The style for the business card, standard information and a company logo will have already been supplied during customer set up which is step **904** of **FIG. 13**. At this point in time, product setup module either automatically or at the direction of an internal employee requests color washing of the product to be ordered—which will generate a request for conversion from PDF to PostScript.

[0132] In step **1878** the product setup module **409** requests conversion of a particular job by making a request of Master Farmer service **550**. Concurrently, product setup module **409** transfers any manually set parameters, any parameters saved into ILIAD, and source and destination file names to Master Farmer service **550**. Together this information is collectively referred to as conversion information.

[0133] In step **1880** the Master Farmer service selects a particular Farm service **552** to perform the conversion and transfers the conversion information. Master Farmer service **550** preferably makes this selection as previously described in FIGS. **8-11** and takes into account load balancing, the optimal module to perform the conversion, etc. In this step Farm service **552** also selects a particular conversion module **1820** to perform the conversion.

[0134] In step **1882** the conversion module loads the PDF library. In step **1883** the module sets parameters in RAM for the PDF library to use. An example of C code that may be used to store parameters in RAM is found in the Appendix. In step **1884** the conversion module uses the PDF library to convert PDF to PostScript using the stored parameters. In step **1885** the conversion module receives status from the PDF library indicating that the conversion is complete. Status of jobs in process is done through use of the Windows API. First, the target PostScript file's output size is estimated. Second, a separate thread of execution is created for creating the target PostScript file. While the file is being written by the separate thread, the main thread polls the target PostScript file at short intervals, watching it being written. The main thread has an estimate of the size of the output file and updates status accordingly.

[0135] In step **1886** the conversion module outputs the resultant PostScript file to a local drive. In step **1888** the conversion module copies the PostScript file **1822** to asset management file server **418**. In step **1890** the conversion module relays completion status back through the requesting processes to the client application which in this case is product setup module **409**. In other words, notice of completion is relayed to Farm service **552**, to Master Farmer service **550**, and eventually back to the requesting client application. During execution of the conversion, the conversion module polls the output file to determine status.

[0136] It should be noted that the requesting client application and each service involved in the chain is continuously polling a service farther down the chain for any status information throughout the conversion process. For example, once product setup module **409** requests a conversion of Master Farmer service **550** it continually polls the service for status. In turn, the Master Farmer is continually polling Farm service **552** for information regarding the status of the conversion being performed by conversion module **1820**. Finally, conversion module **1820** is continually sending back status information to Farm service **552** including the length of time estimated to be remaining for trapping, whether the trapping job has been placed in a Farm queue for processing, whether the job is running, whether the job is done, and whether the job has an error.

[0137] Once PostScript file **1822** has been stored in asset management file server **418** the system has successfully performed automated, hosted conversion of a file and the PostScript file may now be used by another pre-press application for further processing.

Alternative Embodiments

[0138] In the preferred implementation, a PostScript file format is altered and used to store additional information about a product which allows the system to use that file in all stages of the production process. Alternate implementations may use a different file format to achieve this goal. For example, the system might use the Portable Document Format (PDF) to store this information. PDF is similar to PostScript in many respects, and could easily be modified to fulfill the objectives of the present invention. Other file formats that may be used are Windows Metafile, or PDF/X. Also, while use of level 1 PostScript has been described above, level 2 and/or level 3 (and/or subsequent versions) of PostScript might similarly be used. Moreover, a Print Ready File described herein may be implemented in other similar language such as PDF.

Computer System Embodiment

[0139] **FIGS. 19A and 19B** illustrate a computer system **900** suitable for implementing embodiments of the present

invention. **FIG. 19A** shows one possible physical form of the computer system. Of course, the computer system may have many physical forms ranging from an integrated circuit, a printed circuit board and a small handheld device up to a huge super computer. Computer system **900** includes a monitor **902**, a display **904**, a housing **906**, a disk drive **908**, a keyboard **910** and a mouse **912**. Disk **914** is a computer-readable medium used to transfer data to and from computer system **900**.

[**0140**] **FIG. 19B** is an example of a block diagram for computer system **900**. Attached to system bus **920** are a wide variety of subsystems. Processor(s) **922** (also referred to as central processing units, or CPUs) are coupled to storage devices including memory **924**. Memory **924** includes random access memory (RAM) and read-only memory (ROM). As is well known in the art, ROM acts to transfer data and instructions uni-directionally to the CPU and RAM is used typically to transfer data and instructions in a bi-directional manner. Both of these types of memories may include any suitable of the computer-readable media described below. A fixed disk **926** is also coupled bi-directionally to CPU **922**; it provides additional data storage capacity and may also include any of the computer-readable media described below. Fixed disk **926** may be used to store programs, data and the like and is typically a secondary storage medium (such as a hard disk) that is slower than primary storage. It will be appreciated that the information retained within fixed disk **926**, may, in appropriate cases, be incorporated in standard fashion as virtual memory in memory **924**. Removable disk **914** may take the form of any of the computer-readable media described below.

[**0141**] CPU **922** is also coupled to a variety of input/output devices such as display **904**, keyboard **910**, mouse **912** and speakers **930**. In general, an input/output device may be any of: video displays, track balls, mice, keyboards, microphones, touch-sensitive displays, transducer card readers, magnetic or paper tape readers, tablets, styluses, voice or handwriting recognizers, biometrics readers, or other computers. CPU **922** optionally may be coupled to another computer or telecommunications network using network interface **940**. With such a network interface, it is contemplated that the CPU might receive information from the network, or might output information to the network in the course of performing the above-described method steps. Furthermore, method embodiments of the present invention may execute solely upon CPU **922** or may execute over a network such as the Internet in conjunction with a remote CPU that shares a portion of the processing.

[**0142**] In addition, embodiments of the present invention further relate to computer storage products with a computer-readable medium that have computer code thereon for performing various computer-implemented operations. The media and computer code may be those specially designed and constructed for the purposes of the present invention, or they may be of the kind well known and available to those having skill in the computer software arts. Examples of computer-readable media include, but are not limited to: magnetic media such as hard disks, floppy disks, and magnetic tape; optical media such as CD-ROMs and holographic devices; magneto-optical media such as floptical disks; and hardware devices that are specially configured to store and execute program code, such as application-specific integrated circuits (ASICs), programmable logic devices (PLDs) and ROM and RAM devices. Examples of computer code include machine code, such as produced by a compiler, and files containing higher level code that are executed by a computer using an interpreter.

[**0143**] Although the foregoing invention has been described in some detail for purposes of clarity of understanding, it will be apparent that certain changes and modifications may be practiced within the scope of the appended claims. Therefore, the described embodiments should be taken as illustrative and not restrictive, and the invention should not be limited to the details given herein but should be defined by the following claims and their full scope of equivalents.

Appendix

[**0144**] psparams.size=sizeof(PDPrintParamsRec);

[**0145**] psParams.emitPS=true;

[**0146**] /* PostScript printing */

[**0147**] psParams.psLevel=PSLevel; /*PS Level-1 or 2*/

[**0148**] psParams.outputType=PDOutput$_{13}$ EPSNoPrev;

[**0149**] psParams.incBaseFonts=kincludeNever;

[**0150**] psParams.incEmbeddedFonts=kincludeOncePerDoc;

[**0151**] psParams.incType1Fonts=kincludeOncePerDoc;

[**0152**] psParams.incTrueTypeFonts=kincludeOncePerDoc;

[**0153**] psParams.incCIDFonts=kincludeOncePerDoc;

[**0154**] psParams.incType3Fonts=kincludeOnEveryPage;

[**0155**] psParams.incProcsets=kincludeOncePerDoc;

[**0156**] psParams.incOtherResources=kincludeOncePerDoc;

[**0157**] psParams.emitTTFontsFirst=false;

[**0158**] psParams.emitShowpage=false;

[**0159**] psParams.emitDSC=true;

[**0160**] psParams.setupProcsets=true;

[**0161**] psParams.emitColorSeps=true;

[**0162**] psParams.emitRawData=false;

[**0163**] if (PSLevel==1)}

[**0164**] psParams.binaryOK=false;

[**0165**] {else}

[**0166**] psParams.binaryOK=true;

[**0167**] {

[**0168**] psParams.TTasT42=true;

[**0169**] psParams.scale=100.0;

[**0170**] psParams.emitHalftones=true;

[**0171**] psParams.centerCropBox=true;

[0172] psParams.emitPageRotation=false;

[0173] if (AllowRGB)

[0174] psParams.emitSeparablelmagesOnly=false;

[0175] else

[0176] psParams.emitSeparablelmagesOnly=true;

[0177] psParams.emitExtGState=true;

[0178] Logf(SUBSYS_MAIN, "PDFLPrintPDF");

[0179] PDFLPrintPDF(PDFDocument, Destination-PathName, &psParams);

We claim:

1. A method of converting a file from PDF to PostScript within an automated printing system for producing printed materials, said method comprising:

storing said file in a database in communication with said automated printing system, said file including instructions for printing said printed materials;

requesting of a master service hosted on a server computer that conversion of said file be performed;

requesting of a conversion software module that conversion of said file be performed;

executing a PDF to PostScript software tool under control of said conversion software module, said software tool performing conversion of said file; and

outputting the resulting file from said software tool, whereby PDF to PostScript conversion of said file is performed automatically.

* * * * *