March 29, 1938. D. M. WARREN 2,112,474

TOY STRUCTURE

Filed April 7, 1937 4 Sheets-Sheet 1

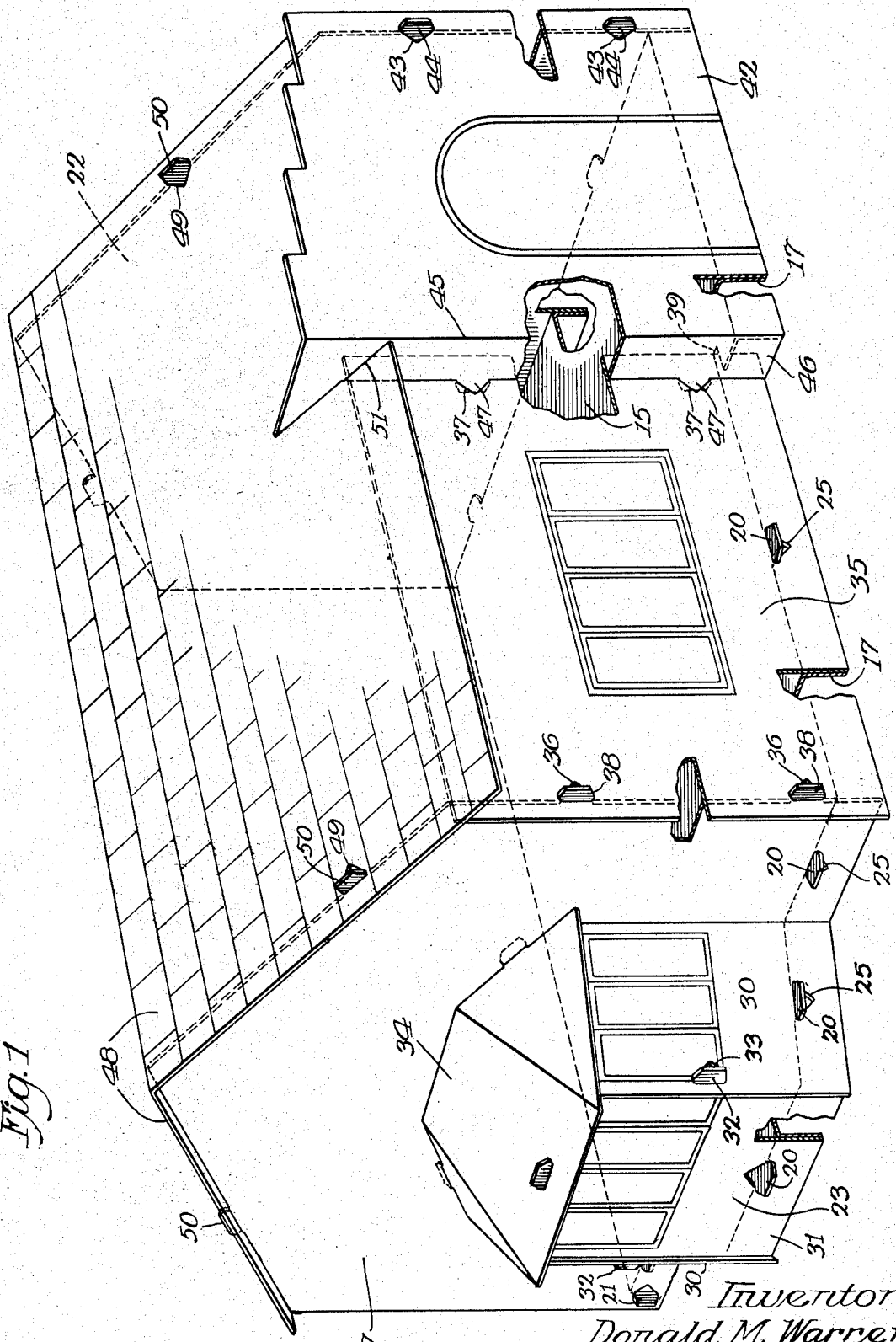

Fig. 1

Inventor:
Donald M. Warren
By Fisher, Clapp, Soans & Pardee Attys

March 29, 1938. D. M. WARREN 2,112,474

TOY STRUCTURE

Filed April 7, 1937 4 Sheets-Sheet 2

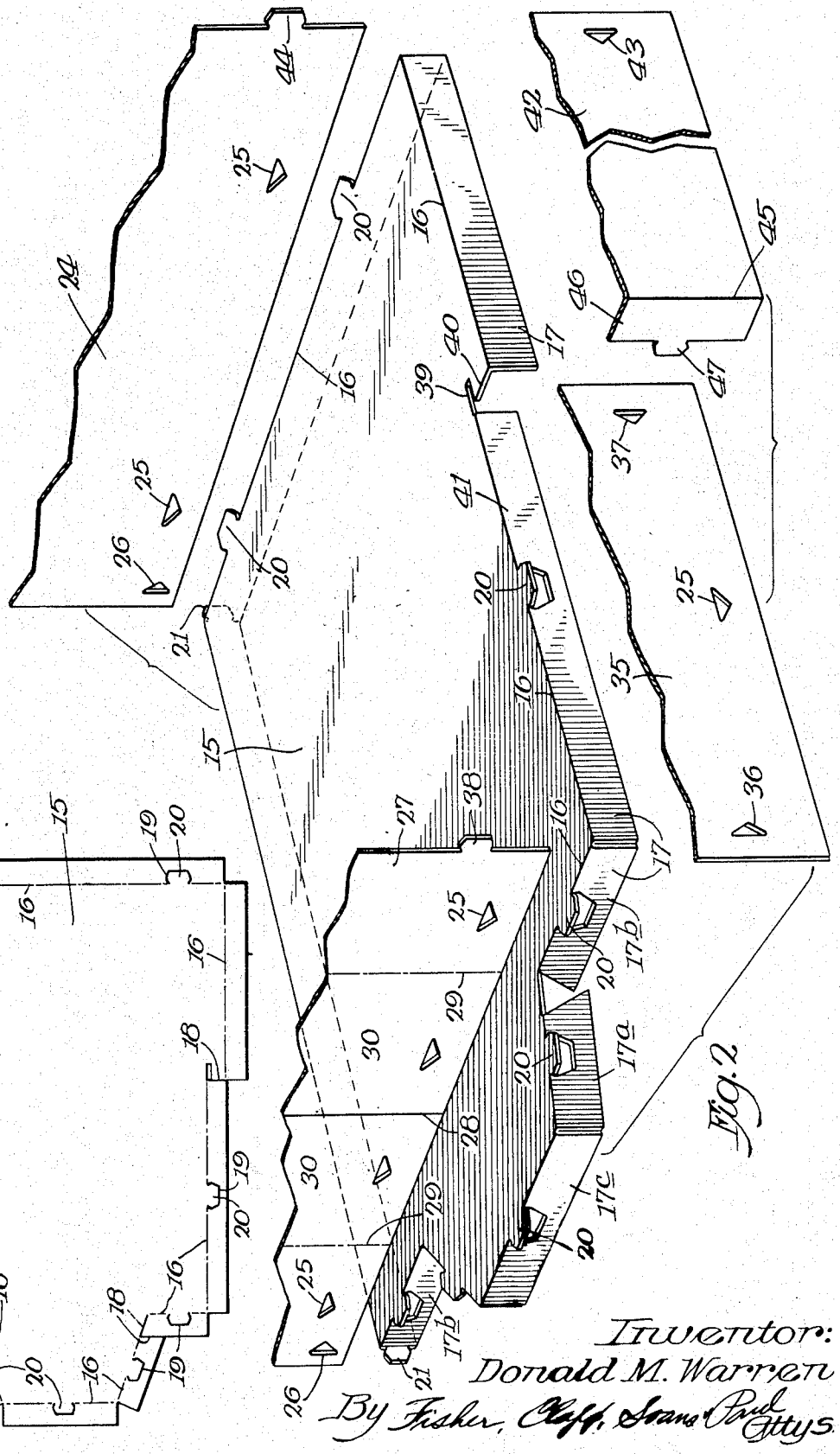

Fig. 2

Fig. 3

Inventor:
Donald M. Warren
By Fisher, Cluff, Evans & Pond Attys.

March 29, 1938. D. M. WARREN 2,112,474

TOY STRUCTURE

Filed April 7, 1937 4 Sheets-Sheet 3

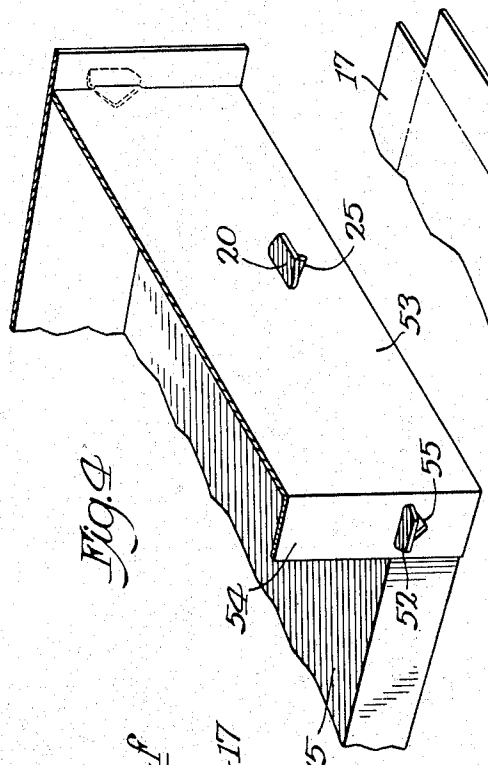

Fig. 4

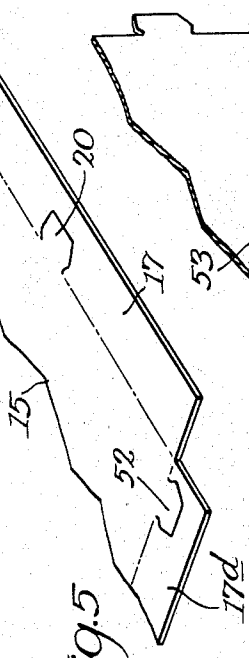

Fig. 5

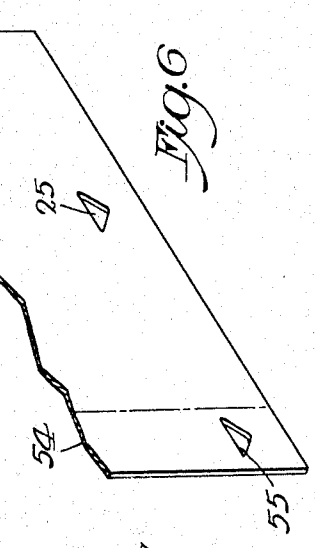

Fig. 6

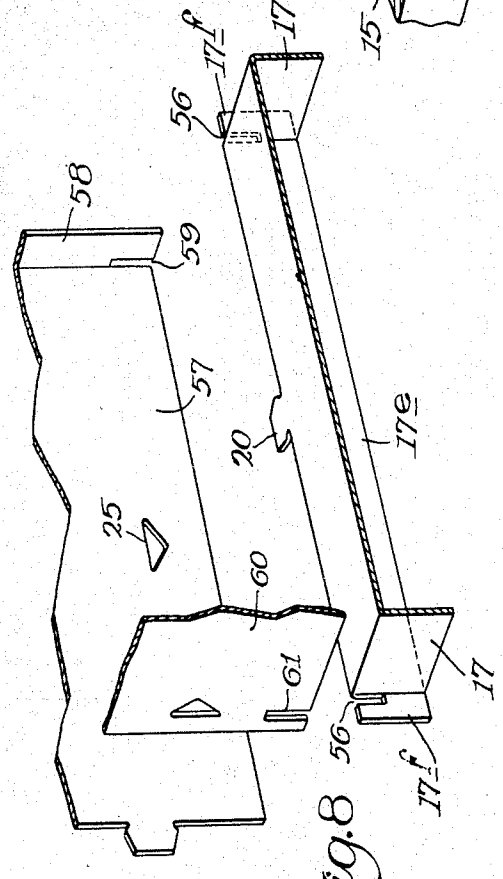

Fig. 8

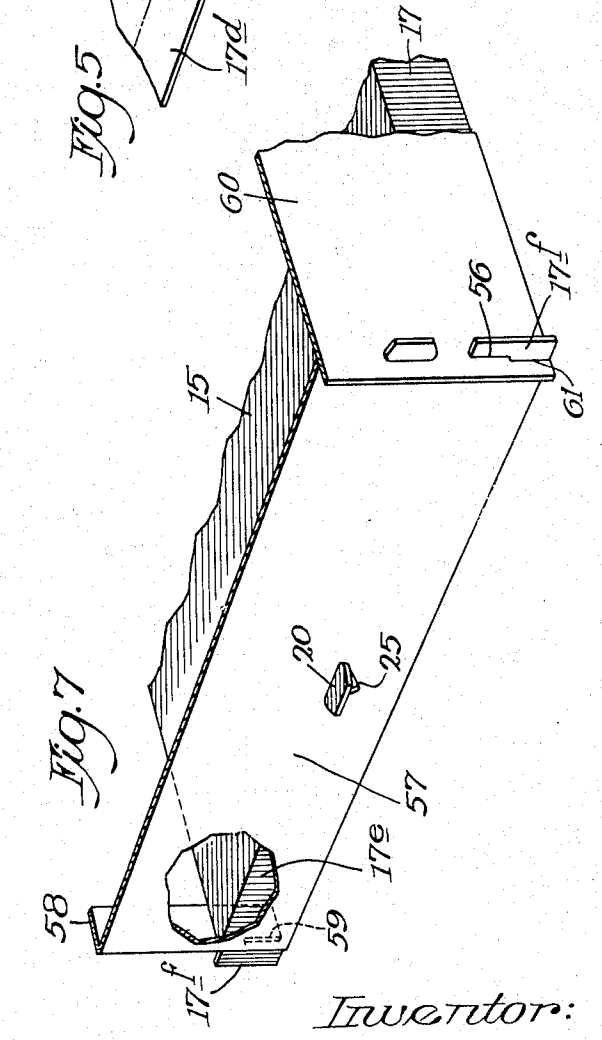

Fig. 7

Inventor:
Donald M. Warren
By Fisher, Clapp, Soans & Pond Attys.

March 29, 1938. D. M. WARREN 2,112,474

TOY STRUCTURE

Filed April 7, 1937 4 Sheets-Sheet 4

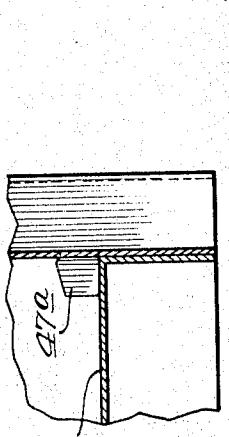

Fig. 11

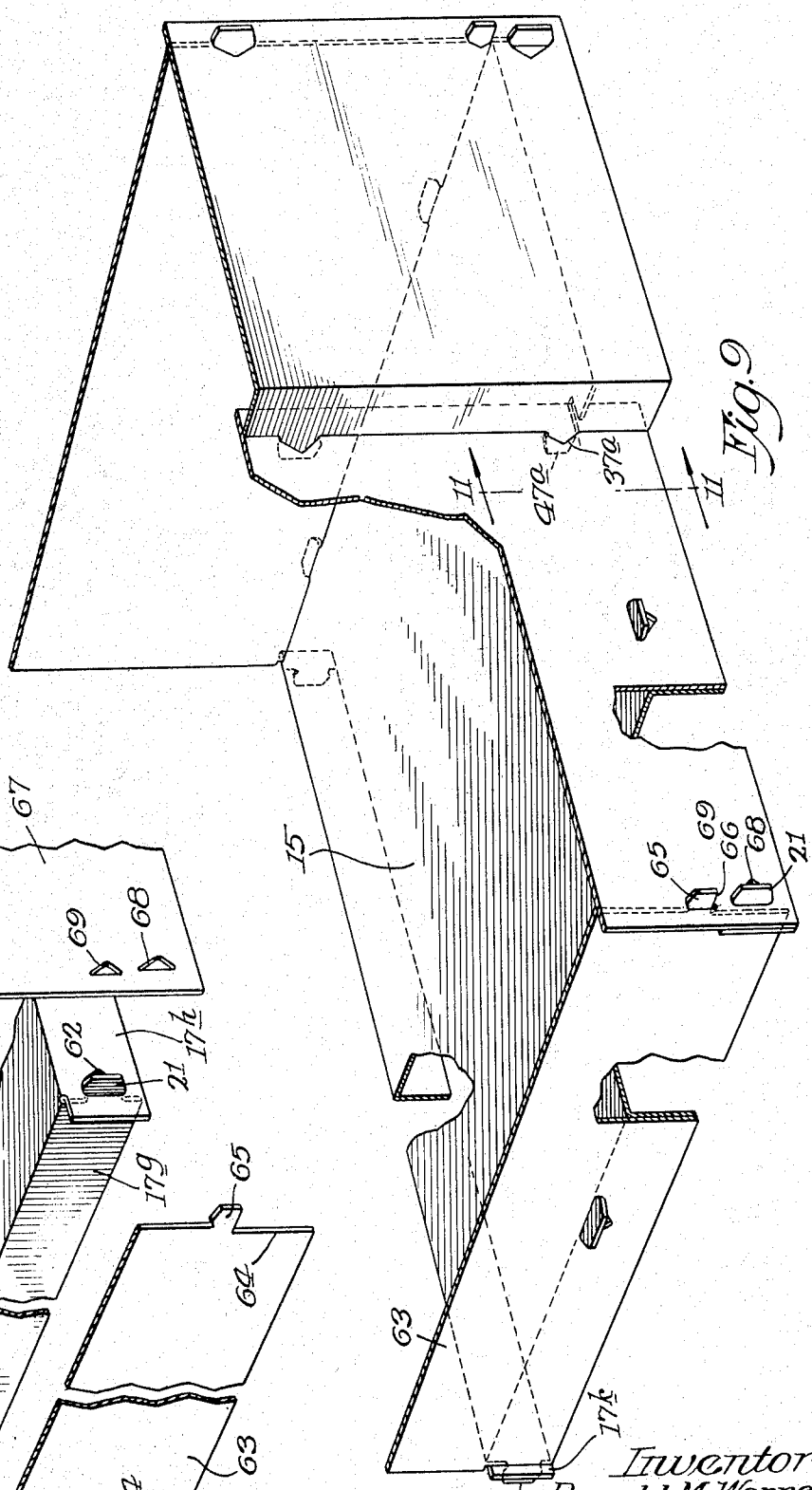

Fig. 9

Fig. 10

Inventor:
Donald M. Warren
By Fisher, Clapp, Soans & Pearl Attys.

Patented Mar. 29, 1938

2,112,474

UNITED STATES PATENT OFFICE

2,112,474

TOY STRUCTURE

Donald M. Warren, West Lafayette, Ind.

Application April 7, 1937, Serial No. 135,358

6 Claims. (Cl. 46—21)

This invention relates to improvements in a toy structure and more particularly to improvements in the construction of such toys as paperboard doll houses and other forms of toy buildings. The invention also contemplates improvements adaptable to the construction of toy articles which represent only a single room.

The main objects of the invention are to provide a structure which may be sold in a collapsed condition and which may be easily and quickly set up into a house or room by a young child; to provide a structure which when set up, is rigid and will remain in set up condition and the parts of which will not tend to come apart and collapse; to provide a structure which may be collapsed to a flattened condition in which it may be conveniently and practicably packaged in an envelope instead of the usual more expensive box; to provide a structure which may be made economically and at low cost so as to be adapted to be retailed at very low prices; and in general, it is the object of the invention to provide an improved toy structure of the class described.

Other objects and advantages of the invention will be understood by reference to the following specification and accompanying drawings (4 sheets), wherein there is illustrated a toy structure embodying a selected form of the invention and certain modifications thereof.

In the drawings:

Fig. 1 is a perspective illustrating a set-up structure embodying a preferred form of the invention.

Fig. 2 is an exploded perspective view illustrating a base part and the lower portions of certain of the walls.

Fig. 3 is a plan of the base in collapsed condition.

Fig. 4 is a perspective of an end portion of a house structure similar to that illustrated in Figs. 1 to 3 inclusive, but embodying a modified detail of construction.

Fig. 5 is a perspective illustrating the end portion of the base element of Fig. 4 in flattened condition.

Fig. 6 is a perspective of a wall portion forming a part of Fig. 4, but showing the same in collapsed condition.

Fig. 7 is a perspective illustrating still another form of construction in respect of certain fastening details.

Fig. 8 is an exploded perspective of the structure shown in Fig. 7, from which the relationship of the parts may be more easily determined.

Fig. 9 is a perspective corresponding to a portion of Fig. 1, but showing the structure as embodying certain other modified details of construction.

Fig. 10 is an exploded perspective of a corner portion of the structure shown in Fig. 9, and

Fig. 11 is a section on the line 11—11 of Fig. 9.

Referring now to the drawings, the structure shown in Figs. 1 to 3 inclusive embodies a base member 15 which is preferably formed of paperboard of such thickness as will afford the desired stiffness and strength. The base member, when in collapsed condition as shown in Fig. 3, is provided with score lines such as indicated at 16 which are spaced inwardly from and are disposed parallel with the respectively adjacent free edge portions of the blank. The marginal portions of the blank outwardly of the fold lines 16 are adapted to be folded downwardly so as to constitute flanges 17, 17 depending from the edges of the base which are then defined by the said fold lines 16. As indicated in Fig. 3, certain of said marginal portions are separated from adjacent marginal portions and from the body of the base by slits such as indicated at 18 which permit the various flange portions to be folded downwardly as explained.

For purposes which will presently appear, tongues where desired, are provided on the edges of the base member, the said tongues being cut out of the respective marginal or flange-forming portions. The tongues are formed by slitting the said flange-forming portions as indicated at 19, the said slitting being continuous around three sides of the tongue so as to define tongues which project edgewise from the main body of the base in continuation of the normal plane thereof. It will be observed that the fold lines 16 are interrupted across the widths of the tongues so that when the flanges are folded downwardly, the tongues remain in their normal flatwise position relative to the main body of the base. The various tongues which are formed by being cut out of the foldable marginal portions are designated 20. Similar tongues 21, 21 are formed on the ends of one of the flanges 17 which in this instance constitutes the rear edge of the structure. As clearly indicated in Fig. 3, the tongues 21 are of somewhat less width than the tongues 20, this being incident to the limited width of the foldable marginal portions on which said tongues 21 are formed.

As shown in Fig. 1, the structure embodies a main house portion 22 and an auxiliary house portion 23 which projects from one end wall of the structure. The base member 15 consti-

tutes the floor element for the structure and, as shown, it is equipped with an integral extension which constitutes a floor portion for the said auxiliary or bay window portion 23.

At one end of the structure there is an end wall 24 which is provided with a pair of openings 25, 25 adapted to receive the tongues 20 which project from the adjacent end of the base. The tongue and opening structure is preferably of the type indicated which includes tongues humped somewhat intermediate their lengths so that when they are projected through the openings they tend to have a snap locking effect for holding the wall member against the end of the base. The lower marginal portion of the end wall 24, i. e. that portion below the upper edges of the openings 25, overlaps the depending flange 17 on the end of the base. By reason of the indicated anchorage of the end wall to the base, the wall will be effective to maintain the flange in its depending folded condition against the inherent tendency thereof to unfold to the initial flat form of the blank of which the base is formed.

The end wall 24 is further provided with an opening such as indicated at 26 for receiving the end tongue 21 of the rear edge flange. By thus connecting the rear flange with the end wall, the rear flange is also held in its downwardly folded position, even though no rear wall is provided in overlapping relation to the said rear flange.

At the other end of the house structure, an end wall 27 is provided, the latter being provided with a slit as indicated at 28 and with fold lines 29, 29 at a suitable elevation from the lower edge of the end wall 27, so as to permit the end wall portions 30, 30 respectively located intermediate the slit 28 and the opposite fold lines 29, 29, to be folded outwardly to fit against the depending flange portions 17a of the base, while the front and rear end portions of the end wall, i. e. those portions outwardly of the fold lines 29, 29 fit against the end flanges 17b of the base. As indicated, the end wall 27 is provided with suitable openings for engaging the various tongues 20, for anchoring the end wall to the base. The rear end of the end wall 27 is also provided with an opening for receiving the adjacent end tongue 21 for the purpose already indicated. The extreme end portion 17c of the bay window portion of the base receives a separate end wall 31 which is suitably apertured to receive the tongue 20. The wall 31 is further locked in place by being provided with tongues such as indicated at 32, 32 which interlock with suitable openings such as indicated at 33 in the respective wall portions 30. A roof element 34 properly shaped and equipped with fold lines to permit its bending to the form indicated, covers the upper end of the auxiliary portion 23 of the structure, and it is secured in place by tongue and opening connections with the walls of the auxiliary structure and the end wall 27 substantially as indicated.

It will be understood, of course, that the various wall elements and roof elements heretofore referred to and those which will presently be mentioned, are preferably formed of suitable grades of paper-board and that the fold lines mentioned may be formed by creasing or scoring or in any other approved manner.

To improve the appearance of the structure, it is equipped with a front wall having an offset as shown. One front wall portion is designated 35, the same being equipped with a suitable opening 25 to receive the base tongue 20. It is also provided with other openings such as indicated at 36 and 37, those indicated at 36 being adapted to receive tongues such as 38 which extend edgewise from the end wall 27. The length of the front wall portion 35 is preferably somewhat in excess of the length of the corresponding base flange portion, so that the openings 36 and 37 may each be spaced inwardly from the adjacent ends of the wall part. To permit the inner end of the wall 35 to be positioned against the base flange 17, the base is provided with a notch 39 in the edge portion 40 of the base, the said notch extending substantially in alignment with the inwardly recessed edge portion 41 of the base (Fig. 2). The notch 39 receives an end portion of the wall 35 and has the desirable effect of cooperating with the tongue 20 on said edge 41 to hold the wall 35 in assembled relation with the base.

Another front wall part, designated 42, is provided with openings indicated at 43 for receiving edge tongues 44 of the end wall 24, so as to lock the wall portion 42 to the front edge of the said end wall. The front wall portion 42 is further provided with a fold line 45 which permits the wall member to be bent to provide the narrow wall portion 46 which, when assembled with the front wall portion 35, extends outwardly therefrom. The inner edge of the wall portion 46 is equipped with tongues such as indicated at 47 for entering the openings 37 in the wall portion 35 to thereby lock said wall portion 46 to the wall portion 35.

A roof member 48 of generally rectangular form and provided with a lengthwise extending fold line is adapted to be folded to fit the peaked upper ends of the end walls. The said roof member may be fastened in place by the provision of openings such as indicated at 49 for receiving tongues such as 50 which project upwardly from the said peaked upper edges of the end walls 24 and 27. The front edge of the roof may be slotted at 51 to embrace the thickness of the wall portion 46 and whereby the said wall portion is more firmly held against unfolding movement.

It will, of course, be understood that the various folded parts have a normal tendency to spring back from their fully folded position (usually at right angles to the portions from which they extend) to initial flat position. This is true even though the fold lines be made by slitting the paper-board stock part way through its thickness which produces a sharp fold which enhances the appearance of the structure. It will be also understood that the various wall, the roof and the floor parts of the structure, may be suitably embossed to represent doors, windows, brick, shingling, interior trim and other designs appropriate to the various portions of the structure.

The described structure when set up has been found to be surprisingly rigid and stable. It has the desirable advantage that when disassembled the base may be unfolded to the flat condition illustrated in Fig. 3, whereupon the various other parts of the structure may be stacked on top of the flattened base preparatory to wrapping or packaging, for example in a conventional envelope. The interconnection of the various walls with each other and with the roof structure serves to prevent the said walls from wavering inwardly or outwardly, so that they are rigidly maintained in the substantially vertical position desired. Due to their effective attachment to the edges of the base, the lower marginal portions of the walls effectively maintain the base flanges in their downwardly folded condition. The flanges

17 are of such width that when the structure is placed on a table surface or floor, they rest on the same so as to relieve the wall portions of any duty of supporting the structure from the surface mentioned. By so relieving the wall structure, there is no tendency for the walls to be forced off the various tongues which connect them to the base.

In Figs. 4, 5 and 6, the base 15 is provided with marginal fold lines to facilitate the forming of flanges 17 substantially as described in connection with Fig. 3, but the rear flange 17a is not provided with end tongues such as the tongues 21. Instead, tongues such as indicated at 52 are provided near the ends of the base, substantially in the same manner that the tongues 20 are provided, and the end wall 53 is provided with a foldable rear edge portion 54 which is adapted to be folded around the back edge of the structure to overlap the adjacent end portion of the rear flange 17a. The said wall portion 54 is equipped with an opening 55 for receiving the tongue 52 to lock the wall in said overlapping relation to the flange 17d.

The structure shown in Figs. 7 and 8 embodies still another detail of construction for maintaining the base flanges in their folded condition. In this form of construction the end flanges 17e are provided with end extensions 17f and the latter are notched as indicated at 56, the said notches having their inner edges in alignment with the outer faces of the front and rear flanges 17 of the base. The width of the slots 56 approximately equals the thickness of the cardboard stock from which the wall portions are formed. An end wall 57 is equipped with a rear flange portion 58 having a notch 59 in its lower end adapted to cooperate with the notch 56 in the rear end extension 17f of the end flange 17e. As indicated, the notches 56 and 59 cooperate to permit the wall portion 58 to bridge over the end flange extension 17f so as to overlap the adjacent end portion of the rear flange 17 of the base. When so assembled the rear wall flange 58 is prevented by the overlapping upper portion of the flange end extension 17f from unfolding. Hence, the rear flange 17 of the base is effectively maintained in its folded condition. A front wall 60 is provided with a notch 61 in its lower edge for cooperating with the notch or slot 56 in the front end extension 17f so as to permit the wall 60 to be assembled with the base so that the lower marginal portion of the wall overlaps the front flange 17. The wall 60 and front edge of the end wall 57 may additionally be equipped with one or more tongue and opening connections such as indicated. It will be seen that the interlocking notched arrangement shown in Figs. 7 and 8 effectively locks all of the base flanges in their folded position and provides means whereby the walls of the structure may be connected to the base without the use of connections formed by tongues such as 20 and openings such as 25. However, it is preferred that a few of such tongue and opening connections be provided so as to prevent the base structure from dropping out of the wall structure if the house is lifted by its walls and the interlocking slots happen to be a loose fit as they may become after the structure has been assembled and disassembled a considerable number of times.

In Figs. 9 to 11, there is shown a structure in which the base 15 has its end flaps 17g provided with tongues such as 21 and its front and rear flaps 17h and 17k provided with suitable openings 62 for receiving the said end tongues 21 when the flanges are folded to their operative position as illustrated. The end wall part 63 is suitably notched or recessed as indicated at 64 at the lower ends of its front and rear edges to fit around the end extensions of the base flanges 17h and 17k, and it is further provided with a forwardly extending tongue 65 which has its lower edge 66 substantially flat and adapted to extend over the upper edge of the adjacent end extension of the front flap 17h. The front wall 67 is provided with openings such as indicated at 68 and 69 for respectively receiving the tongues 21 and 65 to lock the front wall to the end wall and to the base as will be clearly understood. For some purposes it is preferable that the base member 15 be provided with extra wide flanges so as to elevate the normal floor level considerably above the surface on which the toy structure may be placed. In such instances, the tongue and opening connection 37—47 in the arrangement shown in Fig. 1 at the bottom of the structure, would have to be so far removed from the lower edge of the wall that there might be an objectionable tendency of the wall to spread from the front flange of the base structure. In order to maintain the tongue and opening connection at the lowest practical location, the lowermost tongue 47 in Fig. 1 may be replaced by a tongue such as indicated at 47a in Figs. 9 and 11. The tongue 47a may be described as a half tongue and the opening 37a for receiving such tongue is modified accordingly. The location of the tongue and opening 47a—37a is preferably such that the tongue 47a will rest on the top surface of the floor part 15 as clearly shown in Fig. 11. In this arrangement the tongue 47a serves not only to anchor the connected wall portions together, but also to prevent upward warping of the adjacent base portion relative to the wall parts.

In the described structures, no expensive forming operations are required. All of the parts are adapted to be produced on ordinary folding-box making machines which operate at relatively high speed and almost wholly automatically. Hence, the cost of production is maintained low. Also, as already indicated, since the various parts may be collapsed to flat condition they may be conveniently and neatly packaged either by wrapping or by insertion in an envelope, thereby eliminating the need for any form of box such as has been more or less of a necessity with present day conventional constructions.

Changes in the described constructions may be made without departing from the spirit of the invention, the scope of which should be determined by reference to the following claims, the same being construed as broadly as possible consistent with the state of the art.

I claim:

1. A toy structure comprising a paper-board member provided with angularly disposed edges forming a reentrant angle, said member having a notch therein opening on one of said edges and extending substantially in alignment with the other edge, a wall part disposed against said other edge and having a portion extending into said notch, a second wall part disposed against said notched edge and having an end abutting said first mentioned wall part, and means for maintaining said wall parts and member in assembled relation.

2. A toy structure comprising a flat paper-board member having a pair of side edges extending angularly relative to each other, said

member being provided with fold lines spaced inwardly from said angularly related edges for facilitating folding of marginal portions of said member to flange-forming position on the member, one of said marginal portions having an end extension adapted to project beyond the plane of the other when folded to said flange-forming position, and said extension having a notch opening to one edge thereof, a wall member adapted to be positioned against said other flange and having an edge portion provided with a notch adapted to cooperate with said notched extension to interlock said wall and extension, thereby to maintain said flanges folded and to position said wall relative to said member.

3. A toy structure comprising a flat paperboard floor member provided with a fold line for facilitating folding of a marginal portion thereof to depending, flange-forming relationship to the normal plane of the member, a paperboard wall part adapted to be positioned against the outside of said marginal portion when folded to said flange-forming position, and tongue means extending from said member substantially in continuation of the normal plane thereof and cut from said folded marginal portion for anchoring said wall part to said member.

4. A toy structure comprising a flat paperboard member having a pair of side edges extending angularly relative to each other, said member being provided with a fold line spaced inwardly from one of said angularly related edges for facilitating folding of a marginal portion of said member to flange-forming position on the member, a wall adapted to be positioned against one of said edges of said member, means for anchoring said wall part when so positioned to said member, and tongue means extending endwise from an end of said marginal portion and having interlocking engagement with said wall part, whereby said marginal portion is adapted to be maintained in said flange-forming relationship to the member.

5. A toy structure comprising a flat paperboard member having a pair of relatively angularly disposed edges and provided with a fold line adjacent one of said edges to facilitate folding of a marginal portion of the member to angular, flange-forming relationship to the normal plane of the member, a side wall positioned against one of said edges and having an end extension adapted to be folded to overlie the adjacent end portion of said marginal portion when folded to said flange-forming position, and means for locking said extension in said overlying position.

6. A toy structure in accordance with claim 3 and in which the wall part is provided with openings adapted to receive the tongue means for the purpose set forth.

DONALD M. WARREN.