Sept. 29, 1953 D. A. NEWMAN 2,653,830

MANIFOLDING

Filed Aug. 10, 1948 2 Sheets-Sheet 1

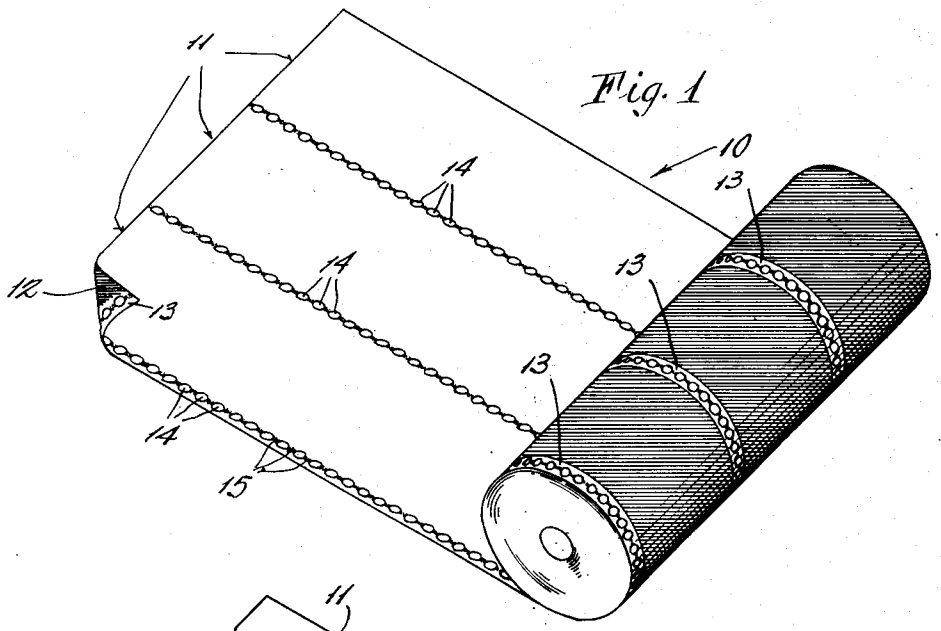

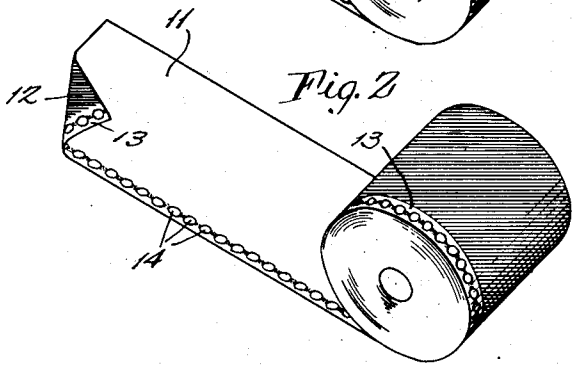

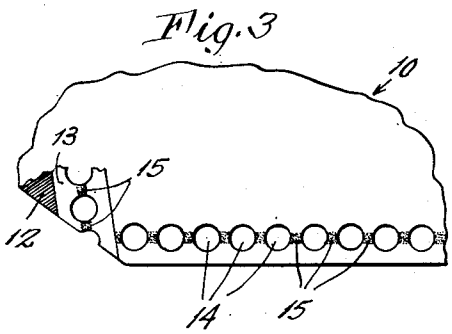

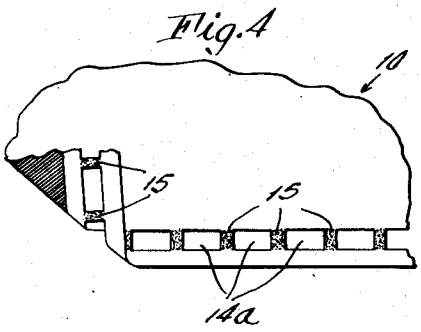

INVENTOR.
Douglas A. Newman
BY
Johnson and Kline
ATTORNEYS

Fig. 5

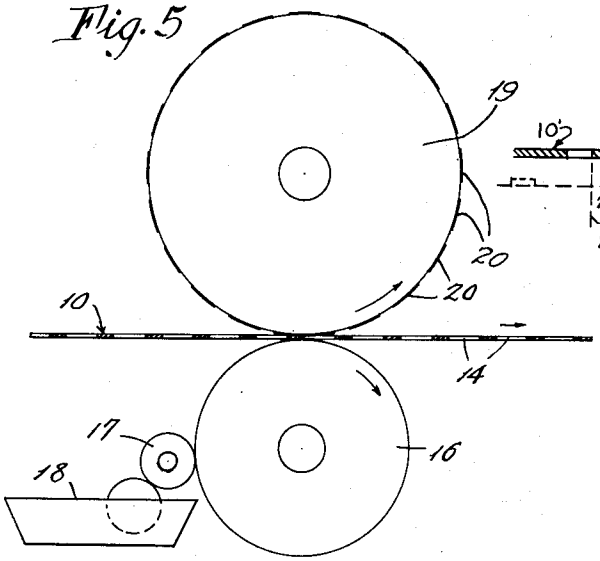

Fig. 5a

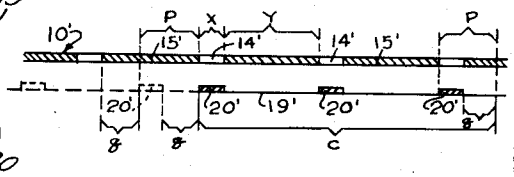

Fig. 6

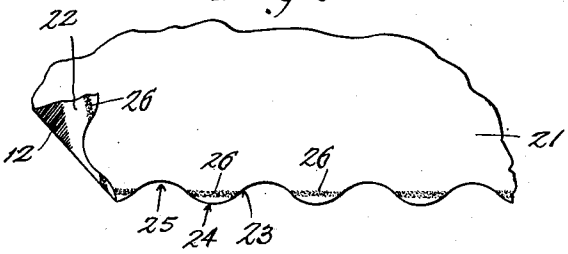

Fig. 7

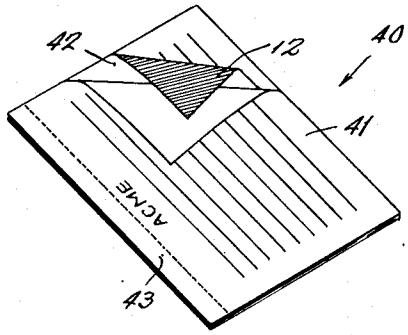

INVENTOR.
Douglas A. Newman
BY
Johnson and Kline
ATTORNEYS

Patented Sept. 29, 1953

2,653,830

UNITED STATES PATENT OFFICE

2,653,830

MANIFOLDING

Douglas A. Newman, Sea Cliff, N. Y., assignor to Columbia Ribbon and Carbon Manufacturing Company, Inc., Glen Cove, N. Y., a corporation of New York

Application August 10, 1948, Serial No. 43,399

14 Claims. (Cl. 282—19)

1

This invention relates to manifolding and particularly to an improved transfer or carbon strip for use in the manufacture of manifolding sets formed of record sheets or strips collated with one or more such carbon sheets or strips.

More particularly this invention relates to improvements in carbon sheets or strips of the general type in which the sheet or strip has a marginal portion which carries a normally inert or inactive adhesive, thus providing for attachment of itself to adjacent record sheets or strips by activating the adhesive.

When a carbon strip is prepared in this manner, and particularly when there are two opposite adhesive applications, a substantial difference in thickness exists between the carbonized portion and the adhesive-carrying portion thereof and winding of the strip on a core to form a roll, as it leaves the coating machine for instance, is impractical because the hills and valleys formed on the roll by the uneven thickness cause the web to crinkle or break, or both.

It is an object of the invention, therefore, to produce a strip or web of transfer or carbon material having one or more adhesive applications, which strip or web is so constructed that it can be readily wound to form a roll without damage to itself.

The type of adhesive to be used may generally be determined by practical considerations since the present invention may be carried out using a wide variety of materials. The only restriction is that the adhesive coating must be rendered dry or inactive in the relatively short period of time required in a practical production process for the web to travel from the coating device to the collecting or winding station. This drying may be accomplished through proper choice of the adhesive and vehicle, by after-treatment of the adhesive coating, or by a combination thereof.

As a means for preventing the crinkling or breaking of the web, the adhesive carrying portions thereof are, according to the present invention provided with vacuities, preferably apertures, suitably arranged to compensate for the portions having double adhesive coatings and thereby permit winding of the strip into a roll having wrinkle-free convolutions.

The provision of a series of vacuities in the web, in addition to its compensating function is also desirable from the standpoint of simplifying the application of adhesive thereto, when such vacuities are in the form of apertures. With this arrangement one side of the web can be coated by means of a fountain-fed coating roller, while

2

the opposite side is coated by contact with a suitably dimensioned backing roller which receives its coating material from the coating roller through the apertures in the web, thereby obviating the necessity for an additional fountain, and this method of coating opposite faces of the web is an important feature of this invention.

An important feature of the invention therefore, is the production of a web which is coated on both sides and which is provided with apertures so arranged that the coating can be applied by means of a pair of rollers only one of which is fed from a fountain.

This invention further includes as an important feature thereof, a strip having either a single or double intermittently coated margin wherein the coating is applied to the margin in a substantially straight band or bands, the margin having an undulatory or serrated edge so that only the projecting portions of the margin receive the coating.

Other objects and advantages will hereinafter appear.

In the drawings:

Figure 1 is a perspective view of a coated web of transfer material prior to slitting into strips and made in accordance with the present invention.

Fig. 2 is a perspective view of a roll of transfer material made in accordance with the present invention.

Fig. 3 is an enlarged fragmentary plan of a portion of the web of Fig. 1 showing the apertures therein and the adhesive application thereto.

Fig. 4 is an enlarged fragmentary plan of a portion of a web according to the invention and illustrating a modified opening configuration.

Fig. 5 is a schematic elevation illustrating one form of mechanism used in applying adhesive to an apertured web or strip.

Fig. 5*a* is a diagrammatic section showing a perforated strip placed adjacent the development of the surface of a modified backing roller with adhesive spots thereon for purposes of comparison and relative measurement.

Fig. 6 is an enlarged fragmentary plan of a portion of a strip illustrating a modified form wherein the vacuities are in forms of discontinuities of the margin of the strip produced by undulations in the edge of the strip.

Fig. 7 is a perspective view of a manifolding set employing carbon sheets made in accordance with the present invention.

In the manufacture of carbon paper it is con-

venient and economical to produce the same by passing a web having a width equal to the width of several carbon strips through a coating process, and to slit the same into separate strips thereafter. Such strips may then be collated with record strips to form continuous manifold sets, or may be chopped into sheets for collating with record sheets to ultimately produce individual sets. At any point in the process where it is desired to collect either the web or the strip, this step is most conveniently accomplished by winding the same upon a core to form a roll.

One embodiment of the present invention is shown in Fig. 1 in which a wide web **10** of carbon paper is wound to form a roll. This web is of such width as to be capable of being slit into a number of single strips **11**, shown here as three for the sake of simplicity. The major portion of the web is coated, usually on one side only, with a transfer or carbonizing composition **12**, while a plurality of stripes **13**, one of which is usually marginal, are left without transfer or carbon coating for the reception of adhesive. These uncarbonized portions, according to the preferred form of the present invention, are each provided with a row of apertures or perforations **14** shown as circular in Figs. 1 to 3, and according to the modification of Fig. 4, are shown as rectangular apertures **14***a*. Said portions **13** are further provided with adhesive material **15** applied thereto on both surfaces in bands intersecting and no wider than the perforations. Such a double application of adhesive, in the absence of removal of some of the web material, as by forming the apertures **14** or **14***a*, would normally make the stripe portions **13** of the web with the adhesive thereon, excessively thick so that winding thereof for the purpose of collecting the strip after coating, or for storage purposes, would normally be rendered impractical due to the crinkling, tearing, or both, which would result from the uneven thickness across the web. My invention contemplates the provision of vacuities such as the apertures **14** or **14***a* suitably arranged and spaced to compensate for the excessive web thickness occasioned by the double adhesive application to regional portions of the web.

The area of the vacuities and the area of the adhesive coatings between them will depend upon the thickness of the adhesive coatings, the thickness of the base material of web **10** and the thickness of the coating **12** of carbon material carried by the web. Since these thicknesses vary over wide ranges in the manufacture of carbon paper, no practical formulae can be prescribed. Suffice it to say that sufficient material is left in the stripe portions **13** that this with the adhesive material will pile up at substantially the same rate, when the web is wound into a roll, as the carbon-coated portions of the web.

Fig. 2 illustrates an alternate form of my invention wherein a single width strip of carbon paper **11** including a single stripe portion **13** is shown. This structure is the product resulting from the slitting of the web **10** of Fig. 1. Such an article may, however, be produced in this form without passing through the initial multiple strip or wide web stage if desired.

With reference to the apparatus and method for applying adhesive to the web or strip of Figs. 1 to 4, a further advantage obtains from the structure described in that the adhesive areas **15** may be applied to both faces simultaneously by a single pair of rollers, only one of which is fed by a fountain. This arrangement is illustrated

schematically in Fig. 5 wherein **10** is the web of transfer material to which adhesive is to be applied. A coating roller **16** having a surface width equal to the width of the desired adhesive application, is fed by intermediate roller **17** from a fountain **18** charged with appropriate adhesive material. A backing roller **19** is urged against the opposite face of the strip and is at least as long and preferably longer than the coating roller **16**. Rollers **16** and **19** are both driven by frictional contact or otherwise at a speed such that their surfaces travel at substantially the same speed as the moving strip.

The operation of the device shown in Fig. 5 is as follows:

A continuous layer of adhesive material of substantially constant thickness is picked up by roller **17** from fountain **18** and deposited continuously on the surface of coating roller **16**. Coating roller **16** continuously transfers this material to the surfaces with which it contacts. In certain angular positions the material will be applied to the adjacent surface of the strip **10**, while in alternate angular positions the apertures **14** or **14***a* in the stripe portions will permit the adhesive material to pass through the web and be deposited upon the surface of the backing roller **19**. When the backing roller is properly dimensioned with respect to the size and spacing of the apertures **14** or **14***a*, the spots of adhesive **20** applied thereto will be carried through one revolution and deposited upon the strip face opposite to that which engages coating roller **16** so that both surfaces of the strip will have adhesive applied thereto.

One example of the manner in which the calculation of the proper peripheral dimension for a backing roller such as **19** may be made is as follows:

Considering that the length of a gap such as **14** or **14***a* in Fig. 3 or 4 is x, and the length of the bridge or adhesive-carrying portion of the web between gaps is y, and one complete change or period including one gap and one bridge is $x+y$, the circumference of the roller must be something other than an exact multiple of the period $x+y$, or else the adhesive spots and the clear spots would exactly correspond with the gaps and bridges respectively after one revolution and no application to the reverse side of the sheet would occur. It is apparent, then, that the circumference c of the backing roller **19** must equal any appropriate integer a (representing the number of complete periods which the backing roller **19** will carry) times the length of a period, e. g. $x+y$, and also plus a further increment or partial period to throw the roller out of phase with the openings in the strip by an appropriate length, for example p.

Hence:

$$c=a(x+y)+p \tag{1}$$

Fig. 5*a* is a diagram illustrating the perforated portion of a strip **10'** measured against the circumference (developed) of a roller **19'** in which a is taken for convenience as 2. The length p is shown both at the end of the circumference and at the beginning thereof (in dotted lines) since the circumference is actually continuous. It will be clear from both showings of the increment p that it is made up of a length x plus a further length q (when x is less than y as in this example). Furthermore, from the left hand view of p, it will be apparent that the further length q, when doubled, must add to x to give y in order to center the adhesive application **20'** on the bridge **15'**.

Hence:

(2) $$x+2q=y$$

$$q=\frac{y-x}{2}$$

and since

$$p=x+q$$

by substituting (2)

$$p=x+\frac{y-x}{2}$$

$$p=\frac{2x}{2}+\frac{y-x}{2}$$

$$p=\frac{2x+y-x}{2}$$

$$p=\frac{x+y}{2}$$

and substituting in (1) above:

(3) $$c=a(x+y)+\frac{x+y}{2}$$

$$c=\frac{2a(x+y)}{2}+\frac{x+y}{2}$$

$$c=\frac{(2a+1)(x+y)}{2}$$

or

$$(a+\tfrac{1}{2})(x+y)$$

The diameter (d) of the roller will accordingly be given by:

$$d=\frac{(2a+1)(x+y)}{2\pi}$$

In Fig. 5 is illustrated a roller **19** made according to the foregoing formulae and having 20 complete periods and one partial period, i. e. where $a=20$, and where the circumference of the roller equals $20.5(x+y)$ and where the diameter consequently equals $6.5(x+y)$.

While the requirements for the size of the backing roller are not rigid, particularly where x exceeds y by a substantial amount, the formulae given above will be found to provide a complete coating of both sides of the strip portions intermediate the apertures when x is at least equal to y, and a partial coating centered on each connecting strip portion when x is less than y.

Fig. 6 illustrates a further modification of the transfer strip of my invention wherein the strip is designated by numeral **21**. Since it is not essential for all purposes that the vacuities in the adhesive carrying portion of the strip be confined within the boundary thereof, the strip **21** may be constructed with an uncarbonized stripe portion **22** having a serrated or undulating edge **23** providing projections **24** alternating with gaps **25**. Zones **26** of adhesive material are carried along the tips of the projections on both surfaces thereof at such a location that the relative areas of the gaps and adhesive-carrying strip portions will bear the proper relative relationship to insure smooth winding.

A manifolding set **40**, shown in Fig. 7, illustrates the use to which the carbon sheets and strips of the invention will normally be put. The set consists of alternate record sheets **41** and carbon sheets **42** bound together along the marginal portion **43** by virtue of the double adhesive applications on the carbon sheets, such adhesive having been activated by heat, pressure, a solvent or softening agent, or by other suitable treatment depending upon the type of adhesive used. The dimensions of the set of Fig. 7 indicate that it is for single manifolding use. A continuous manifolding set results when the dimension parallel to marginal portion **43** is extended, in which

case the elements **41** would be considered record strips, usually provided with repeating forms therealong, and elements **42** would be considered carbon strips, for example, strips **11** or **21** previously described.

Variations and modifications may be made within the scope of this invention and portions of the improvements may be used without others.

I claim:

1. As a new article of manufacture, a transfer medium for manifolding use comprising a web of fabric having a coating of transfer material thereon, a longitudinal row of vacuities in said web, and dry, normally inactive adhesive carried solely by the portions of the web lying between said vacuities, the arrangement of said vacuities and said portions being such that the web is windable without damage to itself.

2. As a new article of manufacture, a carbon-coated manifolding sheet having a marginal row of apertures and dry, normally inactive adhesive material carried solely by the portions of the sheet lying between said apertures, whereby the sheet is windable without damage to itself.

3. As a new article of manufacture, a carbon-coated manifolding sheet having a marginal row of apertures and dry, normally inactive adhesive material carried on both surfaces of said sheet solely by the portions of the sheet lying between said apertures, whereby the sheet is windable without damage to itself.

4. As a new article of manufacture a transfer medium for manifolding use comprising a web of fabric having transfer material applied thereto over a portion of its area, the remainder of its area being free of transfer material, at least a portion of said remaining area being provided with a longitudinal row of apertures, and dry, normally inactive adhesive carried solely by the portions of the web lying between said apertures, the arrangement of said apertures and said portions being such that the web is windable without damage to itself.

5. As a new article of manufacture, a windable transfer medium for manifolding use comprising a strip of fabric carrying a coating of transfer material thereon, a row of vacuities having equal dimensions regularly spaced along and existing in said strip, and dry, normally inactive adhesive carried solely by the portions of said strip between said vacuities, the dimensions of said vacuities along said row and perpendicular thereto being at least equal to the corresponding dimensions of said adhesive-carrying portions.

6. As a new article of manufacture, a windable strip of carbon paper having a row of vacuities therein and dry, normally inactive adhesive material carried solely by the portions of the strip lying between said vacuities, said adhesive material forming an interrupted band along said strip, the cumulative area of said vacuities within the extended boundaries of said band being at least equal to the cumulative area of said adhesive carrying portions.

7. The invention as claimed in claim 2 in which said apertures are circular perforations.

8. The invention as claimed in claim 2 in which said apertures are rectangular perforations.

9. The invention as claimed in claim 1 in which said vacuities are in the form of gaps alternating with projections which form the adhesive-carrying portions, both resulting from the fact that the edge of the web changes direction at spaced points.

10. A roll of transfer material comprising a

web having the structure set out in claim 1, wherein the web is wound upon itself to form a cylindrical roll having substantially wrinkle-free convolutions throughout.

11. A roll of carbon paper comprising a strip having the structure set out in claim 6 wherein the strip is wound upon itself to form a cylindrical roll having substantially wrinkle-free convolutions throughout.

12. A method for coating the opposite flat surfaces of a thin flexible strip having longitudinally spaced vacuities therethrough, comprising the steps of passing said strip between and in contact with the outer surfaces of two diametrically opposed rotating rollers, continuously applying coating material to one of said rotating rollers whereby said rotating roller deposits some coating material on one of the flat surfaces of said strip, said vacuities permitting another portion of said coating material to pass therethrough and to be applied in the pattern of the vacuities to the outer surface of the other of said rotating rollers, and depositing at least a part of said patterned coating material on the opposite side of said strip by contact of the strip with the latter roller as it rotates.

13. The method as claimed in claim 12 wherein the vacuities in the web are regularly sized and spaced and each has a dimension, measured along the web, represented by x, and wherein the web has regularly sized and spaced coating-carrying portions alternating with said vacuities, each of such portions having a dimension measured along the web represented by y, and wherein the other of said rotating rollers have a circumference substantially equivalent to the dimension given by substitution in the expression:

$$\text{Circumference}=\frac{(2a+1)(x+y)}{2}$$

where a is any convenient integer.

14. As a new article of manufacture, a transfer medium having a double faced adhesive application comprising a strip of fabric provided with a coating of transfer material and having at least one edge of undulating form so as to provide a series of alternating projections and gaps, and adhesive applications thereon on opposite surfaces of the projections thereof such that the adhesive-carrying portions of the projections lie in substantially a straight line which intersects each of the intervening gaps.

DOUGLAS A. NEWMAN.

References Cited in the file of this patent

UNITED STATES PATENTS

Number	Name	Date
1,183,005	Hageman, Jr.	May 16, 1916
1,232,135	Weinberg	July 3, 1917
1,285,903	Bazzoni	Nov. 26, 1918
1,619,081	McLaurin	Mar. 1, 1927
1,833,651	Low	Nov. 24, 1931
2,001,616	Klinger	May 14, 1935
2,152,012	Albion	Mar. 28, 1939
2,187,925	Wolfanger	Jan. 23, 1940
2,260,602	Brenn	Oct. 28, 1941
2,273,005	Beach	Feb. 17, 1942
2,342,969	Richardson et al.	Feb. 29, 1944
2,503,680	Newman	Apr. 11, 1950