United States Patent [19]

Macowski

[11] **Des. 250,343**

[45] ** **Nov. 21, 1978**

[54] **CARD FILE**

[75] Inventor: **William Macowski**, Caldwell, N.J.

[73] Assignee: **Ketcham & McDougal, Inc.**, Roseland, N.J.

[**] Term: **14 Years**

[21] Appl. No.: **677,813**

[22] Filed: **Apr. 16, 1976**

[51] **Int. Cl.** ..... **D19—02**

[52] **U.S. Cl.** **D19/76**

[58] **Field of Search** ..... D19/75–79, D19/20–21; D6/140; D87/1 B; 40/68.4, 68.6

[56] **References Cited**

U.S. PATENT DOCUMENTS

D. 200,370	2/1965	Sherman	D19/20
D. 204,217	3/1966	Sims	D19/90
3,253,871	5/1966	Karper	D19/76

Primary Examiner—Joel Stearman
Assistant Examiner—George P. Word
Attorney, Agent, or Firm—Harvey W. Mortimer

[57] **CLAIM**

The ornamental design for a card file, as shown and described.

DESCRIPTION

FIG. 1 is a perspective view of a card file showing my new design;
FIG. 2 is a top plan view;
FIG. 3 is a right side elevational view, the opposite side being a mirror image thereof;
FIG. 4 is a front elevational view;
FIG. 5 is a rear elevational view; and
FIG. 6 is a bottom plan view.

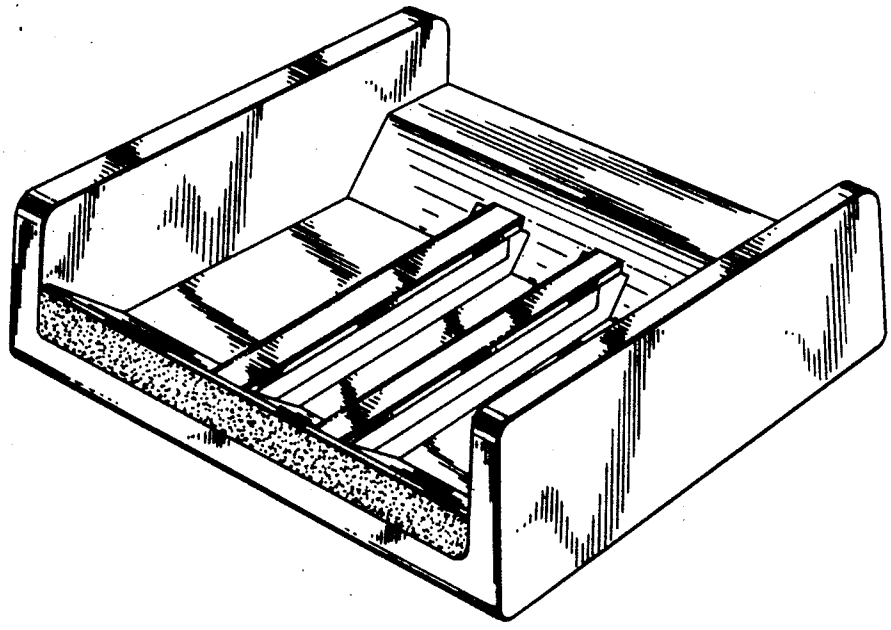

FIG.1

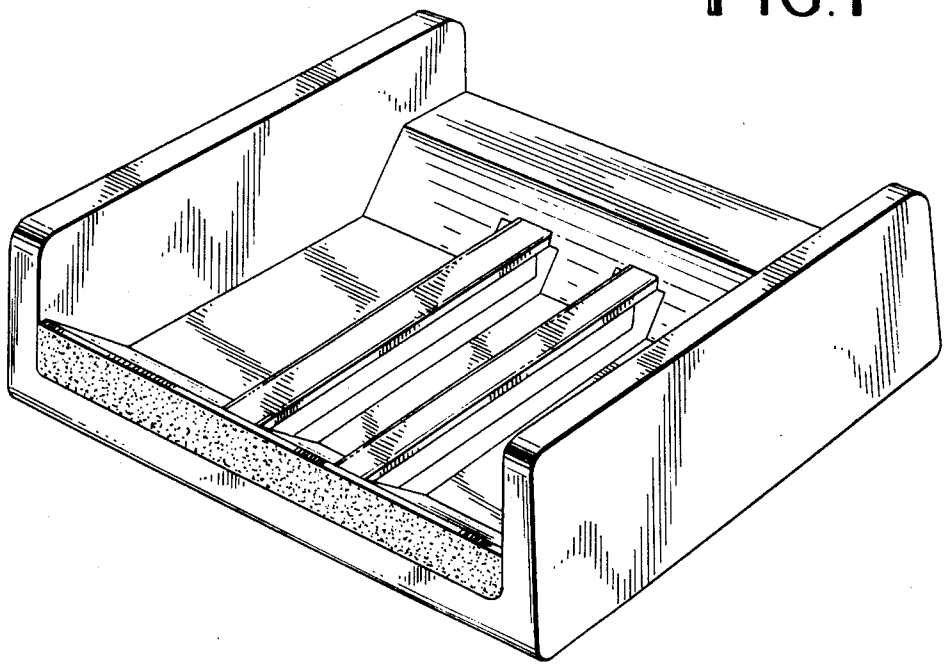

FIG.2

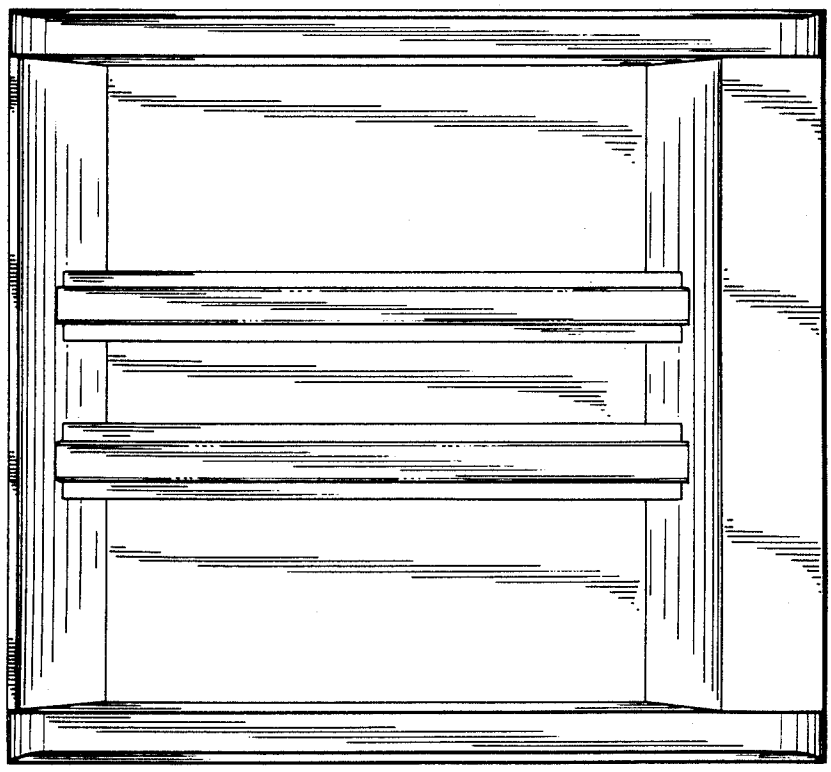

FIG. 3

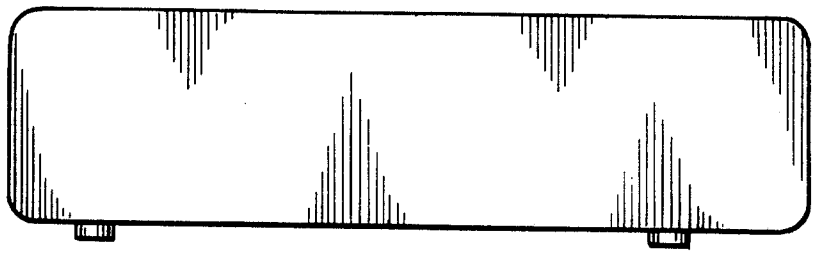

FIG. 4

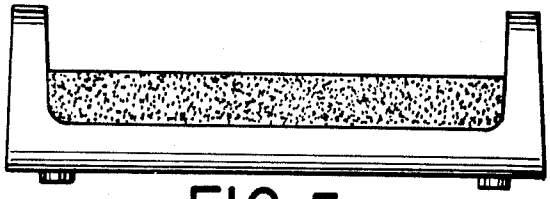

FIG. 5

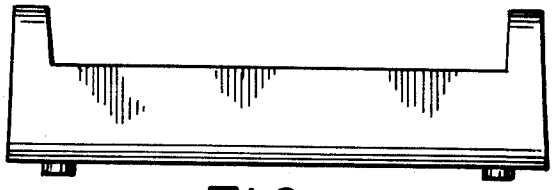

FIG. 6

