Dec. 18, 1934. B. S. CLARK ET AL 1,984,863

APPARATUS FOR MAKING CONCRETE OBJECTS

Filed Aug. 26, 1931 3 Sheets-Sheet 1

Fig. 1.

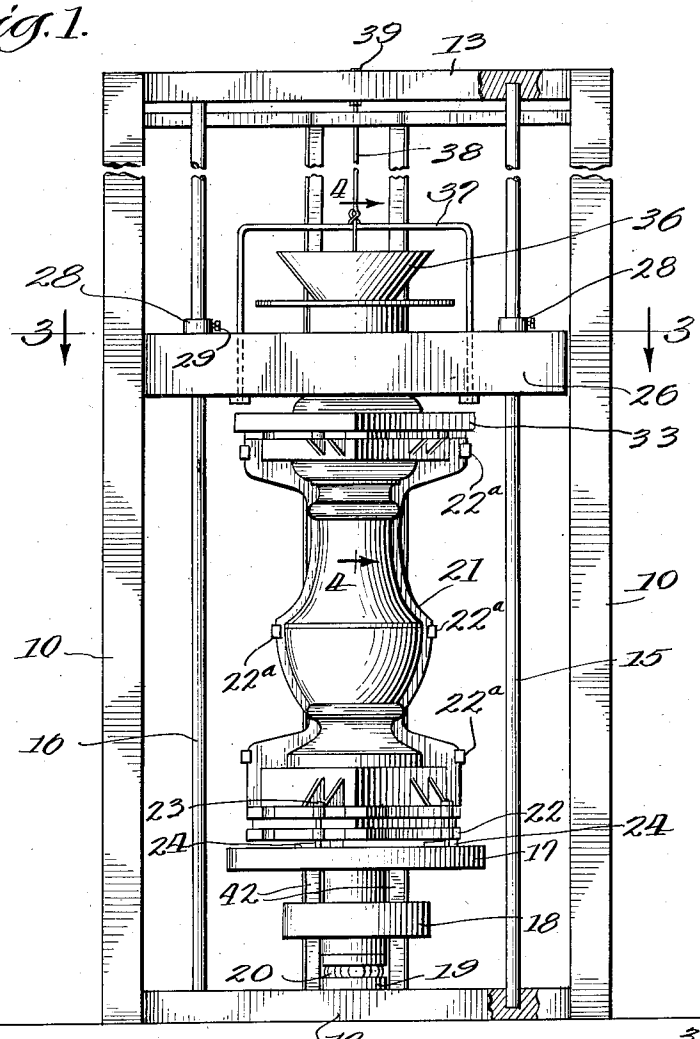

Fig. 3.

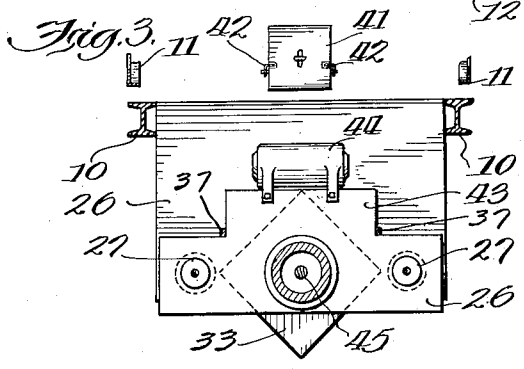

Fig. 4.

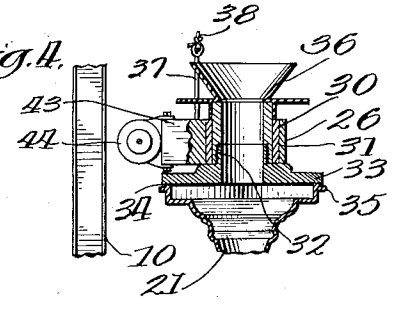

Inventors
Byron S. Clark
John N. Lowell

By Williams, Bradbury, McCaleb & Hinkle, Attys.

Dec. 18, 1934. B. S. CLARK ET AL 1,984,863

APPARATUS FOR MAKING CONCRETE OBJECTS

Filed Aug. 26, 1931 3 Sheets-Sheet 2

Fig. 2.

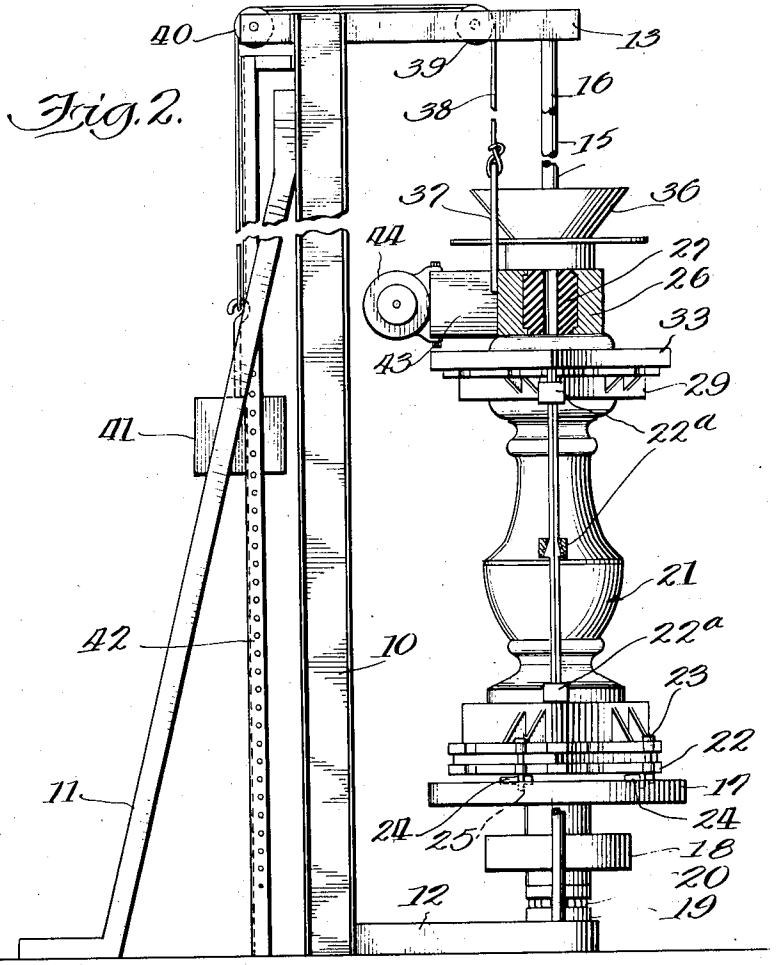

Fig. 5.

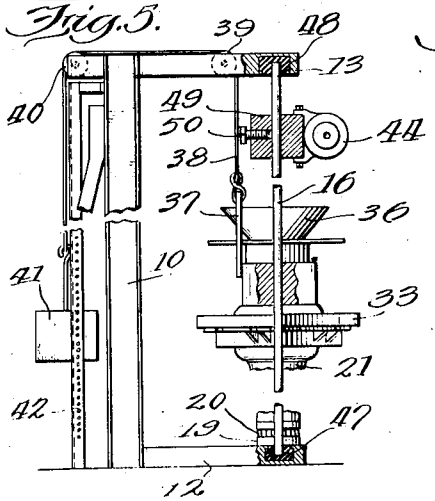

Fig. 6.

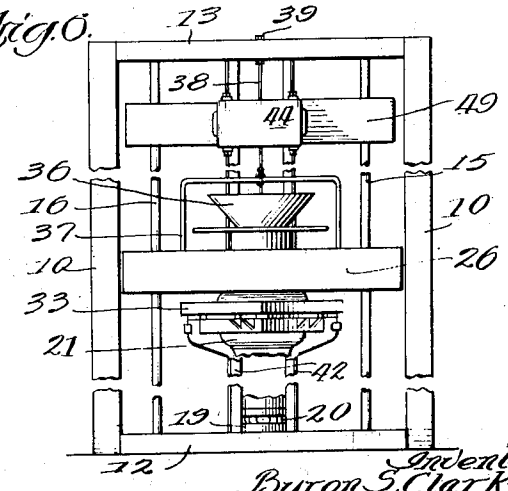

Inventors:
Byron S. Clark
John H. Lowell
By Williams, Bradbury, McCaleb & Hinkle. Attys.

Dec. 18, 1934. B. S. CLARK ET AL 1,984,863

APPARATUS FOR MAKING CONCRETE OBJECTS

Filed Aug. 26, 1931 3 Sheets-Sheet 3

Fig. 7.

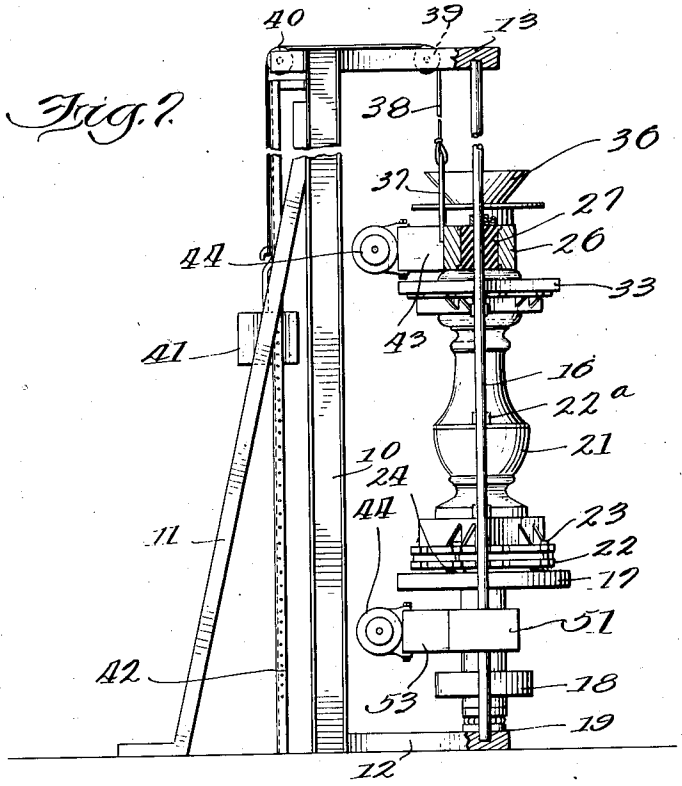

Fig. 8.

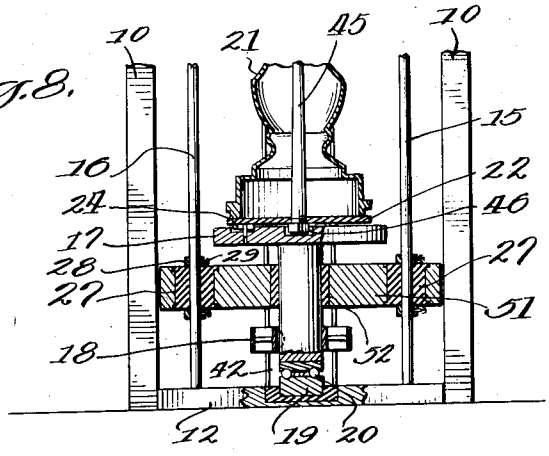

Inventors
Byron S. Clark
John H. Lowell
By Williams, Bradbury, McCaleb & Hinkle.
Attys.

Patented Dec. 18, 1934 1,984,863

UNITED STATES PATENT OFFICE

1,984,863

APPARATUS FOR MAKING CONCRETE OBJECTS

Byron S. Clark and John W. Lowell, Chicago, Ill., assignors, by mesne assignments, to Benedict Stone Products Company, Chicago, Ill., a corporation of Illinois

Application August 26, 1931, Serial No. 559,374

3 Claims. (Cl. 25—30)

Our invention relates to a method of and apparatus for making concrete objects, and has particular reference to a method whereby precast concrete objects are fashioned in a mold which is subjected to vibrations and also to a spinning of the mold.

The primary object of our method and apparatus is to form precast objects of concrete in such manner that the object is of a homogeneous mass throughout the entire structure and in which the outer surface is smooth and well formed, particularly if the object has an irregular surface or a surface in which a large number of rather sharp angles are provided.

In the art of making concrete it is now generally recognized that in order to secure a proper bonding of the aggregate which makes up the mass of concrete it is only necessary to have the outer surfaces of the aggregate covered with cement together with sufficient cement in plastic form to fill the voids between the aggregate which is used in making up the mass. In other words, the best cement products are now made from a harsh non-flowing mixture rather than from a mixture in which a large quantity of water and cement is used so as to properly fill all of the spaces between the coarser aggregate making up the mass.

We also recognize that it is old in the art to precast concrete objects wherein the packing of the concrete is performed by a spinning operation, but this process is not satisfactory for the reason that the coarser particles of aggregate are thrown to the outside of the mold by the centrifugal force developed by the spinning operation, with the result that the object is formed with a rough exterior and with the further result that a thin plastic mass containing the cement in suspension collects at the center of the mold. This necessitates the drawing off of this fluid and filling the center portion of the mass with other mixture, or if this is not done, the object has a hollow interior or an interior which is made up of a core of water and cement which is not as strong as a concrete made up of the larger particles of aggregate. The result is that objects formed by the spinning process alone are not homogeneous in character nor do they possess the uniform strength which is required in articles of this kind to withstand the uses to which they are subjected. As a result, the spinning operation alone is not satisfactory and in addition to the objections pointed out above, the concrete cannot be placed in the molds in such manner that the outer surface is entirely filled out, particularly if this surface is made up of a plurality of angular surfaces, so that at best the object which is formed is very rough and not properly filled out.

If the vibratory method alone, which is also old in the art, were applied to objects of this type, it is possible to secure a uniform homogeneous mass, but it is not possible to force the concrete into the angular portions of the mold in such manner that the object is completely filled out so as to form angular surfaces on the object which is precast.

To overcome the objections which are pointed out above we have devised the method of and apparatus for vibrating and spinning the mold while it is being filled with the concrete mixture, with the result that the object, when formed, is made up of a homogeneous mass of material and has its outer surface smooth and all angles of the mold are filled out completely so that objects of varying shape having sharp angles on their outer surfaces can be formed, which are pleasing in appearance and are also structurally strong and possess very high tensile strength. The concrete is preferably subjected to simultaneous vibration and spinning in order to save time and to secure the combined effects of these two operations. Some results may be accomplished, however, by alternate vibration and spinning. Furthermore, the vibration and spinning is preferably carried on as the form is filled as this saves time and serves to compact the concrete continuously as it is placed, but it is not necessary to carry on the vibration and spinning while filling the mold as the mold may be first filled and then subjected to vibration and spinning.

These and other objects of our invention will be more fully and better understood by reference to the accompanying sheets of drawings, and in which—

Figure 1 is a front elevational view of an apparatus for carrying our invention into practice;

Figure 2 is a side view, partially in elevation and partially in section, of the apparatus illustrated in Figure 1;

Figure 3 is a transverse sectional view on line 3—3 of Figure 1;

Figure 4 is a vertical sectional view on line 4—4 of Figure 1;

Figure 5 is a modified form of the apparatus showing a slightly different application of the vibrator;

Figure 6 is a front view of the device illustrated in Figure 5;

Figure 7 is a side view, partially in elevation

and partially in section, of the form of device in which a pair of vibrators is employed; and

Figure 8 is a vertical sectional view of the lower portion of the apparatus illustrated in Figure 7.

Referring now specifically to the drawings, and in which like reference characters refer to like parts throughout, a pair of vertical members 10, 10 is shown, having braces 11, 11 secured thereto in any approved manner and adapted to hold the members 10 and attached portions in proper position. A floor 12 is provided which forms a mounting for the mold, as hereinafter described, at its bottom, and which is attached to both the members 10 at one of its ends, and may rest upon the floor of the building in which the device is housed, if preferred, or braced in some substantial manner so that it forms adequate support for the mold.

An overhanging portion 13 of the frame is provided which is secured to the members 10 at their upper ends, and projects outward therefrom, with a pair of guide members 15 and 16 being mounted therein at their upper ends, these members extending vertically along the side of the mold and being mounted at their bottoms in the member 12.

Mounted upon the member 12 is a pedestal 17 having a belt wheel 18 mounted thereon and seated upon a thrust bearing block 19, with a ball race between the lower end of the pedestal 17 and the bearing block 19, within which ball bearings 20 are placed to minimize the friction resulting when the mold is rotated. Resting upon the pedestal 17 is a mold 21 adapted, in the form shown, to the making of balusters, and which comprises two sections having cooperating ribs along the meeting edges of the sections, with wedge shaped portions therealong over which clamping members 22^a, 22^a are fitted, thereby holding the sections together.

A bottom plate 22 is provided, with bolts 23, 23 being provided which extends through the bottom 22 and a flange in the sides of the mold sections with wedge members 24, 24 being provided which pass through the bolts 23 to hold the bolts in position. Recesses 25, 25 are formed in the pedestal 17 into which the ends of the bolts 23 and the wedges 24 extend to prevent rotation of the mold 21 on the pedestal 17.

Slidably mounted upon the rods 15 and 16 is a cross member 26 with resilient rubber bearing members 27, 27 mounted in the cross member 26, with collars 28, 28 having set screws 29, 29 therein for the purpose of holding the cross member 26 and its attached parts in position in the rods 15 and 16 if desired. Mounted in the cross member 26 is a bearing 30 with a second bearing 31 being provided which is reversed and internally threaded at its lower end, and into which an externally threaded portion 32 of a plate 33 extends. The plate 33 is square and rests upon the upper ends of the mold sections, which are also square at their tops, and has a flange 34 thereon which extends down into a cooperating ring 35 in the mold sections so that a tight joint is formed between the plate 33 and the top of the mold. A hopper 36 is secured to the upper end of the hollow bearing 31 through which the green concrete is passed into the mold 21.

A bail 37 is provided which is secured to the cross member 26 at its lower ends and which has a cable 38 secured thereto which passes over a pulley 39 mounted in the member 13, and a second pulley 40 mounted in the rear of the member 13, with a counterweight 41 being secured at the lower end thereof. This counterweight is sufficiently large to assist the workmen in elevating the cross member 26 and its attached parts when it is desired to remove the mold 21 from the machine. A pair of vertical guides 42, 42 are provided between which the counterweight operates, these guides having spaced openings therein within which pins may be placed to hold the counterweight in position and prevent its lifting the cross member 26 and attached parts off the mold during the filling and packing operation.

Secured to the rear of the cross member 26 is a block 43 upon which a vibrator 44 is mounted, this vibrator being preferably an electric motor with an unbalanced rotor therein, such as described in Patent No. 1,751,087, and when operated imparts vibrations to the mold 21, the resilient bearings 27, 27 allowing the mold 21 to be vibrated without imparting vibrations to the frame on which the mold is mounted. The guide rods 16 may also be resilient for the purpose of permitting free vibration of crosshead 26.

For the purpose of providing an opening through the cast baluster or other concrete object, a rod 45 is provided having a head 46 which extends through the bottom plate of the mold and into a recess in the top of the member 17. When the baluster is removed from the mold the rod is withdrawn, leaving a hole extending longitudinally through the cast baluster which provides means for securing a top plate or the like to the baluster, or in the case of light poles the openings form means for attaching the fixtures to the poles.

In Figures 5 and 6 a modified form of device is illustrated and described, differing only in the forms heretofore described with respect to the attachment of the vibrators. In this form of device the rods 15 and 16 are mounted in the resilient socket members 47 and 48 respectively, which are positioned in the members 12 and 13. A cross member 49 is provided through which the rods 15 and 16 extend, with set screws 50 being placed therein by means of which the cross member 49 is held in position on the rods 15 and 16. The vibrator 44 is mounted in any approved manner on the front of the cross member 49.

In Figures 7 and 8 is illustrated still another modified form of device which is exactly like the forms illustrated in Figures 1 to 4 inclusive, with the exception that the pedestal base is lengthened slightly and a cross member 51 mounted upon the rods 15 and 16 with a bearing member 52 mounted therein which encircles the base of the pedestal 17, with the same form of resilient bearing members 27, 27 as are provided in the cross member 26. A block 53 is provided upon which the vibrator 44 is mounted, this form of device being particularly adapted for casting of long objects such as telegraph poles and the like, but may be used in the casting of balusters and shorter objects, such as illustrated, if desired. It will be understood that in this form the vibrator being attached to the cross member 51 with a metal to metal contact between the bearing 52 and the base of the pedestal 17, the vibrations are imparted to the mold 21 without vibrating the rods and supporting mechanism for the mold. This is true also with respect to the device illustrated in Figures 1 to 4 inclusive, where the vibrations are imparted to the bearing above the mold which provides a metal to metal contact with the vibra-

tions being partially absorbed in the resilient bearing members 27.

In the form of device illustrated in Figures 5 and 6 the vibrations are imparted by the bearing members 47 and 48 on the ends of the rods 15 and 16, the vibrations in this form being imparted to the mold through the rods 15 and 16. In the form of device illustrated in Figures 5 and 6, the resilient bearing members 27 are omitted from the cross member 26 so that the vibrations which are imparted to the rods 15 and 16 are passed through these rods in the cross member 26 to the mold 21.

In operation when it is desired to cast a concrete object the mold, such as 21, is placed in position in the frame and the concrete is placed into the mold through the hopper 36, and while the mold is being filled it is also being spun by means of the belt attached to the belt wheel 18, and at the same time the mold is simultaneously vibrated by the vibrator 44, which is shown in various positions in the apparatus illustrated in the drawings. We prefer to spin the mold at a rate of speed of approximately 400 revolutions per minute with vibrations imparted to the mold at the rate of somewhere around 3000 to 3500 per minute. In this manner, the dry harsh concrete, which is used, is packed and the mold completely filled with the concrete so that the outer side presents a smooth, even appearance and the angles are completely filled out with smooth concrete, so that the completed concrete object is formed ready to be used in service.

After the mold has been completely filled and the spinning and vibrating operation continued for a short time after the filling operation, the mold is removed from the machine, the top plate 33 removed, and the concrete allowed to dry in the mold 21, or the concrete may be set through the use of artificial heat by being passed through an oven, when the sections of mold are removed and placed together ready for another operation.

While I have described more or less precisely the details of construction, I do not wish to be understood as limiting myself thereto, as I contemplate changes in form and the proportion of parts and the substitution of equivalents as circumstances may suggest or render expedient without departing from the spirit or scope of my invention.

We claim:

1. An apparatus for treating concrete articles comprising a supporting frame, a rotatable table for supporting a form carried by said frame, said table being resiliently mounted with respect to said frame, a form carried by said table and mounted to rotate with said table, a second table inverted with respect to the first table engaging the top of said form, said second table being rotatably and resiliently mounted with respect to said frame, means for rotating said tables and form to subject concrete in said form to centrifugal force, means for subjecting said form to high frequency vibration, comprising a cross head and bearing for rotatably supporting said inverted table, means for resiliently supporting said cross head on said frame, and a motor having an eccentric weight carried by the motor shaft mounted on said cross head.

2. An apparatus for treating concrete articles comprising a supporting frame, a rotatable table for supporting a form carried by said frame, said table being resiliently mounted with respect to said frame, a form carried by said table and mounted to rotate with said table, a second table inverted with respect to the first table engaging the top of said form, said second table being rotatably and resiliently mounted with respect to said frame, means for rotating said tables and form to subject concrete in said form to centrifugal force, means for subjecting said form to high frequency vibration, comprising a cross head and bearing for rotatably supporting said inverted table, means for resiliently supporting said cross head on said frame, and a motor having an eccentric weight carried by the motor shaft mounted on said cross head, said inverted table having an aperture and a hollow spindle in said bearing for the passage of concrete into the upper end of said form.

3. In an apparatus for treating concrete, the combination of a frame comprising a lower supporting member, a standard, and an upper supporting member carried by said standard, said lower and upper supporting members being formed with sockets for receiving resilient rubber cushions, a pair of resilient rubber cushions in said sockets, a pair of rods located in said cushions and extending from said upper supporting members to said lower supporting members, a cross arm carried by said rods, said cross arm having a motor with an eccentric weight attached thereto, a rotary table rotatably mounted on said lower supporting member and having an anti-friction thrust bearing, said cross arm having a bearing for receiving a second rotary table member located in opposed relation to said table, a concrete form received between said table and table member and secured to rotate therewith, and means for securing said form to said table and table member whereby said form may be simultaneously rotated on a vertical axis and subjected to high frequency vibration to mold the concrete members of substantially increased density and substantially improved external surface.

BYRON S. CLARK.
JOHN W. LOWELL.