Feb. 18, 1936. T. PESCI 2,031,063

CONTINUOUS MACHINE FOR PRINTING FLOOR AND WALL COVERINGS

Filed Oct. 17, 1933 3 Sheets-Sheet 1

FIG. 1.

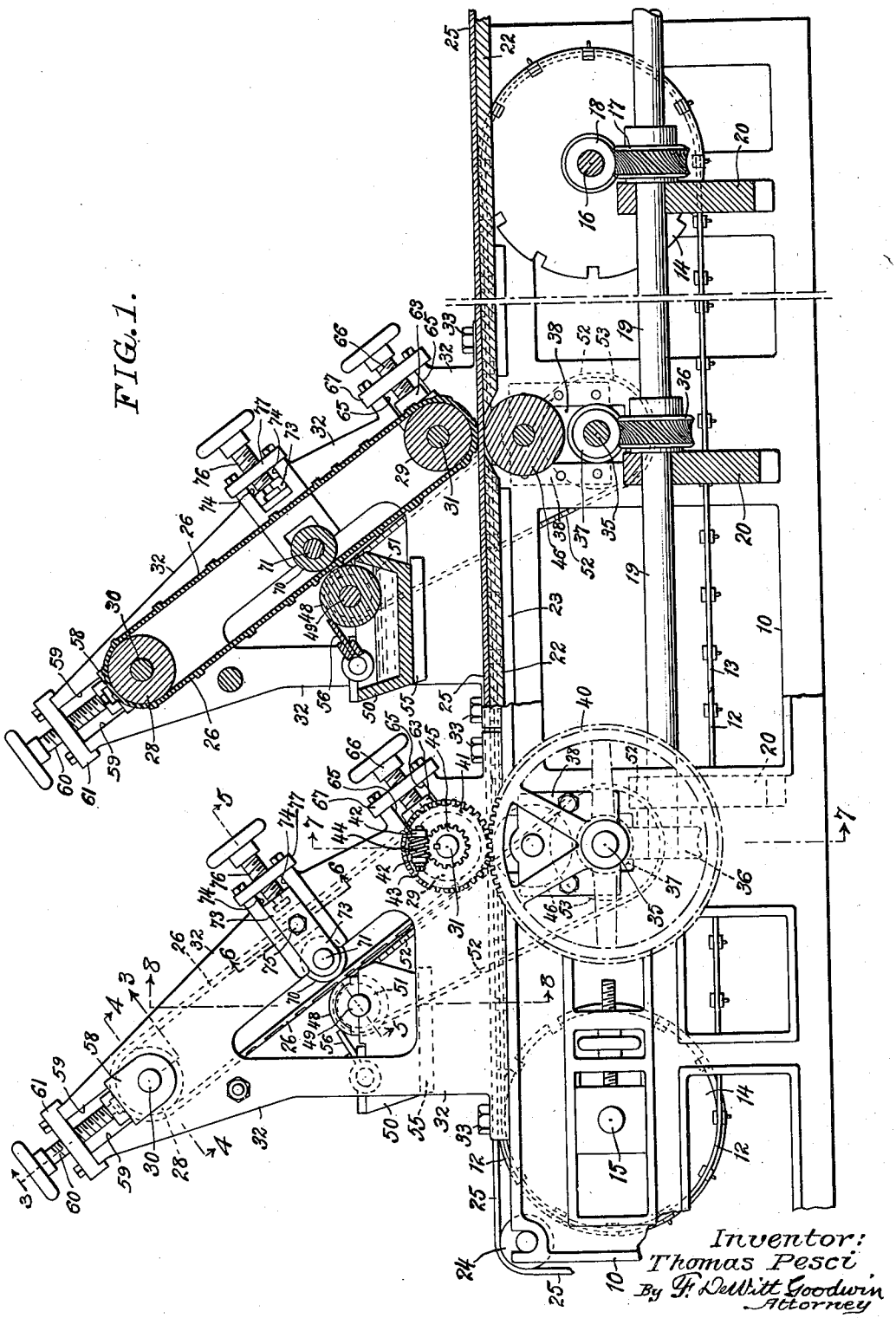

Inventor:
Thomas Pesci
By F. DeWitt Goodwin
Attorney

Feb. 18, 1936. T. PESCI 2,031,063

CONTINUOUS MACHINE FOR PRINTING FLOOR AND WALL COVERINGS

Filed Oct. 17, 1933 3 Sheets-Sheet 2

FIG. 2.

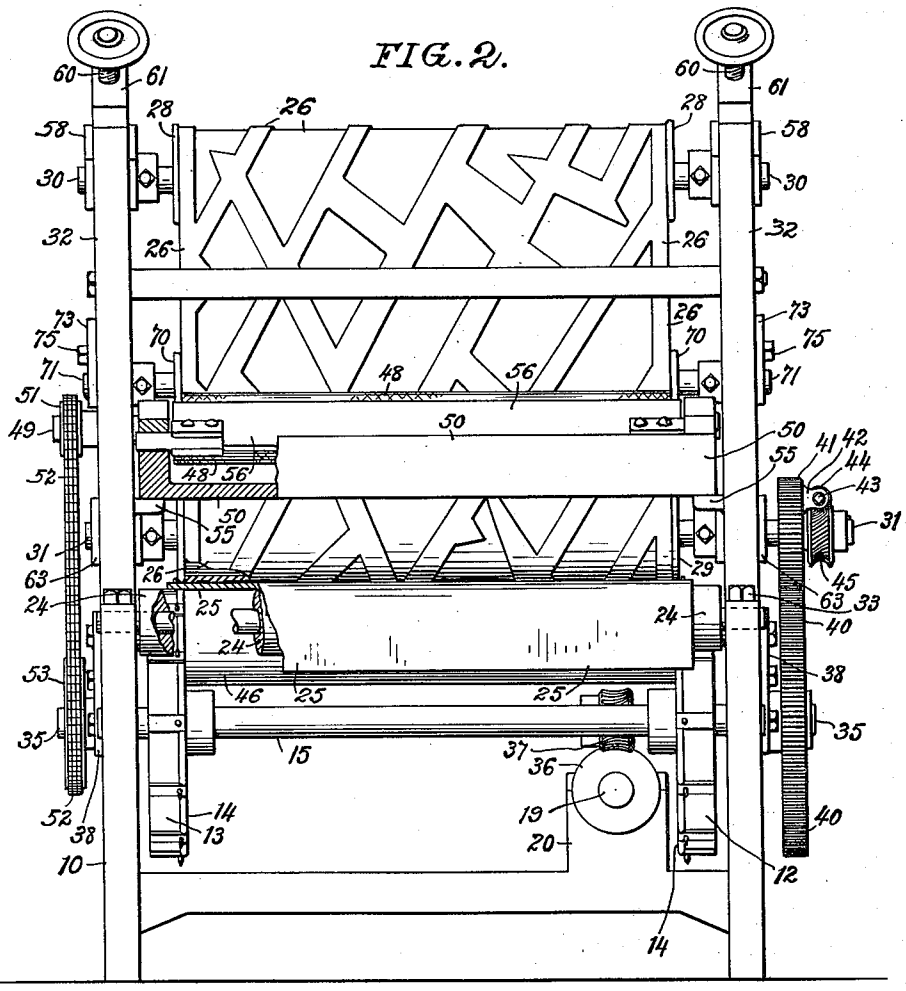

FIG. 3.

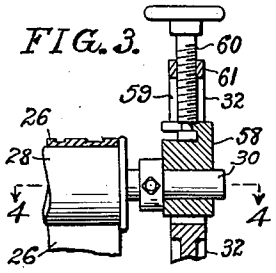

FIG. 4.

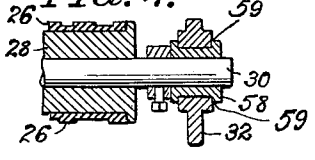

FIG. 5.

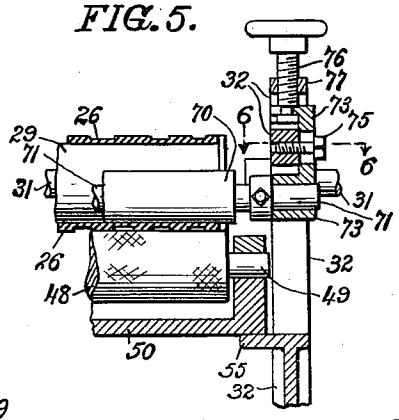

FIG. 6.

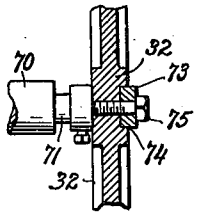

Inventor:
Thomas Pesci
By H. DeWitt Goodwin
Attorney

Feb. 18, 1936. T. PESCI 2,031,063

CONTINUOUS MACHINE FOR PRINTING FLOOR AND WALL COVERINGS

Filed Oct. 17, 1933 3 Sheets-Sheet 3

FIG. 7.

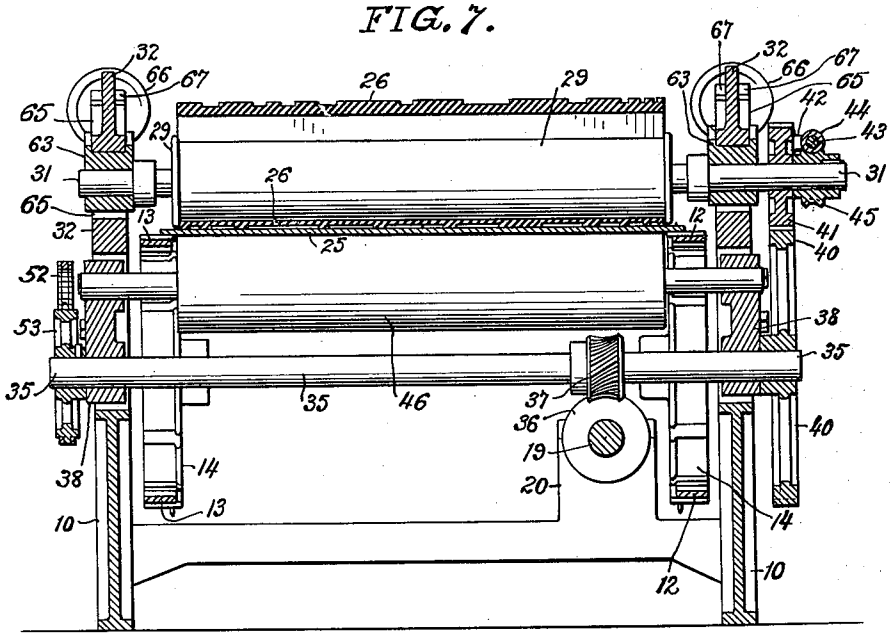

FIG. 8.

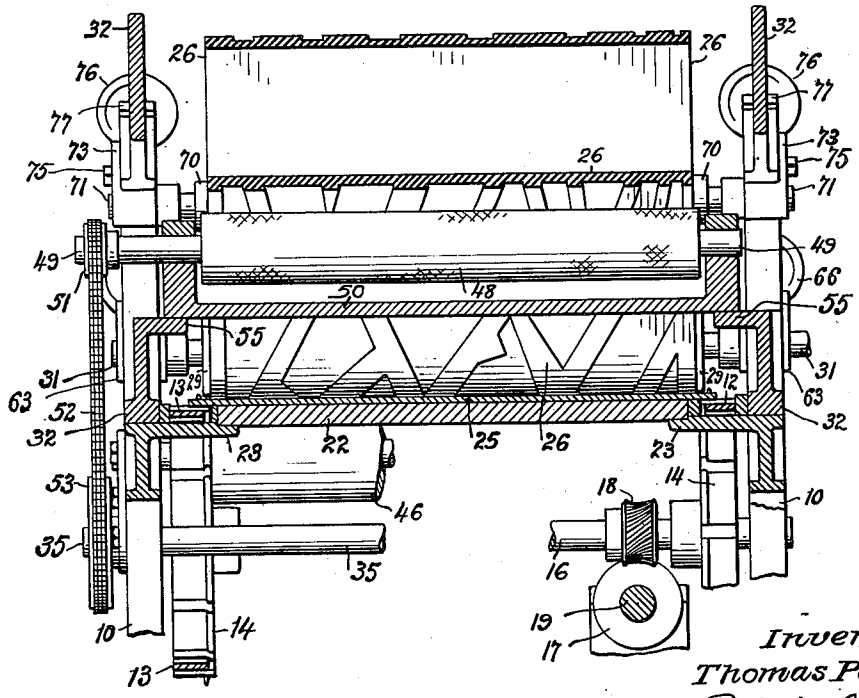

Inventor:
Thomas Pesci
By F. DeWitt Goodwin
Attorney

Patented Feb. 18, 1936 2,031,063

UNITED STATES PATENT OFFICE

2,031,063

CONTINUOUS MACHINE FOR PRINTING FLOOR AND WALL COVERINGS

Thomas Pesci, Raritan, N. J.

Application October 17, 1933, Serial No. 693,903

3 Claims. (Cl. 101—181)

My invention relates to improvements in a machine for printing material, or goods, such as linoleum, oil-cloth and the like.

The object of my invention is to provide a machine for continuously printing goods and thereby increasing the speed of production.

A further object is to employ an endless printing member, or apron, on which the design to be printed is formed.

A further object is to provide an endless printing member of sufficient size to carry a design which may be co-extensive with the length of the goods, when the latter is cut into lengths to form rugs.

A further object is to provide a machine having parallel rollers embraced by the endless printing member.

A further object is to provide means for removably mounting the rollers upon the machine, whereby printing members of various lengths may be readily installed.

A further object is to provide means for adjustably mounting the rollers upon the machine, whereby the tension upon the printing member may be varied.

A further object is to provide adjustable means for mounting one of the rollers upon the machine, whereby the pressure upon the goods may be varied by adjusting the printing member relatively to the goods.

A further object is to provide novel means for applying ink, or paint, to the printing member, and means for contacting the printing member with the liquid applying means.

These together with various other novel features of construction and arrangement of the parts, which will be more fully hereinafter described and claimed, constitute my invention.

Referring to the accompanying drawings,—Fig. 1 is a side elevation, partly in section, of a printing machine embodying my invention. Fig. 2 is an end elevation of Fig. 1, partly in section. Figs. 3, 4, 5, and 6 are partial sectional views, on lines 3—3, 4—4, 5—5, and 6—6, respectively, Fig. 1. Figs. 7 and 8 are transverse vertical sectional views on lines 7—7 and 8—8, respectively, Fig. 1.

In the drawings, in which like reference characters refer to like parts, 10 represents the frame of a printing machine. Endless conveyor belts 12 and 13 are mounted on wheels 14, secured on shafts 15 and 16, rotatably mounted in the frame 10. The shaft 16 is rotated through gears 17 and 18 by the main shaft 19, mounted in bearings 20, secured upon the frame 10. The belts 12 and 13 are provided with cleats and pins for engaging the goods, in a manner well known in the art.

A table 22, arranged in sections, is mounted on lugs 23 formed upon the frame 10. The table is provided for supporting the material or goods 25, which is to be printed, as the material is continuously advanced over a roller 24, loosely mounted on the frame 10, and over the table 22 by the belts 12 and 13.

My novel printing member 26, comprises an endless apron, belt or blanket, formed of flexible material, preferably rubber, having raised printing surfaces formed thereon and arranged to print the desired design upon the goods, or material 25. The member 26 may be reinforced with canvas, or similar flexible material, which will permit the member 26 to be mounted upon upper and lower rollers 28 and 29, secured on shafts 30 and 31. Said shafts are adjustably mounted in the frame brackets 32, which latter are secured to the frame 10 by bolts 33.

The printing member 26 is driven at a speed equal to the speed of the goods 25, by mechanism comprising a shaft 35 which is rotated by the main shaft 19, through gears 36 and 37. The shaft 35 is mounted in bearings 38, adjustably secured in the frame 10, as shown in Figs. 1 and 7, which arrangement permits the shaft 35 to be adjusted vertically in the frame 10. A gear wheel 40 is secured on the shaft 35 and meshes with a gear wheel 41 loosely mounted on the shaft 31.

The gear wheel 41 is provided upon its side face with bearings 42, in which is rotatably mounted a shaft 43, having a worm 44 secured thereon, which worm 44 meshes with a worm wheel 45, secured on the shaft 31, provided for driving the printing member 26. By rotating the shaft 43, the shaft 31 may be rotated, and the apron 26 may be adjusted relatively to the goods 25, without moving the gear wheels 40 and 41. By this arrangement the design upon the apron 26 may be adjusted to properly register with the design upon the goods 25.

A roller 46 is loosely mounted in said bearings 38 and is arranged to support the goods 25 immediately below the lower roller 29, which carries the lower portion of the apron 26. The roller 46 holds the goods in contact with the printing surface of the apron.

A printing liquid in the form of ink, or paint, is applied to the design formed by the printing surface of the member 26, by means of a roller 48, secured on a shaft 49, mounted in end bearings formed upon a liquid receptacle 50. The shaft 49 has a wheel 51 secured thereon, which wheel is rotated by a sprocket chain 52, driven by a wheel 53 secured on the driven shaft 35.

The receptacle 50 is supported upon lugs 55, formed upon the frame brackets 32. The usual scraper or doctor 56, is provided for engaging the roller 48.

The printing member 26 is adjustably and removably mounted upon the frame brackets 32,

in the following manner:—The upper shaft **30** is loosely mounted in bearings **58**, slidably mounted in guides **59**, forming part of the frame brackets **32**, as shown in Figs. 1, 3, and 4. The bearings **58** are adjusted by the screws **60** which are in threaded engagement with the head **61** detachably secured to the frame **32**. By this arrangement the opposite ends of the shaft **30** may be independently adjusted for varying the tension upon opposite portions of the apron **26**, and the bearings **58** may be readily removed.

The lower shaft **31** is mounted in bearings **63**, shown in Figs. 1 and 7. The bearings **63** are slidably mounted in guides **65**, formed in the frame brackets **32**. The bearings **63** are adjustable by screws **66**, mounted in the detachable heads **67**.

The guides **65** are positioned at right angles to the upper guides **59** and permit the bearing **63** and the lower portion of the apron to be moved to and from the surface of the goods **25** for varying the pressure between the printing surface of the apron and the goods. Only a slight movement of the bearings **63** is required for this adjustment, which movement is not sufficient to cause the teeth of the gears **40** and **41** to become disengaged.

The printing surface of the apron **26** is held in contact with the ink roller **48** by a pressure roller **70**, mounted upon a shaft **71**, which in turn is loosely mounted in bearings **73**, as shown in Figs. 1, 5, and 6. Said bearings are slidably secured in grooves **74**, formed in the outer faces of the frame brackets **32**, by the heads of the bolts **75**. Adjusting screws **76** are mounted in the removable heads **77**. Said screws are provided for moving the bearings **73**, for varying the pressure applied by the roller **70**, for holding the apron **26** against the ink roller **48**.

The printing members or aprons **26**, frame brackets **32**, and ink rollers **48** are repeated throughout the length of the machine. There may be ten or twelve of such printing units, one for each color of ink, or paint, required to complete the desired design, which is to be printed upon the goods, or material, **25**.

By rotating the shafts **43** of the novel adjusting devices, the separate printing members **26** may be brought into register with the design upon the goods.

The aprons **26** are about the same in width as the goods **25**, which latter may vary from six to nine feet in width. The aprons are of sufficient length to permit a single pattern, or design, to be equal in extent to the length of the rugs, which may vary from six to twelve feet.

The novel form of bearings employed throughout the machine permit the aprons **26** to be readily removed from the machine and aprons or printing members of different sizes substituted.

The operation of my improved machine is as follows: The goods, or material **25** is continuously fed through the machine by the conveyor belts **12** and **13**. The printing members **26** are driven by the lower rollers **29**. The rate of speed of the printing members and the rate of speed of the conveyor belts are synchronized so that the various colors will register in their proper places upon the goods and will not overlap each other. The various novel adjustments permit extremely well defined outlines of color and design to be produced.

The continuous operation of the goods and of the printing members make possible an increase in production. The cost of production and operation are reduced. Quick changes in designs are made possible, and the extent of the design is only limited by the length of the printing member, which may be extended as desired.

I claim:—

1. In a printing machine the combination of a frame, endless conveyor belts movably mounted upon the frame for moving goods to be printed, an endless one piece printing member, rollers arranged in parallel relation to each other and embraced by said member, bearings in which said rollers are mounted, said bearings arranged upon the frame for mounting said member in an oblique position relatively to the goods, means adjustably mounting said bearings upon the frame, and arranged for varying the distance between the rollers, a guide upon the frame positioned obliquely to the conveyor belts in which guide the bearings in which one of the rollers is mounted are movable in a line at right angles to the length of said member and arranged for varying the position of the last mentioned roller relatively to the goods, a supporting roller upon the frame and arranged for supporting the goods adjacent to said member, an ink receptacle mounted upon the frame, an ink roller positioned to receive ink from said receptacle and arranged for applying ink to said member, a roller located within said member and arranged for pressing said member against the ink roller, bearings in which the last mentioned roller is mounted, and means adjustably mounting said last mentioned bearings upon the frame.

2. In a printing machine the combination of a frame, endless conveyor belts movably mounted upon the frame for moving goods to be printed, an endless printing member, upper and lower rollers upon which said member is mounted, the lower one of said rollers positioned adjacent to the goods with said member in printing engagement with the goods, bearings on which said rollers are mounted, said bearings arranged upon the frame for mounting said member in an oblique position relatively to the goods, guides upon the frame and occupied by the bearings on which the lower roller is mounted, said guides positioned obliquely to the surface of the goods and at right angles to the length of said member and arranged to permit the position of the lower roller to be adjusted obliquely relatively to the goods for varying the pressure of said member relatively to the goods.

3. In a printing machine the combination of a frame, endless conveyor belts movably mounted upon the frame for moving goods to be printed, an endless printing member, upper and lower rollers upon which said member is mounted, the lower one of said rollers positioned adjacent to the goods and in printing engagement with the latter, bearings on which said rollers are mounted, said bearings arranged upon the frame for mounting said member in an oblique position relatively to the surface of the goods, means upon the frame and arranged for adjustably mounting the bearings for the upper roller in a line parallel with the length of said member for varying the distance between the rollers, guides upon the frame and upon which the bearings for the lower roller are adjustably mounted, said guides positioned obliquely to the surface of the goods and at right angles to the length of said member and arranged to permit the lower roller to be adjusted obliquely to the goods for varying the printing pressure of said member upon the goods.

THOMAS PESCI.