Feb. 6, 1940. E. L. ROCKWOOD 2,188,924

METHOD AND APPARATUS FOR DRYING HAIR

Filed Sept. 30, 1936 2 Sheets-Sheet 1

FIG. 1.

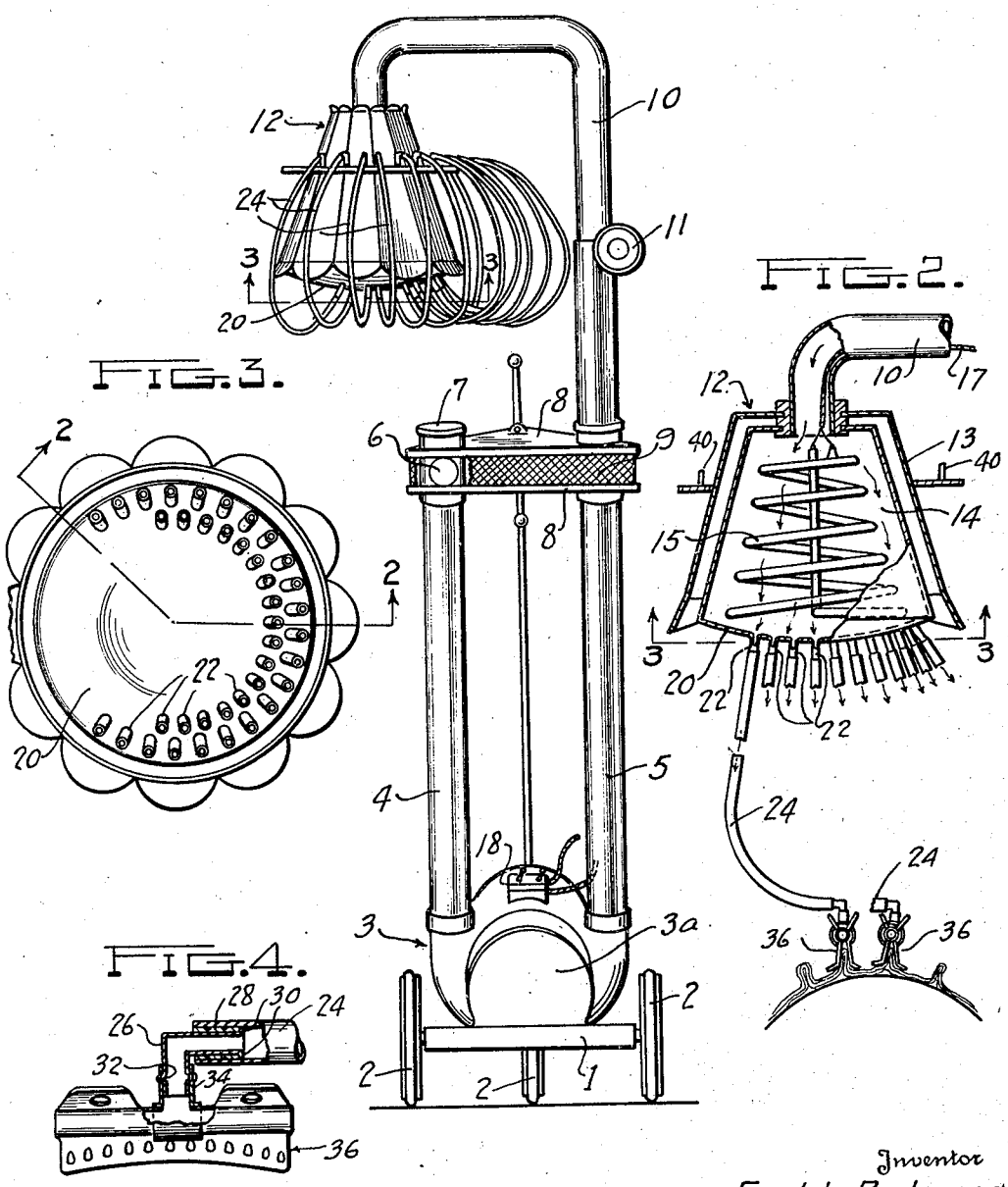

Inventor
Earl L. Rockwood

Owen & Owen

By

Attorneys

Feb. 6, 1940. E. L. ROCKWOOD 2,188,924

METHOD AND APPARATUS FOR DRYING HAIR

Filed Sept. 30, 1936 2 Sheets-Sheet 2

FIG. 5.

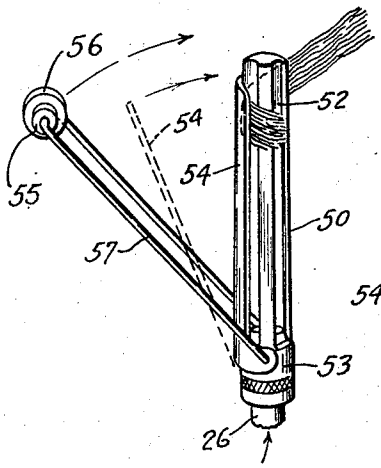

FIG. 7.

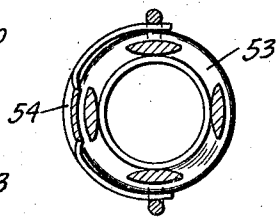

FIG. 6.

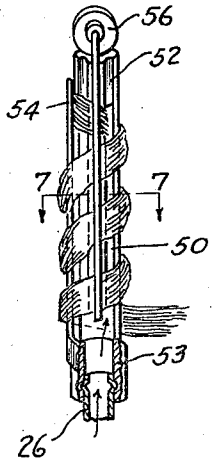

FIG. 8

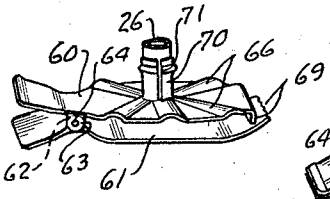

FIG. 9.

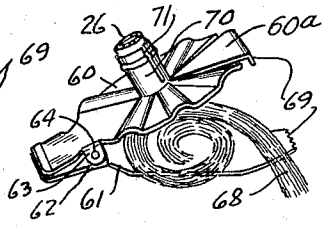

FIG. 10.

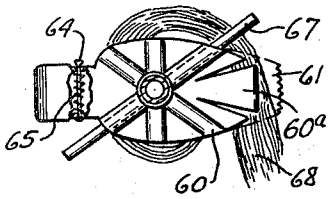

FIG. 11

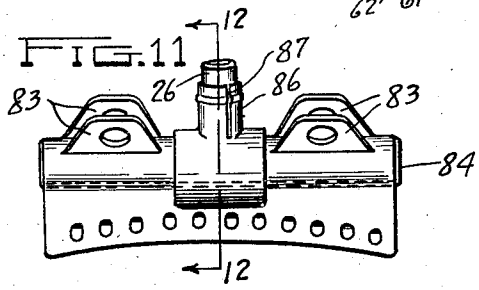

FIG. 12

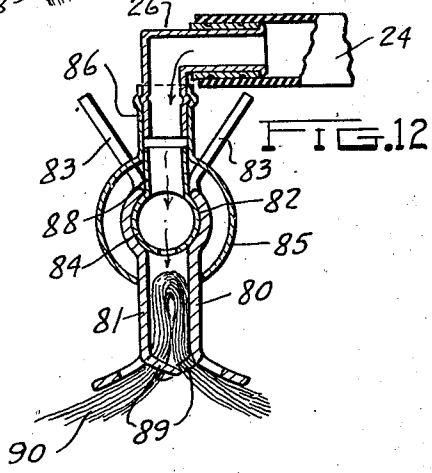

FIG. 13.

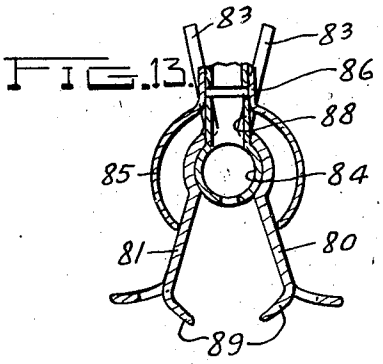

Inventor
Earl L. Rockwood

By Owen & Owen

Attorneys

Patented Feb. 6, 1940

2,188,924

UNITED STATES PATENT OFFICE

2,188,924

METHOD AND APPARATUS FOR DRYING HAIR

Earl L. Rockwood, Toledo, Ohio, assignor to The De Vilbiss Company, Toledo, Ohio, a corporation of Ohio

Application September 30, 1936, Serial No. 103,300

6 Claims. (Cl. 132—9)

This invention relates to hair drying and waving, and is more particularly directed to a method and machine in which heated air is used to perform the drying operation.

The primary object of the invention is the provision of a hair drying apparatus which operates on divided masses of hair and completely dries the hair in a very short period of time by passing air through such masses.

Another object of the invention is the provision of hair drying apparatus in which attachments for holding hair in configuration of curls and waves are utilized and constructed to bring the drying air in close association with the hair.

Another object of the invention is the provision of a novel method for drying divided masses of hair by forcing a drying medium through the masses.

Another object of the invention is the provision of novel means to utilize heated air in the operation of drying hair in such a manner as to eliminate the objectionable noise and vibration usually accompanying the use of a hair dryer.

Another object of the invention is the provision of a hair drying apparatus in which the subject on which the device is used is free to move about to a limited extent during the drying operation.

Another object of the invention is the provision of hair drying apparatus which utilizes air warmed only slightly but which is still effective in rapidly drying hair.

Another object of the invention is the provision of hair drying apparatus which will dry hair rapidly without disturbing the arrangement of the hair.

Other objects and advantages of the invention will become apparent as the description proceeds, reference being had to the accompanying drawings, in which—

Figure 1 is a somewhat diagrammatic elevational view of a device constructed in accordance with the present invention; Fig. 2 is a fragmentary vertical sectional view of the heating and distributing head taken on line 2—2 of Fig. 3; Fig. 3 is a bottom plan view of the heating and distributing head taken on line 3—3 of Fig. 1; Fig. 4 is a detail assembly view of the end of a conduit for distributing heated air showing an attachment which may be used to impart a predetermined configuration to a subdivided mass of hair; Fig. 5 is a somewhat diagrammatic perspective view of one form of hair forming device, with the parts in open position; Fig. 6 is a similar view, with parts broken away, and the holding means in closed position; Fig. 7 is a section on line 7—7 of Fig. 6; Fig. 8 is a perspective view of another form of holding device; Fig. 9 is a perspective view of the holding device shown in Fig. 8, with the parts in open position to receive a mass of hair to be formed; Fig. 10 is a top plan view of the same device, with a part broken away, and the holding means in closed position over a mass of hair; Fig. 11 is a perspective view of another form of hair holding device; Fig. 12 is an enlarged section on line 12—12 of Fig. 11, and Fig. 13 is a view similar to Fig. 12, with the parts in open position.

Referring to the drawings, the machine consists of a base or standard 1 mounted on a plurality of wheels 2 so that it may be readily moved about. A conventional electric blower and motor assembly 3 is mounted on the base 1. The blower, designated by 3a, is provided with an inlet conduit 4 and an exhaust conduit 5 extending vertically therefrom. The inlet conduit 4 terminates in an inlet port 6 controlled by a rotatable valve 7 which is adapted to be manually moved to close off or open the port.

The inlet port 6 is in turn disposed within a housing formed by upper and lower plates 8 having a grill or mesh work 9 spanning the space between the plates so that the sides of the housing are open to the atmosphere.

The upper end of the exhaust conduit 5 extends above the plates 8 and is provided with a rotatable and adjustable end piece 10 which is fixed in any desired position by a clamping screw 11. The portion 10 of the exhaust conduit is of inverted U form and terminates in a heating and distributing head generally designated by 12.

As shown in Fig. 2, the heating and distributing head is formed of a shell 13 forming an air heating chamber 14 in which is disposed an electric heating element 15 of any suitable type. Electrical connection is made to the heating element 15 by a lead 17 which extends back through the exhaust conduit to a point near its lower end where it emerges to enter a switch box 18 on top of the housing of the motor 3. Thus, current is supplied to the heating element 15 at will, and if desired may be thermostatically controlled by any conventional apparatus so as to maintain a selected temperature of the exhaust air.

The bottom of the air heating chamber 14 is formed by a dished plate 20 having a plurality of nipples 22 fixed in its lower surface and arranged, as shown in Fig. 3, in two substantially concentric particircular rows. Each nipple 22 is adapted to receive a flexible air distributing tube or conduit 24 through which heated air is passed to perform

the drying operation. An attaching elbow 26 is mounted in the end of each of the air distributing tubes 24. The elbow 26 cooperates with a short metallic tubular member 28 in such a manner that it is free to rotate with respect to the member 28 and the tube 24, but is held against outward axial movements of the tube by small ears 30 struck out from the inner extremity of the elbow 26. The other arm of the elbow 26 is formed intermediate its ends with a bead 32 extending therearound so that a split resilient tubular part 34 of a forming unit 36 may be snapped over the downwardly extending arm of the elbow 26. In this manner, the forming unit 36 is free to rotate about the elbow 26 by reason of its cooperation with the bead 32.

The forming unit 36 may be considered as illustrative and will be used to designate generally any of the hair forming devices hereinafter described. It should be understood that those units described later in the specification and shown in Figs. 5 to 11, inclusive, are all interchangeable with the forming device 36, depending on the type of wave or curl to be imparted to the subject's hair.

When the device is not in use, the forming units 36 may be slipped from engagement with the end of the elbow 26, which latter may then be made to engage a series of hollow projecting pins 40 mounted on a suitable ring around the housing 13. In this manner, the tubes 24 are all neatly gathered in a definite position and are kept from dangling beneath the head 12. The hollow projecting pins 40 are made hollow so that air may pass freely therethrough during a warming up operation of the machine. It will be seen that if the pins 40 were solid, air pressure in the tubes 24 would cause them to be lifted from the pins and propelled away from the head.

As shown in Figs. 5 to 13, inclusive, various types of hair forming devices may be used with the present invention. Each shows the common characteristic that it is adapted to clamp or grip firmly a divided mass of hair and hold it in a desired configuration while air from one of the individual conduits 24 is forced into intimate contact with the divided mass of hair to be dried.

The type shown in Figs. 5 to 7, inclusive, is a curling device including a body 50 formed of a plurality of parallel bars fixed to the periphery of cylindrical end pieces 52 and 53. The end piece 53 is hollow and is adapted to be snapped over the elbow end connection 26 of one of any individual air conduits 24. A holding bar 54 is pivoted to the end piece 53 and in use is placed over the end of the hair to be curled which is then wrapped over it. A snap latch 55 is also pivoted to the end piece 53 and has an engaging roller 56 adapted to engage the end piece 52. A tension is placed on the roller when it is in latching position by side rods 57 so that the latch will stay in place over the body of hair.

The species of holding device shown in Figs. 8, 9 and 10 is that adapted to form flat curls and includes hingedly connected opposed upper and lower body plates 60 and 61. The plates are connected by means of ears 62 and 63 struck from the respective upper and lower plates and journaled on a pin 64. A coil spring 65 is wound about the pin 64 and has one of its ends bearing against the upper and lower plates, respectively, so as to force them into closed position, as shown in Fig. 8. The upper plate 60 is formed with a plurality of channels 66 in its upper surface for the reception of a hair pin 67 with which the mass of hair designated 68 is held in the desired configuration during the drying operation. The upper plate 60 has a resilient end section 60ª separated therefrom. Inturned jaws 69 are formed on the outer ends of each of the upper and lower plates 60ª and 61, so as to firmly position the holding device with respect to the head of the subject by gripping the remaining mass of hair close to the head. An air receiving conduit 70 is formed in the upper plate 60 and is split longitudinally as at 71, so as to enable the device to be snapped about the elbow 26 of any of the individual air conduits. Obviously, any suitable fastening means may be used to connect the air conduit to the forming device.

The type of forming device shown in Figs. 11, 12, and 13 is adapted to be used to form waves in the hair of the subject and includes opposed clamping jaws 80 and 81 each having a channel 82 adjacent their upper ends formed as a part of a cylinder and terminating in upstanding ears or finger pieces 83. The channel parts 82 are adapted to be held in intimate bearing relation to a hollow perforated distributor tube 84 by a spring clip 85 which bears against the outside of the jaws 80 and 81 and urges them together to the position shown in Fig. 12. The spring clip 85 is preferably made integral with an upstanding tubular nipple 86 slotted longitudinally of its length as at 87 to receive the elbow 26 of one of the air conduits. The distributor tube 84 has a centrally disposed upstanding receiving conduit 88 which is inserted in the nipple 86 so that air from the elbow 26 passes through the nipple 86, the receiving conduit 88 and into the distributor tube 84. Since the perforated distributor tube runs throughout the length of the forming device, the distribution of air over the entire mass of hair held between the jaws 80 and 81 is substantially uniform. Small teeth 89 are struck from the jaws 80 and 81 and serve to anchor the device firmly with respect to a mass of hair designated by 90.

The attachments are usually applied to curls or peaks of waves as the hair at these points is gathered in concentrated masses that are inclined to dry very slowly. The rest of the hair generally is in light strands that dry more rapidly. Occasionally, however, in the dressing of the hair a heavy section of hair may be left straight. This mass of hair will ordinarily retain its moisture for quite a period of time. My invention may be used to facilitate the drying of such hair. The attachment illustrated in Fig. 8, while primarily designed for curls, will also grasp a solid body of straight hair without disturbing the hair arrangement. The attachment shown in Fig. 11 may be adapted to straight hair by bending the side lip portions so they lie in substantially the same plane as the hair gripping prongs 89. The latter may then reach the hair that is lying flat and will grasp it without pulling it into a wave. To dry hair before it is dressed or otherwise arranged, these same attachments may be placed in engagement with the hair at various locations about the head irrespective of any contemplated coiffure.

In operation the forming units are placed on the subject's head to form the desired curls or waves in the hair and to hold the hair in the proper position for drying. The several elbows 26 are then engaged with the stems of the forming units, which latter are hollow throughout their entire length. The heating unit is then turned on and allowed to come up to temperature after which the motor 3 and blower 3ª are started. Air is then sucked in through the inlet port 6 and inlet conduit 4 and forced out through exhaust

conduit 5 and its extension 10 into the heating chamber 14. The air is heated within the chamber 14 and is distributed through the various tubes 24 into the forming units where it dries the subdivided mass of hair held by the particular unit. It will be seen that by the rotatable connections of the forming unit with the elbow 26 and of the elbow 26 with the distributing tubes 24 that the subject is free to turn her head into almost any desired position without disturbing the drying operation. This obviates the disadvantage of close contact with a single conduit carrying heated air in which the subject must maintain her head in a particular position in order that the drying operation may be carried out. With the use of this invention there is no need to place hair nets over the hair while it is being dried. These are utilized in all instances at the present time to keep the hair from being disarranged by the force of the air discharged by the ordinary drier, and represent an item of considerable expense and trouble.

A further advantage of the present invention is that by drying small masses of hair with each conduit the drying operation is carried on much more rapidly than is the case where a single heated air stream is blown against the subject's head with no attempt to direct the air against that part of the hair lying close to the scalp. By the present apparatus, air under pressure is forced into intimate contact with each small mass of hair. Because of the effectiveness from a drying standpoint of this apparatus through the directing of the air in such intimate contact with the hair, it is not necessary to have the air as hot as it is used in ordinary hair driers. The heat of the air in such hair driers makes them very uncomfortable, particularly since the hot air is not only driven against the surface of the head, but also along the neck and face. As the air from the present apparatus is discharged only within the hair and diffuses away from the head, even its slight warmth is not brought in contact with the face and neck. The lower drying temperature of the air is much better for the hair as heat is inclined to dry out the oil of the hair, an element necessary to preserve its health and beauty.

The noise with this unit is less objectionable because the blower is further away from the head of the customer, it does not have the full opening found in models now marketed which seems to amplify the noise, the air escapes only through the restricted ports of the hair curling attachments, and the noise of the escaping air is muffled by the strands of hair held by the attachments.

Because of the speed with which it acts in drying the hair, a customer may have her hair combed out (this is done to remove the dried particles of wave-fixing solution) and otherwise finished up before she leaves the beauty shop. This saves her the embarrassment of leaving the shop with her hat in hand and her hair still plastered with moisture, which is the usual practice as few women seem to care to sit under the present driers for the time sufficient to completely dry the hair. Instead, they prefer to let their hair dry of its own accord and either to comb it out and put on the finishing touches at home or to return to the shop the next day to have the work completed.

If desired, a suitable hygroscopic material such as activated alumina or dehydrated calcium sulphate may be placed within the housing formed by the plates 8 and mesh work 9 and air drawn into the housing by the suction action of the blower 3a is dehumidified before being used. In this manner, the drying operation may be expedited since the capacity of the air to absorb moisture is distinctly increased. The air may also be filtered and cleaned by the introduction of the filter unit adjacent the intake conduit.

While the invention has been shown in connection with a particular form and disposition of the parts, it will be readily appreciated that other arrangements may be made without departing from the invention as defined in the appended claims.

Having thus described my invention, what I claim as new, and desire to secure by United States Letters Patent, is:

1. In a hair drying apparatus, a chamber, heating means associated with said chamber, a plurality of relatively small flexible conduits leading from said chamber, means to force air through said chamber into said conduits, connector pieces held in the free ends of said conduits, and means adapted to be attached to said connector pieces to hold a mass of hair to be dried and force air from the conduits therethrough.

2. In a hair drying apparatus, a chamber, an electric heating element in said chamber, a plurality of relatively small flexible conduits leading from said chamber, means to force air through said chamber into said conduits, connector pieces rotatably held in the free ends of said conduits, and hollow hair forming devices rotatably attached to said connector pieces and adapted to hold a mass of hair to be dried and force air therethrough from said conduits.

3. In combination, a hollow hair holding device adapted to hold a mass of hair to be dried in such a configuration that the dried hair will be formed, means for heating air, and means to force air heated by said last means under pressure into said holding device so that the air must pass through hair held thereby.

4. In a hair drying apparatus, a hair clamp having openings therein, means for heating air, and means for forcing air heated by said last means under pressure into the clamp and through said openings through hair held thereby.

5. A hair forming device including a pair of opposed forming members having outwardly flaring lower ends and having arcuate upper sections, a distributor tube received between the arcuate sections of said members and being perforated at intervals throughout its length, a connector member fixed to said distributor tube and projecting upwardly therefrom and adapted to receive a conduit carrying air under pressure which passes through said distributor tube to hair held between said forming members, and a resilient clip surrounding said connector member and engaging each of said forming members to urge them together.

6. The method of drying hair which includes arranging and holding the hair in desired configurations, heating air, liberating a plurality of streams of the heated air under pressure in close contact with the hair, and holding the hair in the path of the released air whereby the liberated air is forced to pass through the hair.

EARL L. ROCKWOOD.