2 Sheets—Sheet 1.

E. J. HYDE.

Coffee Roaster.

No. 35,758. Patented July 1, 1862.

Fig. 2.

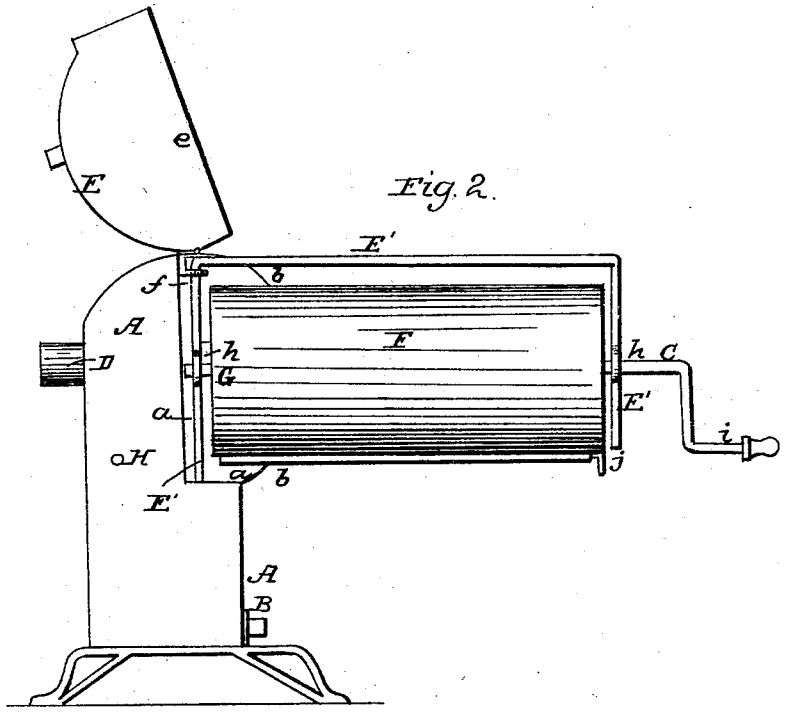

Fig. 1.

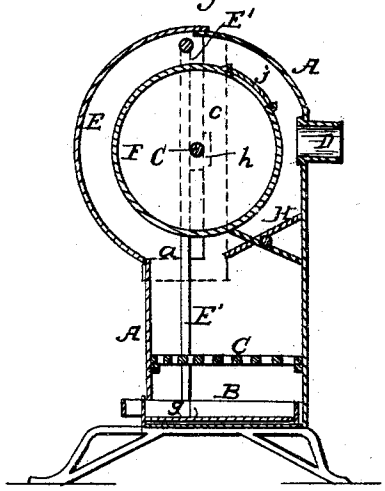

Fig. 4.

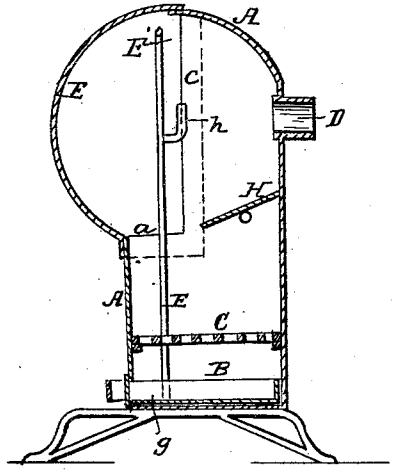

Witnesses:
Gustavus Dieterich.
Edwin S. Isaac.

Inventor:
Edward J. Hyde
by Henwick & Lawrence
Mason. Attorneys.

N. PETERS, Photo-Lithographer, Washington, D. C.

2 Sheets—Sheet 2.

E. J. HYDE.

Coffee Roaster.

No. 35,758. Patented July 1, 1862.

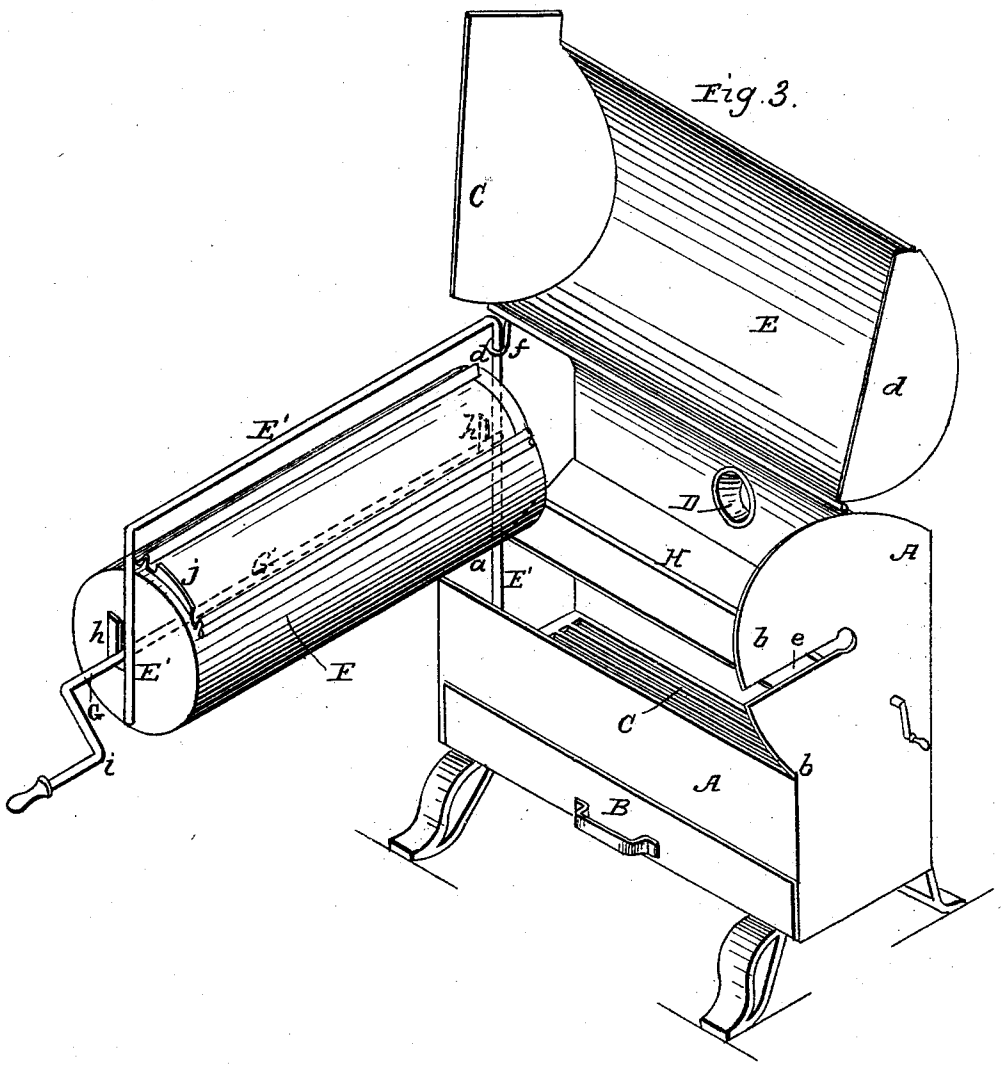

Witnesses:
Gustavus Dieterich
Edwin S. Raab

Inventor:
Edward J. Hyde.
by
Mason, Fenwick & Lawrence
Attorneys.

N. PETERS. Photo-Lithographer. Washington, D. C.

UNITED STATES PATENT OFFICE.

EDWARD J. HYDE, OF PHILADELPHIA, PENNSYLVANIA.

IMPROVEMENT IN COFFEE-ROASTERS.

Specification forming part of Letters Patent No. **35,758**, dated July 1, 1862.

To all whom it may concern:

Be it known that I, EDWARD J. HYDE, of the city and county of Philadelphia and State of Pennsylvania, have invented a new and Improved Coffee-Roaster and Stove Combined; and I do hereby declare that the following is a full, clear, and exact description of the same, reference being had to the accompanying drawings, forming part of this specification, in which—

Figure 1 is a vertical transverse section of my improved combined coffee-roaster and stove. Fig. 2 is an end view of the same, the parts being adjusted for discharging the roasted coffee. Fig. 3 is a perspective view, the parts being in nearly the same positions as in Fig. 2. Fig. 4 is a section of the stove with the roasting-cylinder removed from it entirely.

Similar letters of reference in the several figures indicate corresponding parts.

The nature of my invention consists, first, in an organization which comprises a stove constructed with a fire-grate and a divided nearly-cylindric drum, a regulating-damper, a swinging crane, and a revolving cylinder with a crank-shaft; second, in a manner of arranging the crane and coffee-cylinder so that the cylinder revolves on the crane while the roasting process is being performed, and that the crane swings with the cylinder out of the stove to discharge the roasted coffee and receive a fresh supply; third, in a construction of the fixed part of the drum of the stove with one of its end pieces narrow and the other wide, and the adjustable section of the drum with one of its end pieces wide and the other narrow, but in a converse order to that of the end pieces first mentioned, so that the crane with the coffee-roasting cylinder may be swung out at right angles to the front of the stove; also that the ends of the drum may be perfectly closed in when the coffee-cylinder and the adjustable section of drum are adjusted for the roasting process; fourth, in the arrangement of the damper so that the flame may be passed directly off to the flue, or nearly around the coffee-cylinder before it reaches the flue, during the process of roasting; fifth, in having the coffee-roaster and heater so combined that the roaster may be removed and the heater used simply for warming the room.

To enable others skilled in the art to make and use my invention, I will proceed to describe the same with reference to the drawings.

A represents the stove constructed with ash-drawer B, grate C, draft-flue D, and an adjustable piece, E, which serves as a fuel-door, and may be thrown up so as to convert the stove into an open "Franklin," or thrown down so as to make it a "close" stove. The door E might be fitted to slide or to open by means of turn-buttons, or in any other well-known way, and yet not depart from the spirit of my invention.

At one end of the stationary portion of the stove, about one-half the width of the end piece is cut away, as indicated at *a*, Fig. 2. At the other end about that amount of width as was removed at *a* is added to the end piece of the stove, as indicated at *b*, Fig. 3.

The hinged piece E is attached to the upper edge of the stationary drum portion of the stove, and its end pieces are constructed—one narrow and the other wide, as indicated at *c d*—so as to fit over the respective end pieces *a b* to the extent necessary to make a close stove while roasting coffee, the end pieces *c d* closing the space *a* and the slot *e*, which are formed for a purpose presently stated.

Within this stove an angular crane, E′, is arranged so that it has its axis at one end of the stove, its supports *f g* being formed on or attached to the inside of the stove, as shown in the drawings. The vertical limbs of the crane have journal-brackets *h h* formed on or attached to them at such points as will suit for a proper-sized roasting-cylinder to be revolved below the horizontal limb of the crane, as illustrated in Fig. 2. In location the crane stands about centrally in the stove, and on its brackets *h h*, which are open at top, a cylindric coffee-roaster, F, is hung by means of a crank-shaft, G, which extends through the cylinder, so as to form bearings and a handle, *i*. This cylinder is provided with a slide, *j*, which covers an opening through which the coffee to be roasted is introduced and the roasted coffee discharged.

When the cylinder is swung on the crane into the stove, the slot *e* admits the crank-handle *i* to follow, and the circular terminus of the slot affords a support to the shaft.

When the cylinder is swung out of the stove,

either for the purpose of being charged with coffee or uncharged, the space *a* allows its confined end to stand in the position shown in Fig. 2, or the cylinder to stand at a right angle to the front of the stove.

In order to swing the cylinder into or out of the stove, the adjustable section E of drum part of the stove, must be thrown up to the position shown in Figs. 2 and 3 from the position shown in Fig. 1, or be taken off, in case it is fastened by buttons or fitted to slide.

In Fig. 1 the manner in which the widened end piece of the hinged portion E closes the space *a* and overlaps the stationary end piece of drum is shown by dotted lines.

Between the back of the stove and the cylinder F a damper, H, is pivoted centrally, and by turning this damper to the position shown in red the flame from the fire is compelled to pass over the top of the cylinder; but by allowing it to stand as shown in black the flame passes directly to the flue. Thus the quantity of heat may be controlled, as circumstances may require, in the process of roasting coffee.

In case no coffee is required to be roasted for a length of time, the cylinder is lifted out of the crane and set aside and the stove used for simply warming the store or room in which it may be situated, under which use the hinged portion E may be thrown up so as to expose a cheerful fire, or thrown down so as to close the stove.

Other substances than coffee may of course be roasted or cooked with the before-described roasting apparatus.

What I claim as my invention, and desire to secure by Letters Patent, is—

1. So combining a stove, a crane, and a roaster that the roaster may be revolved upon the crane over the fire, swung out horizontally from the stove to an angular position therewith, and in this position be turned upon the crane to empty its contents, as set forth.

2. The combination, substantially as herein described, of the crane E′ and roaster F, for the purpose set forth.

3. The manner, substantially as herein described, of constructing the end portions of the stove A, in combination with the manner of constructing the end portions of the adjustable door E, for the purpose set forth.

4. The arrangement of the damper H, in combination with a removable roaster, F, for the purpose set forth.

Witness my hand and seal, in the matter of my application for a patent for a combined stove and coffee-roaster, this 7th day of May, A. D. 1862.

EDWD. J. HYDE. [L. S.]

Witnesses:
EDWIN S. JACOB,
GUSTAVUS DIETERICH.