Oct. 23, 1956 H. D. TUETH 2,767,449

MOLD

Filed Aug. 9, 1952

Fig. 1

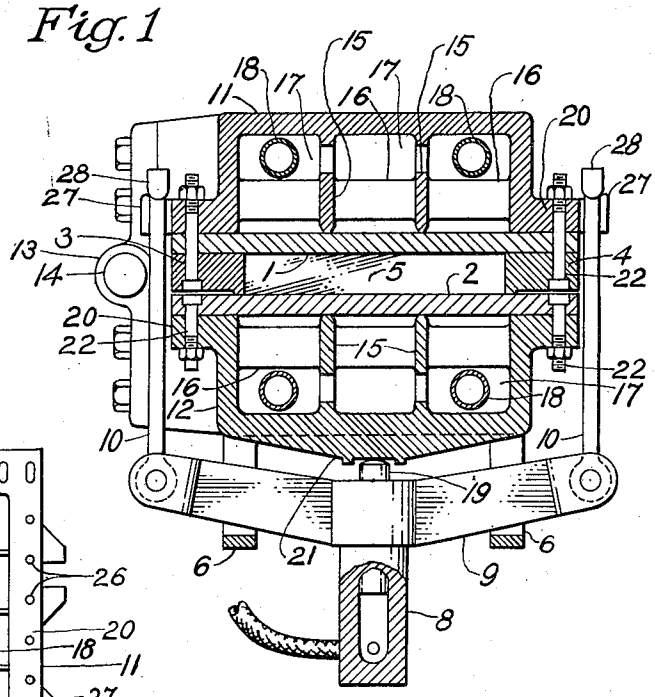

Fig. 2

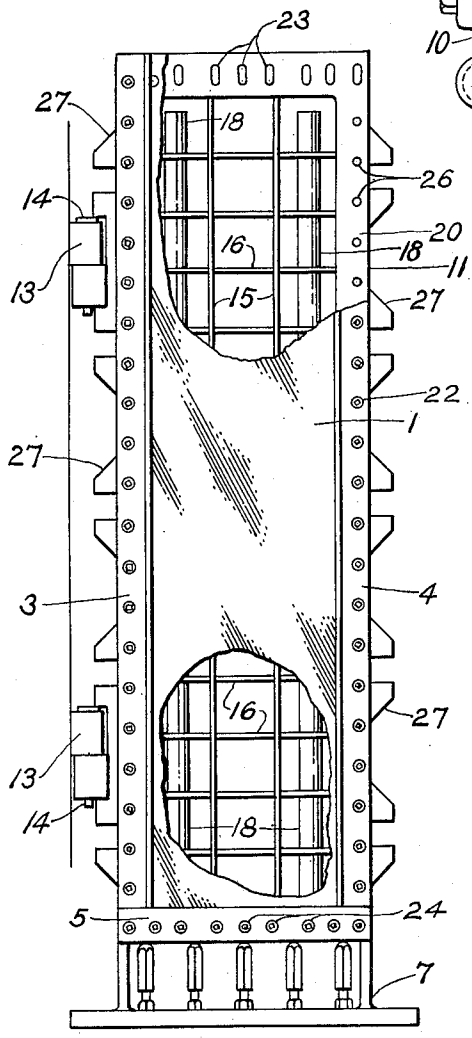

Fig. 3

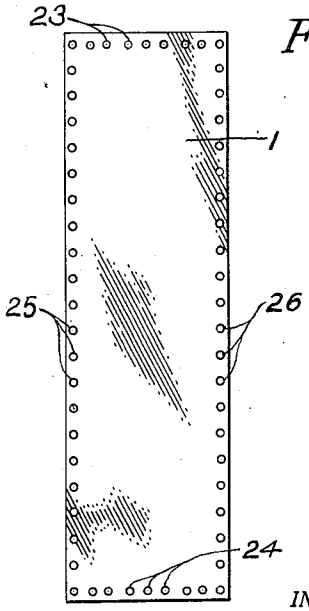

INVENTOR.
HOWARD D. TUETH
BY
John D. Wilkins
AGENT

United States Patent Office 2,767,449
Patented Oct. 23, 1956

2,767,449

MOLD

Howard D. Tueth, Alton, Ill., assignor to Olin Mathieson Chemical Corporation, a corporation of Virginia

Application August 9, 1952, Serial No. 303,479

2 Claims. (Cl. 22—144)

This invention relates to a mold for casting of metal and more particularly to an improved permanent water-cooled metal mold of the vertical type employed in the casting of elongated slabs of metal.

Generally permanent molds of this type consist of a stationary elongated vertical member known as the mold back supported in an upright position and a complementary elongated vertical member known as the mold front supported by hinges on one side of the mold back and capable of being swung like a door against the mold back to define between both members on closure a vertically elongated rectangular casting chamber of a split mold open at the top. To close this type of mold and after closure to avoid molten metal leakage from the casting chamber during the molten metal pouring operation, the vertical members constituting the halves of the split mold must be held together or locked by some clamping means preferably a series of yokes spaced along the height of the elongated slab mold as is well known to the art as typified by U. S. Patent No. 1,615,086; and it has been customary for each of such yoke type clamps to be associated with a manually operated jack screw to make a presser screw arrangement for holding the mold halves together to prevent the aforementioned leakage of molten metal. But more recently, according to U. S. Patent No. 2,587,061, the halves of improved vertical slab molds having yoke type clamps have been locked together by means of equalized fluid pressure operated rams far more firmly, evenly and dependably than was possible with the old presser screws.

It is obvious that the more intense and effective the clamping of the mold the more likely there is to be a problem with respect to the pressure-applying supporting frames and the water cooled copper face plates of both the mold front and the mold back primarily because parts of the face plates, which together with side spacer bars and a bottom spacer bar define the casting chamber of the mold, are directly exposed to both the heat of molten metal and hot sections of the ingot and also the cooling water directly applied thereto by way of suitable recesses serving as a water chamber and conduit in the mold back and the mold front. Under such wide disparity of temperatures, various parts of the copper face plates and also the long side spacer bars tend to expand or contract or buckle during the casting operation and the face plates, in particular, undergo undesirable growth from changes in crystal structure. Although substantially all of the usual distortion and resultant inability to properly close the slab mold is prevented by resort to fluid pressure operated clamping rams, it has been found that under constraint of fluid pressure clamping tremendous and destructive stresses may be set up in parts of the mold members and transmission of the holding forces necessary to constrain the face plates and spacer bars is accompanied by early breakage of a relatively costly piece of casting equipment feasible in practice only if of such long useful life as to be deemed "permanent".

Because of the very effective clamping action obtained by the fluid pressure, the valuable advantages obtained with the mold of aforementioned U. S. Patent No. 2,587,061, are accompanied by early failure in certain structural parts of the hitherto common mold front and mold back; and, therefore, one object of the present invention is to provide a novel and improved elongated slab mold of the permanent type having fluid clamping means and an improved mold front and mold back structure capable of withstanding application of high clamping forces without premature failure of mold parts which failure is responsible not only for undue shortening of the life of the mold but also for frequent and costly repairs.

Another object is the provision of a new and improved construction for attaching, holding, and clamping the copper face plate in a permanent water cooled slab mold of the type described.

Further objects will become apparent from the following detail description referring to the accompanying drawing in which:

Figure 1 is a sectional plan view of the improved slab mold of this invention; and

Figure 2 is an elevational view of the mold back with part of the face plate broken away showing a preferred manner of fastening the plate over the opening of the water distributing recess of a mold frame member and showing part of the rib grid in the recess.

Figure 3 is an elevational view of a complete face plate of the mold of this convention.

In accordance with the present invention, there is provided an improved water cooled slab mold having fluid pressure clamping means, a novel recessed frame structure adapted to efficiently impart the fluid pressure clamping forces to the peripheral areas of the face plates contiguous with the spacer bars, and an advantageous means for attaching the face plate to its frame to allow accommodation and distribution rather than concentration of the undesirable effect of growth of the face plate. The features of this improved construction are more fully disclosed in the following description of a preferred embodiment illustrated in the drawing.

The slab mold of this invention comprises in the main, Fig. 1, a hingedly connected mold back and a complementary mold front providing therebetween a casting chamber defined by face plates 1 and 2, a pair of side spacer bars 3 and 4, and a bottom spacer bar 5. The spacer bars 3, 4 and 5 are attached to one of the face plates, generally to the stationary mold back face plate; and these bars together with the two plates 1 and 2 constitute the immediate molten metal confining walls of the mold which is supported in an upright position by means of the base bracket or foot 7, Fig. 2, attached to the frame portion of the mold back. Clamping means for holding the front and back parts of the mold consist of a series of fluid operated rams 8, associated yokes 9 and pairs of links 10 pivotally connected with each yoke at the bifurcated extremities of the yoke. Brackets 6 serve to carry the clampings means in vertically spaced arrangement on the mold.

The mold back and mold front each in turn consists of a face plate and also a face plate supporting member known as a frame. As shown in Fig. 1 the mold back includes a mold back face plate 1 and a mold back frame 11, while the mold front includes a mold front face plate 2 and a mold front frame 12 having supporting hinges 13 by which the mold front is hingedly connected to the mold back to pivot for opening and closing about the hinge pin 14. Each of the face plates 1 and 2 is made of a suitable conductive material such as copper. Each of the frames 11 and 12 is a heavy cast iron or steel casting recessed like a rather shallow basin to provide compartments for conveying and applying cooling fluid such as water to one side of the copper face plate extending

across the recess and closing the water compartment except for a water inlet and outlet connection elsewhere provided.

The recess in each frame, Fig. 1 and Fig. 2, is spanned both longitudinally by bracing ribs 15, and also transversely by bracing ribs 16, at least the latter of which are suitably and uniformly orificed to allow for passage of cooling water in filling of the recess from the bottom during the molten metal pouring operation. Orifices 17 in transverse ribs 16 provide cooling water passageways in the grid system of longitudinal and transverse ribs which is integral with the frames and serves to support the face plates across the expanse of the recess in the frames and to prevent undesirable planar flexure of the face plate under the influence of the force of the molten metal pressure head.

Whereas heretofore it has been the practice to discharge the cooling water from the top of the recess by way of a single stand pipe, which necessitated provision along with other smaller orifices of a single vertical series of enlarged orifices in the transverse ribs for accommodation of such stand pipe of adequate capacity, I now provide in each recess at least two small discharge standpipes 18 any one of which is easily accommodated in any of the orifices 17 and not requiring an enlarged orifice necessarily associated with a reduction in transverse rib cross section and resultant rib-weakness adjacent the large single and heretofore usual central discharge stand pipe. The transverse rib sections 16 of the mold improvement of this invention are all equal and of maximum strength as governed by the minimum size of orifices 17 needed for adequate cooling water circulation. Whatever the rib transverse section need be, the construction of this invention assures that no reduction need occur at any rib section to allow for water discharge means. As an alternative construction the water discharge means may be located outside of the frame recess and connected to the top portion of the exterior of the frame where the resulting greater bulk of the slab mold members is not objectionable. By means of this feature undue stress concentration and fracture is avoided in the transverse ribs while frames 11 and 12 are subjected to great forces when closed and while molten metal is being poured against face plates 1 and 2.

To maintain the mold closed in an advantageous manner, clamping forces are applied, Fig. 1, by means of the plungers 19 of a vertically arranged battery of fluid pressure operated rams 8 acting in unison on vertically spaced portions of the exterior or back of one of the frames, usually the mold front frame 12, i. e., on the outside of the door member of the slab mold. To more effectively distribute the force of each plunger 19 to the frame flange 20 for uniform application of clamping pressure to the side spacer bars 3 and 4 and bottom bar 5 and the peripheral portions of face plates 1 and 2, there is provided on the exterior of the frame 12 opposite each plunger 19 a tapered external rib 21 the heavy middle portion of which is adapted for direct and forceful contact or seating with the end of the plunger 19 during clamping. Each tapered external rib 21 forms a pressure applying foot for the plunger 19 acting upon it. By means of this feature of the invention it is possible to avoid stress concentration and destructive flexure centrally of the frame along the planar vertical portion forming the wall of the recess opposite the face plate.

Further this invention provides for reversing the face plates during their life in order to distribute the growth and distortion and also provides for accommodation of the effect of such growth and distortion which under the fluid pressure clamping system becomes very pronounced at the upper end of the face plates adjacent the open top of the casting chamber. As illustrated in Fig. 1 each of the copper face plates, having a thickness of around 1¾ inches, is detachably secured by suitable fastening means such as bolts 22 or the like to the outer edge or flange 20 of its supporting frame. Under continued operation the effects of growth and thermal distortion are concentrated at the upper end of each face plate and such effects evidence themselves by increased length of the plate and a convexity in the upper edge which might be referred to as a protrusion. Unless the measures of this invention are employed there develops eventually in the area of this protrusion a water releasing crack in each face plate running from the upper edge of the plate; but even before this stage and during operation great stress is put on the upper flange of each frame as its distorted face plate acts through the bolts 22 in this area on the frame, which in turn ultimately fractures under these conditions. To prevent destruction of both face plates and frames and at the same time to preserve the advantages of application of high but uniform fluid pressure to clamp the mold, both the mold back face plate 1 and correspondingly the flanges of its frame 11, as illustrated in Fig. 2, are provided with a peripheral array of fastener openings or bolt holes arranged so that after a part of its life as determined in practice has elapsed the face plate is adapted to be detached, turned bottom end over top end, and then reattached in inverted position for further service. The arrangement contemplated is such that when the face plate is turned after release from the frame and is positioned in the inverted position, the fastening openings in the face plate match with the array of openings in the frame as they did before inversion. Where it is desired that inversion of the copper face plates may be accomplished by rotating each plate in its own plane it is sufficient that the upper array of openings 23, Fig. 2, passing through both the plate or frame as compared with the corresponding lower array 24 is from left to right a reflection of the lower from right to left and similarly that each left hand vertical array 25 from top to bottom is a reflection of each right hand array 26 from bottom to top. However, a preferred and simplified arrangement is that shown in Fig. 2 where each array not only meets the above noted requirements but also each is symmetrical with respect to a median line normal to its centerline, i. e. one half of each array is simply a reflection of the other half. A further variation of the face plate fastening arrangement may be obtained by eliminating both the left hand array of openings 25 and right hand array of openings 26 and substituting therefore a slidable edge clamping or tongue and groove connection, if desired, and by using such slidable lateral connections in conjunction with a symmetrical upper and lower array of openings as described hereinbefore. It has been found that inverting of the ends of the elongated copper face plates, as described herein, results in prolongation of the total service life of the face plates and particularly in slab molds of the type having fluid pressure clamping means.

To accommodate the aggravated growth of the face plates the upper array of openings 23 passing through the frames according to this invention consists of slots considerably elongated in the direction of the length of the face plate rather than the usual circular opening. For example, in a mold having a face plate length of about 100 inches the upper slots are formed by elongating the regular bolt hole diameter by about ½ of an inch. This provision provides for the abnormal growth of the face plates manifested at the face plate ends and prevents application of destructive stresses on the upper part of the frames because of the permanent distortion of the upper end of each face plate together with the thermal expansion superposed thereon.

The process of casting in the mold of this invention is initiated by dressing the face plate and spacer bar surfaces facing the interior of the casting chamber with a suitable dressing material such as graphite or bone ash or lampblack suspended in a vehicle as is known to those skilled in the art and the dressing is allowed to dry sufficiently. To make up the casting chamber the mold front is then pivoted about hinge pins 14 to close on the mold back which brings the mold front face plate 2 into contact with side spacer bars 3 and 4 and the bottom spacer

bar 5. The mold operator next places the links 10 of each yoke 9 into the slots of the lugs 27 provided on the sides of the mold back frame 11 as is shown in Fig. 1. The enlarged heads 28 on the end of each link 10 are thus in position to engage with the corresponding lugs 27 when the battery of rams 8 are actuated as a unit driving the plungers 19 into the heavy middle portions of the tapered external ribs 21 and clamping the mold halves together. Before the final operation of pouring molten metal into the casting chamber, a cooling medium such as water is admitted at the bottom of each cooling compartment recess of the frames 11 and 12 to fill each with a stream of coolant discharged from the top of the recess by way of standpipes 18.

After many slabs have been cast with the apparatus of this invention, the only attention required by the mold is an occasional resurfacing of the copper face plates on the side which meets the molten metal to maintain a suitable flat surface for reception and retention of the mold dressing at which time the face plates may be inverted conveniently provided the condition of the face plate end indicates the time for so doing has arrived. Resurfacing is repeated when necessary throughout the life of each face plate until the face plate has become so thin as to be no longer fit for further use.

Water cooled slab molds constructed in accordance with the foregoing description accomplish the objects of this invention and have all the advantages of a desirable type of mold clamp arrangement together with the long service life so essential with costly casting apparatus of this type. By means of this invention undesirable flexure and early breakage of the frame members and undesirable effects of face plate dimensional changes are avoided.

It is to be understood that various modifications of the embodiment described may be made without departing from the spirit and scope of the invention as set forth in the appended claims.

What is claimed as new and desired to be secured by Letters Patent of the United States is:

1. In a permanent metal fluid cooled mold for casting of elongated metal slabs having an open top vertical casting chamber defined by a pair of spaced elongated face plates, a pair of side spacer bars carried on one of the said face plates adjacent the lateral edges thereof and a bottom spacer bar carried on said face plate and extending from the lower end of one of said side spacer bars to the lower end of the other of said side spacer bars, and having a recessed coolant conveying frame contiguous with the exterior of each of said face plates, the improvement comprising in combination a plurality of fluid pressure operated means distributed uniformly throughout the length of and movably supported on the mold so as to be adapted to press upon the medial portion of at least one of said frames for clamping said face plates between said frames and for clamping said spacer bars between the face plates with high pressure adjacent said spacer bars, a face plate fastening arrangement symmetrical at least with respect to the longitudinally spaced ends of said face plate and including a plurality of fasteners and corresponding fastener openings at least at said longitudinally spaced ends, said openings in at least the upper end of at least said frame being longitudinally slotted to provide face plate fastening expansion clearance, said arrangement being adapted for reversibly attaching said face plate to its frame with respect to its longitudinally spaced ends whereby the end distortion of said face plate occasioned by said high pressure clamping is both distributed between said ends and also accommodated with respect to its frame, and a transversely extending rib structure in at least said medially pressed frame for receiving and transmitting the clamping forces acting at said medial portion through the frame to the lateral edge portions of said frame surrounding the recess in said frame without excessive flexure of said medial and lateral portions, said rib structure including ribs within said recess being so constructed and arranged in cross section as to be free from the occurrence of the least section at said medial portion and also including external ribs of heavy midsection and tapering to lesser cross section at the ends adjacent said lateral edge portions of said frame.

2. The mold of claim 1 wherein the ribs in the recess at least on each side of the medial portion are uniformly orificed and substantially uniform in cross section and which includes at least on each side of the medial portion a plurality of longitudinally extending coolant overflow standpipes each extending up through a corresponding orifice.

References Cited in the file of this patent

UNITED STATES PATENTS

1,542,643	Pettis	June 16, 1925
1,973,550	Todt	Sept. 11, 1934
2,310,805	Mueller	Feb. 9, 1943
2,428,657	Falk et al.	Oct. 7, 1947
2,428,659	Falk et al.	Oct. 7, 1947
2,587,061	Nelson	Feb. 26, 1952
2,600,559	McCauley	June 17, 1952

FOREIGN PATENTS

412,134	Great Britain	June 21, 1934