(12) STANDARD PATENT (11) Application No. **AU 2019439413 B2**
(19) AUSTRALIAN PATENT OFFICE

(54) Title
Using vapor pressure to determine concentrations of components in a multi-component fluid

(51) International Patent Classification(s)
G01F 1/84 (2006.01) ***G01N 7/14*** (2006.01)

(21) Application No: **2019439413** (22) Date of Filing: **2019.04.03**

(87) WIPO No: **WO20/204922**

(43) Publication Date: **2020.10.08**
(44) Accepted Journal Date: **2023.02.02**

(71) Applicant(s)
Micro Motion, Inc.

(72) Inventor(s)
WEINSTEIN, Joel;MORETT, David Martinez

(74) Agent / Attorney
Phillips Ormonde Fitzpatrick, PO Box 323, COLLINS STREET WEST, VIC, 8007, AU

(56) Related Art
US 2015/0293002 A1

(12) INTERNATIONAL APPLICATION PUBLISHED UNDER THE PATENT COOPERATION TREATY (PCT)

(19) World Intellectual Property Organization
International Bureau

(43) International Publication Date
08 October 2020 (08.10.2020)

WIPO | PCT

(10) International Publication Number
WO 2020/204922 A1

(51) International Patent Classification:
G01F 1/84 (2006.01) *G01N 7/14* (2006.01)

(21) International Application Number:
PCT/US2019/025542

(22) International Filing Date:
03 April 2019 (03.04.2019)

(25) Filing Language: English

(26) Publication Language: English

(71) Applicant: **MICRO MOTION, INC.** [US/US]; 7070 Winchester Circle, Boulder, Colorado 80301 (US).

(72) Inventors: **WEINSTEIN, Joel**; 3205 Martinique Avenue, Boulder, Colorado 80301 (US). **MORETT, David Martinez**; 201 N. McKinley Ave., Ft. Collins, Colorado 80521 (US).

(74) Agent: **VICK, Keith** et al.; THE OLLILA LAW GROUP LLC, 2569 Park Lane, Suite 202, Lafayette, Colorado 80026 (US).

(81) Designated States *(unless otherwise indicated, for every kind of national protection available)*: AE, AG, AL, AM, AO, AT, AU, AZ, BA, BB, BG, BH, BN, BR, BW, BY, BZ, CA, CH, CL, CN, CO, CR, CU, CZ, DE, DJ, DK, DM, DO, DZ, EC, EE, EG, ES, FI, GB, GD, GE, GH, GM, GT, HN, HR, HU, ID, IL, IN, IR, IS, JO, JP, KE, KG, KH, KN, KP, KR, KW, KZ, LA, LC, LK, LR, LS, LU, LY, MA, MD, ME, MG, MK, MN, MW, MX, MY, MZ, NA, NG, NI, NO, NZ, OM, PA, PE, PG, PH, PL, PT, QA, RO, RS, RU, RW, SA, SC, SD, SE, SG, SK, SL, SM, ST, SV, SY, TH, TJ, TM, TN, TR, TT, TZ, UA, UG, US, UZ, VC, VN, ZA, ZM, ZW.

(84) Designated States *(unless otherwise indicated, for every kind of regional protection available)*: ARIPO (BW, GH, GM, KE, LR, LS, MW, MZ, NA, RW, SD, SL, ST, SZ, TZ, UG, ZM, ZW), Eurasian (AM, AZ, BY, KG, KZ, RU, TJ, TM), European (AL, AT, BE, BG, CH, CY, CZ, DE, DK, EE, ES, FI, FR, GB, GR, HR, HU, IE, IS, IT, LT, LU, LV, MC, MK, MT, NL, NO, PL, PT, RO, RS, SE, SI, SK, SM, TR), OAPI (BF, BJ, CF, CG, CI, CM, GA, GN, GQ, GW, KM, ML, MR, NE, SN, TD, TG).

Declarations under Rule 4.17:
— *as to applicant's entitlement to apply for and be granted a patent (Rule 4.17(ii))*

Published:
— *with international search report (Art. 21(3))*

(54) Title: USING VAPOR PRESSURE TO DETERMINE CONCENTRATIONS OF COMPONENTS IN A MULTI-COMPONENT FLUID

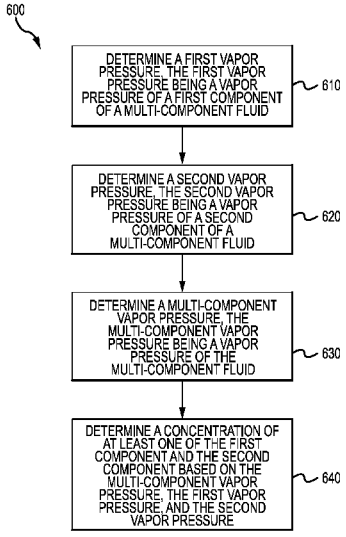

FIG.6

(57) Abstract: A system (700) for using a vapor pressure to determine a concentration of a component in a multi-component fluid is provided. The system (700) includes an electronics (710) communicatively coupled to a transducer (720) configured to sense a multi-component fluid. The electronics (710) is configured to determine a first vapor pressure, the first vapor pressure being a vapor pressure of a first component of the multi-component fluid, determine a second vapor pressure, the second vapor pressure being a vapor pressure of a second component of the multi-component fluid, and determine a multi-component vapor pressure, the multi-component vapor pressure being a vapor pressure of the multi-component fluid. The electronics (710) is also configured to determine a concentration of at least one of the first component and the second component based on the multi-component vapor pressure, the first vapor pressure, and the second vapor pressure.

WO 2020/204922 A1

USING VAPOR PRESSURE TO DETERMINE CONCENTRATIONS OF COMPONENTS IN A MULTI-COMPONENT FLUID

TECHNICAL FIELD

The embodiments described below relate to determining a concentration of a component in a multi-component fluid flow and, more particularly, using vapor pressure to determine concentrations of components in a multi-component fluid flow.

BACKGROUND

Vibrating sensors, such as for example, vibrating densitometers and Coriolis flowmeters are generally known, and are used to measure mass flow and other information for materials flowing through a conduit in the flowmeter. Exemplary Coriolis flowmeters are disclosed in U.S. Patent 4,109,524, U.S. Patent 4,491,025, and Re. 31,450, all to J.E. Smith et al. These flowmeters have one or more conduits of a straight or curved configuration. Each conduit configuration in a Coriolis mass flowmeter, for example, has a set of natural vibration modes, which may be of simple bending, torsional, or coupled type. Each conduit can be driven to oscillate at a preferred mode.

Material flows into the flowmeter from a connected pipeline on the inlet side of the flowmeter, is directed through the conduit(s), and exits the flowmeter through the outlet side of the flowmeter. The natural vibration modes of the vibrating system are defined in part by the combined mass of the conduits and the material flowing within the conduits.

When there is no-flow through the flowmeter, a driving force applied to the conduit(s) causes all points along the conduit(s) to oscillate with identical phase or a small “zero offset”, which is a time delay measured at zero flow. As material begins to flow through the flowmeter, Coriolis forces cause each point along the conduit(s) to have a different phase. For example, the phase at the inlet end of the flowmeter lags the phase at the centralized driver position, while the phase at the outlet leads the phase at the centralized driver position. Pickoffs on the conduit(s) produce sinusoidal signals representative of the motion of the conduit(s). Signals output from the pickoffs are processed to determine the time delay between the pickoffs. The time delay between the

two or more pickoffs is proportional to the mass flow rate of material flowing through the conduit(s).

Meter electronics connected to the driver generate a drive signal to operate the driver and determine a mass flow rate and other properties of a material from signals received from the pickoffs. The driver may comprise one of many well-known arrangements; however, a magnet and an opposing drive coil have received great success in the flowmeter industry. An alternating current is passed to the drive coil for vibrating the conduit(s) at a desired flow tube amplitude and frequency. It is also known in the art to provide the pickoffs as a magnet and coil arrangement very similar to the driver arrangement. However, while the driver receives a current which induces a motion, the pickoffs can use the motion provided by the driver to induce a voltage.

Vapor pressure is an important property in applications which handle flow and storage of volatile fluids such as gasoline, natural gas liquids, and liquid petroleum gas. Vapor pressure provides an indication of how volatile fluids may perform during handling, and further indicates conditions under which bubbles will likely form and pressure will likely build. As such, vapor pressure measurement of volatile fluids increases safety and prevents damage to transport vessels and infrastructure. For example, if the vapor pressure of a fluid is too high, cavitation during pumping and transfer operations may occur. Furthermore, vessel or process line vapor pressure may potentially rise beyond safe levels due to temperature changes. It is therefore often required that vapor pressure be known prior to storage and transport.

In many applications it is desired to also know the concentrations of components in a multi-component fluid. This may require additional equipment and/or laboratory samples. On-site measurement is more reliable, as it obviates the need for the periodic sampling and fully eliminates the risk of fluid property changes between the time of sample collection and laboratory assay. Furthermore, safety is improved by having real-time measurements, as unsafe conditions may be remedied immediately. Additionally, money is saved, as regulatory enforcement may be conducted via simple on-site checks, wherein inspection and enforcement decisions may be made with little delay or process cessation. Accordingly, it is desirable to determine the concentrations of the components in the multi-component fluid by using vapor pressures of the fluid.

SUMMARY

A system for using a vapor pressure to determine a concentration of a component in a multi-component fluid is provided. According to an embodiment, the system comprises an electronics communicatively coupled to a transducer configured to sense a multi-component fluid. The electronics is configured to determine a first vapor pressure, the first vapor pressure being a vapor pressure of a first component of the multi-component fluid, determine a second vapor pressure, the second vapor pressure being a vapor pressure of a second component of the multi-component fluid, determine a multi-component vapor pressure, the multi-component vapor pressure being a vapor pressure of the multi-component fluid, based on a gain of a drive signal provided to the transducer, and determine a concentration of at least one of the first component and the second component based on the multi-component vapor pressure, the first vapor pressure, and the second vapor pressure.

A method of using a vapor pressure to determine a concentration of a component in a multi-component fluid is provided. According to an embodiment, the method comprises determining a first vapor pressure, the first vapor pressure being a vapor pressure of a first component of the multi-component fluid, determining a second vapor pressure, the second vapor pressure being a vapor pressure of a second component of the multi-component fluid, using a transducer having the multi-component fluid to determine a multi-component vapor pressure, the multi-component vapor pressure being a vapor pressure of the multi-component fluid, based on a gain of a drive signal provided to the transducer, and determining a concentration of at least one of the first component and the second component based on the multi-component vapor pressure, the first vapor pressure, and the second vapor pressure.

ASPECTS

According to an aspect, a system (700) for using a vapor pressure to determine a concentration of a component in a multi-component fluid comprises an electronics (710) communicatively coupled to a transducer (720) configured to sense a multi-component fluid. The electronics (710) is configured to determine a first vapor pressure, the first vapor pressure being a vapor pressure of a first component of the multi-component fluid, determine a second vapor pressure, the second vapor pressure being a vapor

pressure of a second component of the multi-component fluid, determine a multi-component vapor pressure, the multi-component vapor pressure being a vapor pressure of the multi-component fluid, based on a gain of a drive signal provided to the transducer, and determine a concentration of at least one of the first component and the second component based on the multi-component vapor pressure, the first vapor pressure, and the second vapor pressure.

Preferably, the electronics (710) being configured to determine the concentration of at least one of the first component and the second component based on the multi-component vapor pressure, the first vapor pressure, and the second vapor pressure comprises the electronics (710) being configured to use equations:

$$P_m = P_1^* x_1 + P_2^* x_2; \text{ and}$$

$$x_1 + x_2 = 1;$$

where:

P_m is the multi-component vapor pressure and is a sum of the pressures exerted by each component of the multi-component fluid being a two-component fluid;

P_1^*, P_2^* are respectively the first vapor pressure and the second vapor pressure when the first component and the second component are pure fluids; and

x_1, x_2 are respectively mole fractions of the first and second component in the two-component fluid.

Preferably, the electronics (710) being configured to determine a concentration of at least one of the first component and the second component based on the multi-component vapor pressure, the first vapor pressure, and the second vapor pressure comprises the electronics (710) being configured to determine the concentrations of the first component, the second component, and a third component using equations:

$$P_m = P_1^* x_1 + P_2^* x_2 + P_3^* x_3;$$

$$x_1 + x_2 + x_3 = 1;$$

$$MW_{mix} = x_1 MW_1 + x_2 MW_2 + x_3 MW_3; \text{ and}$$

$$\frac{1}{\rho_T} = \frac{w_1}{\rho_1} + \frac{w_2}{\rho_2} + \frac{w_3}{\rho_3};$$

where:

P_m is the multi-component vapor pressure of the multi-component fluid where the multi-component fluid is a three-component fluid;

x_1, x_2, and x_3 are respective mole fractions of the first component, the second component, and the third component of the three-component fluid;

P_1^*, P_2^*, and P_3^* are respectively the first vapor pressure, the second vapor pressure, and a third vapor pressure where the first component, the second component, and the third component are pure fluids;

MW_{mix} is a molecular weight of the three-component fluid;

MW_1, MW_2, and MW_3 are respective molecular weights of the first component, the second component, and the third component;

w_1, w_2, and w_3 are respective mass fractions of the first component, the second component, and the third component in the three-component fluid and are respectively equal to x_1MW_1/MW_{mix}, x_2MW_2/MW_{mix}, and x_3MW_3/MW_{mix};

ρ_1, ρ_2, and ρ_3 are respective densities of the first component, the second component, and the third component of the three-component fluid; and

ρ_T is a density of the three-component fluid.

Preferably, the electronics (710) is further configured to determine a density of the multi-component fluid in the transducer (720) based on sensor signals provided by the transducer (720).

Preferably, the electronics (710) is further configured to determine a true vapor pressure of the multi-component fluid based on a static pressure of the multi-component fluid in the transducer (720).

Preferably, the electronics (710) is further configured to determine the vapor pressure based on a gain of a drive signal provided to the transducer (720).

Preferably, the electronics (710) is a meter electronics (20) and the transducer (720) is a meter assembly (10) of a vibratory meter (5).

According to an aspect, a method of using a vapor pressure to determine a concentration of a component in a multi-component fluid comprises determining a first vapor pressure, the first vapor pressure being a vapor pressure of a first component of the multi-component fluid, determining a second vapor pressure, the second vapor pressure being a vapor pressure of a second component of the multi-component fluid,

using a transducer having the multi-component fluid to determine a multi-component vapor pressure, the multi-component vapor pressure being a vapor pressure of the multi-component fluid, based on a gain of a drive signal provided to the transducer, and determining a concentration of at least one of the first component

and the second component based on the multi-component vapor pressure, the first vapor pressure, and the second vapor pressure.

Preferably, determining the concentration of at least one of the first component and the second component based on the multi-component vapor pressure, the first vapor pressure, and the second vapor pressure comprises using equations:

$$P_m = P_1^* x_1 + P_2^* x_2; \text{ and}$$

$$x_1 + x_2 = 1;$$

where:

P_m is the multi-component vapor pressure and is a sum of the pressures exerted by each component of the multi-component fluid being a two-component fluid;

P_1^*, P_2^* are respectively the first vapor pressure and the second vapor pressure when the first component and the second component are pure fluids; and

x_1, x_2 are respectively mole fractions of the first and second component in the two-component fluid.

Preferably, determining the concentration of at least one of the first component and the second component based on the multi-component vapor pressure, the first vapor pressure, and the second vapor pressure comprises determining the concentrations of the first component, the second component, and a third component using equations:

$$P_m = P_1^* x_1 + P_2^* x_2 + P_3^* x_3;$$

$$x_1 + x_2 + x_3 = 1;$$

$$MW_{mix} = x_1 MW_1 + x_2 MW_2 + x_3 MW_3; \text{ and}$$

$$\frac{1}{\rho_T} = \frac{w_1}{\rho_1} + \frac{w_2}{\rho_2} + \frac{w_3}{\rho_3};$$

where:

P_m is the multi-component vapor pressure of the multi-component fluid where the multi-component fluid is a three-component fluid;

x_1, x_2, and x_3 are respective mole fractions of the first component, the second component, and the third component of the three-component fluid;

P_1^*, P_2^*, and P_3^* are respectively the first vapor pressure, the second vapor pressure, and a third vapor pressure where the first component, the second component, and the third component are pure fluids;

MW_{mix} is a molecular weight of the three-component fluid;

MW_1, MW_2, and MW_3 are respective molecular weights of the first component, the second component, and the third component;

w_1, w_2, and w_3 are respective mass fractions of the first component, the second component, and the third component in the three-component fluid and are respectively equal to x_1MW_1/MW_{mix}, x_2MW_2/MW_{mix}, and x_3MW_3/MW_{mix};

ρ_1, ρ_2, and ρ_3 are respective densities of the first component, the second component, and the third component of the three-component fluid; and

ρ_T is a density of the three-component fluid.

Preferably, the method further comprises determining a density of the multi-component fluid in the transducer based on sensor signals provided by the transducer.

Preferably, the method further comprises determining a true vapor pressure of the multi-component fluid based on a static pressure of the multi-component fluid in the transducer.

Preferably, the method further comprises determining the vapor pressure based on a gain of a drive signal provided to the transducer.

Preferably, the transducer is a meter assembly of a vibratory meter.

BRIEF DESCRIPTION OF THE DRAWINGS

The same reference number represents the same element on all drawings. It should be understood that the drawings are not necessarily to scale.

FIG. 1 shows a vibratory meter 5.

FIG. 2 is a block diagram of the meter electronics 20 of vibratory meter 5.

FIG. 3 shows a graph 300 illustrating a relationship between a drive gain and a gas-liquid ratio that can be used to determine a vapor pressure using a vapor pressure meter factor.

FIG. 4 shows a graph 400 illustrating how a static pressure of a fluid in a vibratory meter may be used to determine a vapor pressure.

FIG. 5 shows a system 500 for determining a vapor pressure of a fluid.

FIG. 6 shows a method 600 of using a vapor pressure to determine a concentration of a component in a multi-component fluid.

FIG. 7 shows a system 700 for using a vapor pressure to determine a concentration of a multi-component fluid.

DETAILED DESCRIPTION

FIGS. 1 - 7 and the following description depict specific examples to teach those skilled in the art how to make and use the best mode of embodiments of using vapor pressure to determine concentrations of components in a multi-component fluid. For the purpose of teaching inventive principles, some conventional aspects have been simplified or omitted. Those skilled in the art will appreciate variations from these examples that fall within the scope of the present description. Those skilled in the art will appreciate that the features described below can be combined in various ways to form multiple variations of using vapor pressure to determine the concentrations of the components in the multi-component fluid. As a result, the embodiments described below are not limited to the specific examples described below, but only by the claims and their equivalents.

FIG. 1 shows a vibratory meter 5. As shown in FIG. 1, the vibratory meter 5 comprises a meter assembly 10 and meter electronics 20. The meter assembly 10 responds to mass flow rate and density of a process material. The meter electronics 20 is connected to the meter assembly 10 via leads 100 to provide density, mass flow rate, temperature information over path 26, and/or other information.

The meter assembly 10 includes a pair of manifolds 150 and 150', flanges 103 and 103' having flange necks 110 and 110', a pair of parallel conduits 130 and 130', driver 180, resistive temperature detector (RTD) 190, and a pair of pickoff sensors 170l and 170r. Conduits 130 and 130' have two essentially straight inlet legs 131, 131' and outlet legs 134, 134', which converge towards each other at conduit mounting blocks 120 and 120'. The conduits 130, 130' bend at two symmetrical locations along their length and are essentially parallel throughout their length. Brace bars 140 and 140' serve to define the axis W and W' about which each conduit 130, 130' oscillates. The legs 131, 131' and 134, 134' of the conduits 130, 130' are fixedly attached to conduit mounting blocks 120 and 120' and these blocks, in turn, are fixedly attached to manifolds 150 and 150'. This provides a continuous closed material path through meter assembly 10.

When flanges 103 and 103', having holes 102 and 102' are connected, via inlet end 104 and outlet end 104' into a process line (not shown) which carries the process material that is being measured, material enters inlet end 104 of the meter through an orifice 101 in the flange 103 and is conducted through the manifold 150 to the conduit mounting block 120 having a surface 121. Within the manifold 150 the material is divided and routed through the conduits 130, 130'. Upon exiting the conduits 130, 130', the process material is recombined in a single stream within the mounting block 120' having a surface 121' and the manifold 150' and is thereafter routed to outlet end 104' connected by the flange 103' having holes 102' to the process line (not shown).

The conduits 130, 130' are selected and appropriately mounted to the conduit mounting blocks 120, 120' so as to have substantially the same mass distribution, moments of inertia and Young's modulus about bending axes W--W and W'--W', respectively. These bending axes go through the brace bars 140, 140'. Inasmuch as the Young's modulus of the conduits change with temperature, and this change affects the calculation of flow and density, RTD 190 is mounted to conduit 130' to continuously measure the temperature of the conduit 130'. The temperature of the conduit 130' and hence the voltage appearing across the RTD 190 for a given current passing therethrough is governed by the temperature of the material passing through the conduit 130'. The temperature dependent voltage appearing across the RTD 190 is used in a well-known method by the meter electronics 20 to compensate for the change in elastic modulus of the conduits 130, 130' due to any changes in conduit temperature. The RTD 190 is connected to the meter electronics 20 by lead 195.

Both of the conduits 130, 130' are driven by driver 180 in opposite directions about their respective bending axes W and W' and at what is termed the first out-of-phase bending mode of the flow meter. This driver 180 may comprise any one of many well-known arrangements, such as a magnet mounted to the conduit 130' and an opposing coil mounted to the conduit 130 and through which an alternating current is passed for vibrating both conduits 130, 130'. A suitable drive signal is applied by the meter electronics 20, via lead 185, to the driver 180.

The meter electronics 20 receives the RTD temperature signal on lead 195, and the left and right sensor signals appearing on leads 100 carrying the left and right sensor signals 165l, 165r, respectively. The meter electronics 20 produces the drive signal

appearing on lead 185 to driver 180 and vibrate conduits 130, 130'. The meter electronics 20 processes the left and right sensor signals and the RTD signal to compute the mass flow rate and the density of the material passing through meter assembly 10. This information, along with other information, is applied by meter electronics 20 over path 26 as a signal.

A mass flow rate measurement $\dot{m}$ can be generated according to the equation:

$$\dot{m} = FCF[\Delta t - \Delta t_0] \qquad [1]$$

The Δt term comprises an operationally-derived (*i.e.*, measured) time delay value comprising the time delay existing between the pick-off sensor signals, such as where the time delay is due to Coriolis effects related to mass flow rate through the vibratory meter 5. The measured Δt term ultimately determines the mass flow rate of the flow material as it flows through the vibratory meter 5. The Δt_0 term comprises a time delay at zero flow calibration constant. The Δt_0 term is typically determined at the factory and programmed into the vibratory meter 5. The time delay at zero flow Δt_0 term will not change, even where flow conditions are changing. The flow calibration factor *FCF* is proportional to the stiffness of the vibratory meter 5.

Pressures in a fluid in a vibratory meter

Assuming an incompressible liquid under steady conditions, the rate at which mass enters a control volume (e.g., a pipe) at an inlet ($\dot{m}_1$) equals the rate at which it leaves at an outlet ($\dot{m}_3$). This principle that the inlet mass flow rate ($\dot{m}_1$) must be equal to the outlet mass flow rate ($\dot{m}_3$) is illustrated by equation [2] below. Moving from the inlet to the outlet, the mass flow rate is conserved at each point along the pipe. However, there may be a reduction in a flow area midway between the inlet and the outlet. This reduction in the flow area requires that the velocity of the fluid increase ($v\uparrow$) to maintain the same mass flow rate and obey conservation of mass principles.

$$\dot{m}_1 = \rho_1 v_1 A_1 = \rho_2 v_2 A_2 = \dot{m}_2 = \dot{m}_3; \qquad [2]$$

where:

$\dot{m}$ is a mass flow rate of the fluid;

v is an average fluid velocity;

ρ is a density of the fluid;

A is a total cross-sectional area;

subscript 1 indicates the inlet;

subscript 3 indicates the outlet; and

subscript 2 indicates midway between the inlet and the outlet.

Additionally, the total pressure in a flow system is equal to the sum of both the dynamic pressure and the static pressure:

$$P_{total} = P_{static} + P_{dynamic}. \quad [3]$$

The dynamic pressure $P_{dynamic}$ may be defined as:

$$P_{dynamic} = \frac{\rho v^2}{2}; \quad [4]$$

where the terms ρ and v are defined above with respect to equation [2].

Assuming steady, incompressible, inviscid, irrotational flow, the Bernoulli equation gives:

$$Constant = \frac{\rho v^2}{2} + \rho g z + P; \quad [5]$$

Where P refers to the static pressure and the $\rho g z$ term accounts for hydrostatic head due to elevation changes. More specifically, g is a gravitational constant and z is a height. The viscous portion of pressure drop can be handled with a separate loss term in the Bernoulli equation.

$$\Delta P_{viscous} = -\frac{\rho v^2}{2}\frac{fL}{D}; \quad [6]$$

where;

f is a friction factor;

L is a length of a pipe; and

D is a diameter of the pipe.

The below equation [7] is a version of the Bernoulli equation that accounts for frictional losses associated with traveling through a pipe. As fluid travels through the pipe, the fluid dissipates energy and the pressure drops across a given length of pipe. This loss in pressure is unrecoverable because energy from the fluid has been consumed through frictional losses. Accordingly, the following equation may account for this loss:

$$P_1 + \frac{\rho v_1^2}{2} + \rho g z_1 + \Delta P_{viscous} = P_2 + \frac{\rho v_2^2}{2} + \rho g z_2 \qquad [7]$$

This relationship can be applied to the exemplary pipe described above with reference to equation [2]. When the fluid moves from the inlet to midway between the inlet and the outlet, there is a change in velocity to conserve the mass flow rate. Therefore, in maintaining the relationship shown in equation [7], the dynamic pressure $\frac{\rho v^2}{2}$ increases, causing the static pressure to decrease. As the fluid moves to the outlet from midway between the inlet and outlet, the static pressure is recovered through the same principles. That is, moving to the outlet from midway between the inlet and the outlet, the flow area is increased; therefore, the fluid velocity is decreased, causing the dynamic pressure to decrease while recovering part of the initial static pressure. However, the static pressure at the outlet will be lower due to unrecoverable viscous losses.

This can cause the static pressures at the inlet and outlet to be greater than a vapor pressure of the fluid, while a static pressure between the inlet and outlet is less than the vapor pressure of the fluid. As a result, although the static pressures at the inlet and the outlet are both greater than the vapor pressure of the fluid, flashing or outgassing may still occur in the pipe. Additionally, a vibratory meter, such as a Coriolis meter, may be inserted into a pipeline that has a diameter that is different than a diameter of a conduit or conduits in the vibratory meter. As a result, when outgassing is

detected in the vibratory meter, the pressure measured in the pipeline may not be a vapor pressure of the fluid in the vibratory meter.

Meter electronics – drive gain

FIG. 2 is a block diagram of the meter electronics 20 of vibratory meter 5. In operation, the vibratory meter 5 provides various measurement values that may be outputted including one or more of a measured or averaged value of mass flow rate, volume flow rate, individual flow component mass and volume flow rates, and total flow rate, including, for example, both volume and mass flow of individual flow components.

The vibratory meter 5 generates a vibrational response. The vibrational response is received and processed by the meter electronics 20 to generate one or more fluid measurement values. The values can be monitored, recorded, saved, totaled, and/or output. The meter electronics 20 includes an interface 201, a processing system 203 in communication with the interface 201, and a storage system 204 in communication with the processing system 203. Although these components are shown as distinct blocks, it should be understood that the meter electronics 20 can be comprised of various combinations of integrated and/or discrete components.

The interface 201 is configured to communicate with the meter assembly 10 of the vibratory meter 5. The interface 201 may be configured to couple to the leads 100 (see FIG. 1) and exchange signals with the driver 180, pickoff sensors 170l and 170r, and RTDs 190, for example. The interface 201 may be further configured to communicate over the communication path 26, such as to external devices.

The processing system 203 can comprise any manner of processing system. The processing system 203 is configured to retrieve and execute stored routines in order to operate the vibratory meter 5. The storage system 204 can store routines including a flowmeter routine 205, a valve control routine 211, a drive gain routine 213, and a vapor pressure routine 215. The storage system 204 can store measurements, received values, working values, and other information. In some embodiments, the storage system stores a mass flow (m) 221, a density (ρ) 225, a density threshold 226, a viscosity (μ) 223, a temperature (T) 224, a pressure 209, a drive gain 306, a drive gain threshold 302, a gas entrainment threshold 244, a gas entrainment fraction 248, and any other variables known in the art. The routines 205, 211, 213, 215 may comprise any signal noted and

those other variables known in the art. Other measurement/processing routines are contemplated and are within the scope of the description and claims.

As can be appreciated, more or fewer values may be stored in the storage system 204. For example, a vapor pressure may be determined without using the viscosity 223. For example, estimate viscosity based on a pressure drop, or a function relating friction as a function of flow rate. However, the viscosity 223 may be used to calculate a Reynolds number which can then be used to determine a friction factor. The Reynolds number and friction factor can be employed to determine a viscous pressure drop in a conduit, such as the conduits 130, 130' described above with reference to FIG. 1. As can be appreciated, the Reynolds number may not necessarily be employed.

The flowmeter routine 205 can produce and store fluid quantifications and flow measurements. These values can comprise substantially instantaneous measurement values or can comprise totalized or accumulated values. For example, the flowmeter routine 205 can generate mass flow measurements and store them in the mass flow 221 storage of the storage system 204, for example. The flowmeter routine 205 can generate density 225 measurements and store them in the density 225 storage, for example. The mass flow 221 and density 225 values are determined from the vibrational response, as previously discussed and as known in the art. The mass flow and other measurements can comprise a substantially instantaneous value, can comprise a sample, can comprise an averaged value over a time interval, or can comprise an accumulated value over a time interval. The time interval may be chosen to correspond to a block of time during which certain fluid conditions are detected, for example a liquid-only fluid state, or alternatively, a fluid state including liquids and entrained gas. In addition, other mass and volume flow and related quantifications are contemplated and are within the scope of the description and claims.

A drive gain threshold 302 may be used to distinguish between periods of flow, no flow, a monophasic/biphasic boundary (where a fluid phase change occurs), and gas entrainment/mixed-phase flow. Similarly, a density threshold 226 applied to the density reading 225 may also be used, separately or together with the drive gain, to distinguish gas entrainment/mixed-phase flow. Drive gain 306 may be utilized as a metric for the sensitivity of the vibratory meter's 5 conduit vibration to the presence of fluids of disparate densities, such as liquid and gas phases, for example, without limitation.

As used herein, the term drive gain refers to a measure of the amount of power needed to drive the flow tubes to specified amplitude, although any suitable definition may be employed. For example, the term drive gain may, in some embodiments, refer to drive current, pickoff voltage, or any signal measured or derived that indicates the amount of power needed to drive the flow conduits 130, 130' at a particular amplitude. The drive gain may be used to detect multi-phase flow by utilizing characteristics of the drive gain, such as, for example, noise levels, standard deviation of signals, damping-related measurements, and any other means known in the art to detect mixed-phase flow. These metrics may be compared across the pick-off sensors 170l and 170r to detect a mixed-phase flow.

Detecting a phase change of a fluid

FIG. 3 shows a graph 300 illustrating a relationship between a drive gain and a gas-liquid ratio that can be used to determine a vapor pressure using a vapor pressure meter factor. As shown in FIG. 3, the graph 300 includes an average void fraction axis 310 and a drive gain axis 320. The average void fraction axis 310 and the drive gain axis 320 are incremented in percentages, although any suitable units and/or ratios may be employed.

The graph 300 includes plots 330 that are relationships between drive gains and gas-liquid ratios for various flow rates. As shown, the gas-liquid ratio is an average void fraction value of the plots 330, although any suitable gas-liquid ratio, such as a gas volume fraction ("GVF") or a gas entrainment fraction, may be employed, and may be based on volume, cross-sectional area, or the like. As can be appreciated, the plots 330 are similar despite being associated with different flow rates. Also shown is a drive gain threshold line 340 that intersects with the plots 330 at about 0.20 percent average void fraction, which may be a reference average void fraction 330a that corresponds to a 40% drive gain. Also shown is a true vapor pressure drive gain 332, which is about 10%. The true vapor pressure drive gain 332 corresponds to the fluid in the meter assembly that has a static pressure at which a fluid phase change occurs and has a gas-liquid ratio of zero.

As can be seen, the plots 330 vary from a drive gain of about 10 percent to drive gain of about 100 percent over a range of average void fractions from 0.00 percent to about 0.60 percent. As can be appreciated, a relatively small change in the average void

fraction results in a significant change in the drive gain. This relatively small change can ensure that the onset of vapor formation can be accurately detected with the drive gain.

Although the drive gain of 40% is shown as corresponding to an average void fraction of 0.20 percent, the correspondence may be specific to a process. For example, the drive gain of 40% may correspond to other average void fractions in other process fluids and conditions. Different fluids may have different vapor pressures and therefore onset of vapor formation for the fluids may occur at different flow rates. That is, a fluid with a relatively low vapor pressure will vaporize at higher flow rates and a fluid with relatively high vapor pressure may vaporize at lower flow rates.

As can also be appreciated, the drive gain threshold line 340 may be at alternative/other drive gains. However, it may be beneficial to have the drive gain at 40% to eliminate false detections of entrainment/mixed phase flow while also ensuring that the onset of vapor formation is correctly detected.

Also, the plots 330 employ a drive gain, but other signals may be used, such as a measured density, or the like. The measured density may increase or decrease due to the presence of voids in the fluid. For example, the measured density may, counterintuitively, increase due to voids in relatively high frequency vibratory meters because of a velocity-of-sound effect. In relatively low frequency meters, the measured density may decrease due to the density of the voids being less than the fluid. These and other signals may be used alone or in combination to detect the presence of the vapor in the meter assembly.

As discussed above, the 0.20 percent average void fraction value may be the reference average void fraction 330a that corresponds to the 40 percent drive gain value, which may be where the drive gain threshold line 340 intersects with the drive gain axis 320. Accordingly, when a measured drive gain is at 40 percent for a fluid in a meter assembly, such as the meter assembly 10 described above, then an average void fraction of the fluid may be about 0.20 percent. The void fraction of about 0.20 percent may correspond to a pressure of the fluid due to gas present in the fluid. For example, the void fraction of about 0.20 percent may correspond to, for example, a static pressure value.

Due to the previously determined relationship between the drive gain, or other signal, such as density, and the reference average void fraction 330a, which may be a

reference gas-liquid ratio, a vapor pressure value may be associated with a vapor pressure meter factor. For example, the meter assembly may be vibrated while a static pressure is increased or decreased until a fluid phase change is detected. A vapor pressure value may then be determined from the static pressure, as will be described in more detail in the following with reference to FIG. 4. The determined vapor pressure value may correspond to, for example, the static pressure at the drive gain threshold line 340. This determined vapor pressure value may be adjusted by the vapor pressure meter factor to correspond to the true vapor pressure drive gain 332, which is where a phase change occurs, or the monophasic/biphasic boundary is encountered. Accordingly, although the presence of gas in the fluid may be detected at a static pressure that is different than the true vapor pressure of the fluid, the true vapor pressure value may nevertheless be determined.

Using the reference average void fraction 330a as an example, the static pressure in the meter assembly may be reduced until the drive gain reaches 40 percent, thereby indicating that the fluid in the meter assembly has an average void fraction of 0.20 percent. A processing system, such as the processing system 203 described above, may determine that the fluid began to vaporize at a static pressure that is, for example, proportionally higher than the static pressure corresponding to the 40 percent drive gain. For example, a true vapor pressure value may be associated with a drive gain of about 10%. As can be appreciated, due to uncertainties involved in calculating the static pressure (e.g., errors from a pressure sensor, flow rate measurement errors, etc.) a true vapor pressure may be proportionally lower than the calculated static pressure that is associated with the 40% drive gain. True vapor pressure corresponds to a static pressure of the fluid where a fluid phase change occurs, but the gas-liquid ratio is zero.

Thus, the measured drive gain can be used to detect gas, yet still may result in a highly accurate true vapor pressure value. With more particularity, at the instant that outgassing first occurs, with a few tiny bubbles present, drive gain may not increase past the drive gain threshold line 340 for detection. A dynamic pressure may be increased by, for example, a pump that continues to increase a flow rate until the static pressure drops such that drive gain passes the drive gain threshold line 340. Depending on the application, this calculated static pressure (e.g., an uncorrected vapor pressure) could be corrected (e.g., adjusted – decreased or increased) by a vapor pressure meter factor of,

for example, 1 psi, to account for the delay in detecting the fluid phase change. That is, the vapor pressure meter factor could be determined and applied to the uncorrected vapor pressure measurement as a function of drive gain to account for the difference in the drive gain at which the gas is detected and the true vapor pressure so as to detect tiny amounts of gas.

Referring to FIG. 3 by way of example, the measured drive gain of 40 percent may correspond to a static pressure of the fluid in the meter assembly that is, for example, 1 psi less than a static pressure corresponding to the drive gain associated with the true vapor pressure. Accordingly, the vibratory meter 5, or meter electronics 20, or any suitable electronics, can determine that the vapor pressure meter factor is 1 psi and add this value from the static pressure associated with the 40 percent drive gain. As a result, the vibratory meter 5 may accurately detect the phase change of the fluid and, therefore, also accurately determine a vapor pressure of the fluid using the drive gain.

However, other means of detecting the phase change may be employed that do not use a drive gain. For example, the phase change may be detected by acoustic measurement, x-ray-based measurements, optical measurements, etc. Also, combinations of the above implementations could be considered. For example, a bypass line that extends vertically in a loop with acoustic and/or optical measurements distributed vertically to determine where the gas first outgasses. This height would then provide the needed input to calculate a vapor pressure of the fluid in the vibratory meter 5, as the following explains.

Pressure drop in a vibratory meter

FIG. 4 shows a graph 400 illustrating how a static pressure of a fluid in a vibratory meter may be used to determine a vapor pressure. As shown in FIG. 4, graph 400 includes a position axis 410 and a static pressure axis 420. The position axis 410 is not shown with any particular units of length, but could be in units of inches, although any suitable unit may be employed. The static pressure axis 420 is in units of pounds-per-square inch (psi), although any suitable unit may be employed. The position axis 410 ranges from an inlet ("IN") to an outlet ("OUT") of the vibratory meter.

Accordingly, the position from IN to OUT may correspond to fluid in, for example, the meter assembly 10 shown in FIG. 1. In this example, the region from IN to about A may correspond to a portion of the meter assembly 10 between the flange 103

to the conduit mounting block 120. The region from about A to about G may correspond to the conduits 130, 130' between the mounting blocks 120, 120'. The region from G to OUT may correspond to the portion of the meter assembly 10 from the mounting block 120' to the flange 103'. Accordingly, the fluid in the meter assembly 10 (e.g., in the position ranging from IN to OUT) may not include fluid in, for example, the pipeline in which the meter assembly 10 is inserted. The fluid in the meter assembly 10 may be the fluid in the conduits 130, 130'.

The graph 400 also includes a zero dynamic pressure plot 430 and a dynamic pressure change plot 440. The zero dynamic pressure plot 430 shows no change in the dynamic pressure – the pressure is assumed to decrease linearly from an inlet to an outlet of a vibratory meter. The dynamic pressure change plot 440 may represent an actual pressure in the vibratory meter inserted into the pipeline wherein the diameter of the conduit or conduits of the vibratory meter is less than the diameter of the pipeline. An exemplary vibratory meter 5 is shown in FIG. 1, although any suitable vibratory meter may be employed. Accordingly, the fluid in the meter assembly, such as the meter assembly 10 described above, may have a reduced static pressure due to an increase in dynamic pressure. Also shown is a vapor pressure line 450 representing a vapor pressure of the fluid in the vibratory meter.

The dynamic pressure change plot 440 includes a static pressure drop section 440a, a viscous loss section 440b, and a static pressure increase section 440c. The dynamic pressure change plot 440 also includes a minimum static pressure 440d. The static pressure drop section 440a may be due to an increase in fluid velocity causing a corresponding increase in the dynamic pressure of this section of the vibratory meter. The viscous loss section 440b may correspond to a constant diameter portion of the conduit or conduits in the vibratory meter. Accordingly, the viscous loss section 440b may not reflect an increase in fluid velocity and, therefore, may not reflect an increase in a dynamic pressure. The static pressure increase section 440c may be due to a decrease in fluid velocity and, therefore, the static pressure decrease during the static pressure drop section 440a may be recovered. The static pressure drop section 440a and the static pressure increase section 440c may be static pressure changes in the meter assembly.

The portion of the dynamic pressure change plot 440 lying below the vapor pressure line 450, which includes the minimum static pressure 440d, may correspond to

positions (e.g., from about position E to slightly after position G) where a fluid phase change occurs in a fluid in a meter assembly, such as the meter assembly 10 described above. As can be seen in FIG. 4, the minimum static pressure 440d is below the vapor pressure line 450. This indicates that the dynamic pressure change plot 440 may be shifted upwards by increasing the static pressure of the fluid in the meter assembly. However, if the static pressure were to be increased by about 5 psi so as to shift the dynamic pressure change plot 440 up until the minimum static pressure 440d lies on the vapor pressure line 450, a fluid phase change may be detected. Because the static pressure is increased, gas or vapor in the fluid in the meter assembly may become a liquid. Conversely, if the dynamic pressure change plot 440 were above the vapor pressure line 450 and the static pressure of the fluid in the meter assembly were decreased until the minimum static pressure 440d lies on the vapor pressure line, then the fluid phase change may be the formation of gas or vapor in the fluid.

As can be seen in FIG. 4, the viscous loss section 440b decreases from a static pressure of about 68 psi at position A to a static pressure of about 55 psi at position G. As can be appreciated, the static pressure of about 55 psi at the position G is less than the vapor pressure line 450, which is about 58 psi. As a result, even though the static pressures at the inlet and outlet are greater than the vapor pressure line 450, the fluid in the vibratory meter may still flash or outgas.

Accordingly, the static pressure at the inlet and outlet do not directly correspond to the vapor pressure of the fluid. In other words, the vapor pressure of the fluid may not be directly determined from a static pressure of the fluid in the pipeline or external of the meter assembly. The static pressure in the meter assembly 10 or, more specifically, the conduits 130, 130', can be accurately determined by, for example, using the pressure measurements at the inlet and the outlet and inputting the dimensions of the vibratory meter 5 (e.g., diameter and length of the conduit 130, 130'). However, to accurately determine the vapor pressure, a phase change in the fluid in the vibratory meter 5 may need to be induced, which may be caused by varying the static pressure of the fluid in the vibratory meter 5.

Varying a static pressure of a fluid

FIG. 5 shows a system 500 for determining a vapor pressure of a fluid. As shown in FIG. 5, the system 500 is a bypass that includes a bypass inlet and a bypass

outlet that are coupled to a pipeline 501. The system 500 includes a pump 510 in fluid communication with an outlet of a vibratory meter 5, illustrated as a Coriolis meter, and the bypass outlet. An inlet pressure sensor 520 is in fluid communication with an inlet of the vibratory meter 5 and the bypass inlet. An outlet pressure sensor 530 is disposed between the outlet of the vibratory meter 5 and the pump 510 and is configured to measure a static pressure of the fluid at the outlet of the vibratory meter 5. A flow control device 540, which is shown as a valve, is disposed between the bypass inlet and the inlet pressure sensor 520.

The pump 510 may be any suitable pump that can, for example, increase a velocity of the fluid in the vibratory meter 5. The pump 510 may, for example, include a variable frequency drive. The variable frequency drive may allow the pump 510 to control a fluid velocity of the fluid in the system 500. For example, the variable frequency drive may increase the fluid velocity of the fluid through the vibratory meter 5, although the fluid velocity may be increased by any suitable pump. By increasing the fluid velocity, the pump 510 can increase a dynamic pressure of the fluid in the vibratory meter 5 by increasing the fluid velocity.

Accordingly, the static pressure of the fluid in the vibratory meter 5 may decrease. By way of illustration, with reference to FIG. 4, the pump 510 may cause the dynamic pressure change plot 440 to shift downward. Accordingly, although not shown in FIG. 4, should the dynamic pressure change plot 440 be above the vapor pressure line 450, the pump 510 may induce flashing or outgassing by causing the dynamic pressure change plot 440 to shift downward. Similarly, by shifting the dynamic pressure change plot 440 up to or above the vapor pressure line 450, gas or vapor in the fluid may become a liquid.

The inlet pressure sensor 520 and the outlet pressure sensor 530 may be any suitable pressure sensor configured to measure any pressure of the fluid. For example, the inlet pressure sensor 520 and the outlet pressure sensor 530 may measure a static pressure of the fluid in the system 500. Additionally, or alternatively, the inlet pressure sensor 520 and the outlet pressure sensor 530 may measure a total pressure of the fluid in the system 500. In one example, a dynamic pressure of the fluid may be determined by taking a difference between the total pressure and the static pressure of the fluid in the system 500 according to equation [3] above. For example, the inlet pressure sensor

520 may measure the total pressure and the static pressure of the fluid proximate to, or at, an inlet of the vibratory meter 5. The inlet pressure sensor 520 and/or the meter electronics 20 in the vibratory meter 5 may determine the dynamic pressure at the inlet of the vibratory meter 5.

The flow control device 540 may increase the fluid velocity of the fluid in the system 500 when the flow control device 540's position is moved from a partially closed position to a fully open position. For example, by decreasing flow restriction of the system 500 at the inlet of the vibratory meter 5, the velocity of the fluid may increase in accordance with equation [2] above. This can shift the dynamic pressure change plot 440 down so as to induce flashing or outgassing. Conversely, the flow control device 540 can reduce the fluid velocity of the fluid in the system 500 thereby shifting the dynamic pressure change plot 440 up, thereby causing gas or vapors to condense.

As the flow control device 540 is opened, the fluid velocity will increase, but so will a static pressure at the vibratory meter 5 inlet, and vice versa. The combination of the flow control device 540 with the pump 510 may provide a preferred process condition by partially closing the flow control device 540 (e.g., to restrict a flow and lower pressure downstream of the flow control device 540) and increasing pump speed (e.g., increasing flow rate) to obtain a desirably lower static pressure and higher velocity.

Although the static pressure of the fluid in the vibratory meter 5, or, more particularly, the meter assembly 10 in the vibratory meter 5, may be varied by using the pump 510 or the flow control device 540, or a combination of both, described above, other means of varying the static pressure may be employed. For example, a height z of the vibratory meter 5 may be varied. To reduce the static pressure of the fluid in the vibratory meter 5, the height z may be increased. To increase the static pressure of the fluid in the vibratory meter 5, the height z may be decreased. The height z of the vibratory meter 5 may be varied by any suitable means, such as a motorized lift between the vibratory meter 5 and the pipeline 501 and bellows between the vibratory meter 5, for example, the flow control device 540 and the pump 510. Other means may be employed, as well as a combination of various means (e.g., the pump 510, flow control device 540, and/or the motorized lift).

For example, if the flow rate through a bypass is sufficient, a pump may not necessarily be employed. Only the flow control device 540 may be used. The flow control device 540 may be installed in other locations, such as downstream of the vibratory meter 5. Alternatively, the flow control device 540 may not be employed, such as where the pump 510 and/or motorized lift is used. In another alternative example, the meter may be installed in the main line, rather than a bypass. Additionally, or alternatively, only a single pressure sensor may be employed. For example, only the outlet pressure sensor 530 may be employed. The inlet and/or outlet pressure sensors 520, 530 may be located at alternative locations. The outlet pressure sensor 530 and its location may be beneficial because the static pressure at the location of the outlet pressure sensor 530 may substantially stabilize with respect to fluid velocity once the fluid in the meter assembly 10 is at the vapor pressure. That is, any additional increase in the fluid velocity may not cause a substantial decrease in the static pressure measured by the outlet pressure sensor 530.

Additional information can be inferred from the vapor pressure measurement. For example, if the flowing liquid is a mixture of two or more pure substances, the vapor pressure can be used to estimate liquid phase concentrations of the pure components (i.e. component volume or mass fractions) using Dalton's and Raoult's Laws. Correlations for standard hydrocarbons or other fluids could be put in the transmitter and added as a feature, similar to current concentration measurement curves. Additionally, the concentration of salt, or other non-volatile solutions can be determined. These concepts are explained in the following:

Dalton's law of additive pressures, as expressed in equation [8], states that the total pressure exerted by a mixture of gases, P_m, is equal to the sum of the pressures exerted by each component of the mixture, P_i, if each component existed separately at the same temperature and volume as the mixture.

$$P_m = \sum_{i=1}^{k} P_i \qquad [8]$$

At the low pressures expected in the system 500 shown in FIG. 5, the behavior of the gases can be assumed to approach ideal gas behavior where Dalton's law best predicts the behavior of gas mixtures.

Raoult's law, as expressed in equation [9], states that the partial pressure of each component, P_i, of an ideal mixture of liquids is equal to the vapor pressure of the pure

component, P_i^*, multiplied by its mole fraction in the liquid mixture or two-component fluid, x_i.

$$P_m = P_i^* x_i \qquad [9]$$

Using the above equations and reference vapor pressure tables for pure components, the liquid concentrations for an ideal binary or two-component fluid can be obtained:

$$P_m = P_1^* x_1 + P_2^* x_2, \qquad [10]$$

where:

P_m, is the sum of the pressures exerted by each component of the mixture and may be equal to a vapor pressure of the multi-component fluid, such as a binary or two-component fluid; and

$P_1^* x_1$, $P_2^* x_2$ are respective partial pressures of the first and second component in the two-component fluid.

As can be appreciated, due to the multi-component fluid being a binary or two-component fluid, the first mole fraction x_1 is equal to unity minus the second mole fraction x_2: $1 - x_2$. The following example illustrates the use of the measured vapor pressure to determine the liquid concentrations of a binary mixture.

A liquid mixture of Benzene (B) and Toluene (T) flows through a process pipeline at 95 °C. A portion of the liquid flows through a bypass line where the vapor pressure will be determined using a system like the one proposed in this disclosure. The static pressure in the bypass system drops until the Coriolis meter detects the formation of gas bubbles. The measured vapor pressure at this point is 101.32 kPa. The following illustrates how to determine the liquid concentration of each component.

A first step may be to find the vapor pressure of the pure components at 95 °C. This info can be found in the literature: $P_B^* = 155.7\ kPa;\quad P_T^* = 63.3\ kPa$. The next step is to use Dalton's and Raoult's laws to relate the measured vapor pressure to liquid concentrations:

$$101.32\ kPa = P_B + P_T = P_B^* x_B + P_T^* x_T = P_B^* x_B + P_T^*(1 - x_B) = 155.7\ x_B + 63.3\ (1 - x_B).$$

Using a simple root finder, the mole fraction for Benzene can be solved for: $x_B = 0.411$. Since $x_B + x_T = 1$ it follows that $x_T = 0.589$.

Using density

The density measurement and the vapor pressure measurement can be combined to result in more equations and therefore be able to solve for more unknown components. Normally, if base densities of the pure compounds are known as a function of temperature, then the concentration software can accurately determine the volume fraction of up to two components. However, with the addition of the vapor pressure information described above, three components can be differentiated, with component volume or mass fractions of each provided.

Allowing for determination of liquid fraction of three component mixtures may increase the usable range of a concentration measurement or net oil computer. The additional equations needed for three components are defined below, where φ refers to the volume fraction of each component and ρ is the density of each component, along with the measured density.

$$\varphi_1 + \varphi_2 + \varphi_3 = 1 \qquad [11]$$

$$\rho_1\varphi_1 + \rho_2\varphi_2 + \rho_3\varphi_3 = \rho_{measured} \qquad [12]$$

By way of example, the following equation shows how the above Dalton's and Raoult's laws can be used to determine a concentration of at least one component in a multi-component fluid, the multi-component fluid being a three-component fluid.

$$P = P_1^* x_1 + P_2^* x_2 + P_3^* x_3; \qquad [13]$$

where:

P is a vapor pressure of the three-component fluid, which may be measured by a transducer;

$x_1, x_2,$ and x_3 are mole fractions of the three components of the three-component fluid; and

$P_1^*, P_2^*,$ and P_3^* are vapor pressures of each of the components as a pure fluid; which may be known, for example, from a look-up table.

The mole fractions of the three components $x_1,\ x_2,\ x_3$ may necessarily add up to one:

$$x_1 + x_2 + x_3 = 1. \quad [14]$$

In addition, the mole fractions of the three components x_1, x_2, x_3 respectively multiplied by their molecular weight must sum to the molecular weight of the three-component fluid:

$$MW_{mix} = x_1 MW_1 + x_2 MW_2 + x_3 MW_3; \quad [15]$$

where:

MW_{mix} is a molecular weight of the three-component fluid; and

MW_1, MW_2, and MW_3 are molecular weights of each of the components in the three-component fluid.

Additionally, an inverse of the density of the three-component fluid may be equal to a sum of ratios of a mass fraction and a density of each of the components in the three-component fluid:

$$\frac{1}{\rho_T} = \frac{w_1}{\rho_1} + \frac{w_2}{\rho_2} + \frac{w_3}{\rho_3}; \quad [16]$$

where:

w_1, w_2, and w_3 are respective mass fractions of a first, second, and third component in the three-component fluid and are respectively equal to $x_1 MW_1/MW_{mix}$, $x_2 MW_2/MW_{mix}$, and $x_3 MW_3/MW_{mix}$;

ρ_1, ρ_2, ρ_3 are respectively densities of the first, second, and third component of the three-component fluid; and

ρ_T is a density of the three-component fluid, which may be equal to the measured density $\rho_{measured}$.

As can be appreciated, there are seven equations and seven unknowns and therefore, the concentrations of each component may be determined.

Even in mixtures with only two components, the vapor pressure measurement of the binary mixture can be used by itself to calculate the component fractions of the mixture; this would be particularly useful in cases where the densities of the pure components are equal, but their vapor pressures are different. Alternatively, the vapor

pressure of a binary mixture could be used to provide a secondary check for the density-based algorithms, even when the densities of the pure components are different.

Using a vapor pressure

FIG. 6 shows a method 600 of using a vapor pressure to determine a concentration of a component in a multi-component fluid. As shown in FIG. 6, in step 610, the method 600 determines a first vapor pressure. The first vapor pressure is a vapor pressure of a first component of the multi-component fluid. In step 620, the method determines a second vapor pressure. The second vapor pressure is a vapor pressure of a second component of the multi-component fluid. In step 630, the method determines a multi-component vapor pressure. The multi-component vapor pressure is a vapor pressure of the multi-component fluid. The multi-component vapor pressure of the multi-component fluid may be a sum of the pressures exerted by each component in the multi-component fluid. The method 600, in step 640, determines a concentration of at least one of the first component and the second component based on the multi-component vapor pressure, the first vapor pressure, and the second vapor pressure.

In step 640, the method 600 can determine the concentration of the first or the second component based on the multi-component vapor pressure, the first vapor pressure, and the second vapor pressure using above equation [10] as well as a mole fraction relationship of $x_1 + x_2 = 1$. For a three-component fluid, the method 600 can determine the concentration of the first component, second component, and/or third component by using equations [13]-[16] above.

The method 600 may also include additional steps. For example, the method 600 may determine a density of the multi-component fluid in the transducer based on sensor signals provided by the transducer. For example, the density may be determined by measuring a frequency, such as a resonant frequency, of the transducer and using a correlation between the frequency and a density value to determine the density of the multi-component fluid. The method 600 may also further determine a true vapor pressure of the multi-component fluid based on a static pressure of the multi-component fluid in the transducer. The vapor pressure may be determined based on a gain of the drive signal provided to the transducer. The transducer may be the meter assembly of a vibratory meter, although any suitable transducer may be employed, as the following explains.

FIG. 7 shows a system 700 for using a vapor pressure to determine a concentration of a multi-component fluid. As shown in FIG. 7, the system 700 is comprised of an electronics 710 and a transducer 720. The electronics 710 may be configured to determine a vapor pressure of a multi-component fluid. For example, the electronics 710 may be configured to determine a first and a second vapor pressure, the first and second vapor pressure being vapor pressures respectively of a first component and a second component of the multi-component fluid. The electronics 710 may also be configured to determine a multi-component vapor pressure, where the multi-component vapor pressure is a vapor pressure of the multi-component fluid. The electronics 710 can use the vapor pressures to determine a concentration of the multi-component fluid. For example, the electronics 710 may be configured to determine a concentration of at least one of the first component and the second component based on the multi-component vapor pressure, the first vapor pressure, and the second vapor pressure.

The electronics 710 may also be configured to determine a density of the multi-component fluid. The density of the multi-component fluid may be equal to the sum of each density multiplied by the volume fraction of each component. For example, for a three-component fluid, the density of the three-component fluid may be equal to the sum of products of a respective density and volume fraction of the components in the three-component fluid. The inverse of the density of the multi-component fluid may be equal to a sum of respective mass fractions and densities of components in a multi-component fluid. For example, for a three-component fluid, the inverse of the density may be determined according to above equation [16].

The above describes the vibratory meter 5, in particular the meter electronics 20, and method 600, and system 700 using a vapor pressure to determine a concentration of a component in a multi-component fluid. The concentration of the component may be determined using measurements provided by only the vibratory meter 5, although additional measurements may be made, such as the static pressure measurements described with reference to FIG. 5. As a result, information provided by the meter electronics 20 may include not only mass flow rates and density, but also concentrations of components in the multi-component fluid. The field of vibratory meters is improved because measurement capabilities of the vibratory meters are improved. Fields that employ vibratory meters are also improved because the number of measurement devices

required to obtain the concentrations of components in a multi-component fluid may be reduced, thereby saving costs. In addition, the information may be provided in real time and in situ thereby ensuring that the data accurately represents the multi-component fluid being measured.

The detailed descriptions of the above embodiments are not exhaustive descriptions of all embodiments contemplated by the inventors to be within the scope of the present description. Indeed, persons skilled in the art will recognize that certain elements of the above-described embodiments may variously be combined or eliminated to create further embodiments, and such further embodiments fall within the scope and teachings of the present description. It will also be apparent to those of ordinary skill in the art that the above-described embodiments may be combined in whole or in part to create additional embodiments within the scope and teachings of the present description.

Thus, although specific embodiments are described herein for illustrative purposes, various equivalent modifications are possible within the scope of the present description, as those skilled in the relevant art will recognize. The teachings provided herein can be applied to other methods, electronics, systems, or the like for using vapor pressure to determine concentrations of components in a multi-component fluid and not just to the embodiments described above and shown in the accompanying figures. Accordingly, the scope of the embodiments described above should be determined from the following claims.

We claim:

1. A system for using a vapor pressure to determine a concentration of a component in a multi-component fluid, the system comprising:

an electronics communicatively coupled to a transducer configured to sense a multi-component fluid, the electronics being configured to:

determine a first vapor pressure, the first vapor pressure being a vapor pressure of a first component of the multi-component fluid;

determine a second vapor pressure, the second vapor pressure being a vapor pressure of a second component of the multi-component fluid;

determine a multi-component vapor pressure, the multi-component vapor pressure being a vapor pressure of the multi-component fluid, based on a gain of a drive signal provided to the transducer; and

determine a concentration of at least one of the first component and the second component based on the multi-component vapor pressure, the first vapor pressure, and the second vapor pressure.

2. The system of claim 1, wherein the electronics being configured to determine the concentration of at least one of the first component and the second component based on the multi-component vapor pressure, the first vapor pressure, and the second vapor pressure comprises the electronics being configured to use equations:

$$P_m = P_1^* x_1 + P_2^* x_2; \text{ and}$$

$$x_1 + x_2 = 1;$$

where:

P_m is the multi-component vapor pressure and is a sum of the pressures exerted by each component of the multi-component fluid being a two-component fluid;

P_1^*, P_2^* are respectively the first vapor pressure and the second vapor pressure when the first component and the second component are pure fluids; and

x_1, x_2 are respectively mole fractions of the first and second component in the two-component fluid.

3. The system of claim 1, wherein the electronics being configured to determine a concentration of at least one of the first component and the second component based on the multi-component vapor pressure, the first vapor pressure, and the second vapor pressure comprises the electronics being configured to determine the concentrations of the first component, the second component, and a third component using equations:

$$P_m = P_1^* x_1 + P_2^* x_2 + P_3^* x_3;$$

$$x_1 + x_2 + x_3 = 1;$$

$$MW_{mix} = x_1 MW_1 + x_2 MW_2 + x_3 MW_3; \text{ and}$$

$$\frac{1}{\rho_T} = \frac{w_1}{\rho_1} + \frac{w_2}{\rho_2} + \frac{w_3}{\rho_3};$$

where:

P_m is the multi-component vapor pressure of the multi-component fluid where the multi-component fluid is a three-component fluid;

x_1, x_2, and x_3 are respective mole fractions of the first component, the second component, and the third component of the three-component fluid;

P_1^*, P_2^*, and P_3^* are respectively the first vapor pressure, the second vapor pressure, and a third vapor pressure where the first component, the second component, and the third component are pure fluids;

MW_{mix} is a molecular weight of the three-component fluid;

MW_1, MW_2, and MW_3 are respective molecular weights of the first component, the second component, and the third component;

w_1, w_2, and w_3 are respective mass fractions of the first component, the second component, and the third component in the three-component fluid and are respectively equal to $x_1 MW_1 / MW_{mix}$, $x_2 MW_2 / MW_{mix}$, and $x_3 MW_3 / MW_{mix}$;

ρ_1, ρ_2, and ρ_3 are respective densities of the first component, the second component, and the third component of the three-component fluid; and

ρ_T is a density of the three-component fluid.

4. The system of one of any of the foregoing claims 1 through 3, wherein the electronics is further configured to determine a density of the multi-component fluid in the transducer based on sensor signals provided by the transducer.

5. The system of one of any of the foregoing claims 1 through 4, wherein the electronics is further configured to determine a true vapor pressure of the multi-component fluid based on a static pressure of the multi-component fluid in the transducer.

6. The system of one of any of the foregoing claims 1 through 5, wherein the electronics is a meter electronics and the transducer is a meter assembly of a vibratory meter.

7. A method of using a vapor pressure to determine a concentration of a component in a multi-component fluid, the method comprising:

determining a first vapor pressure, the first vapor pressure being a vapor pressure of a first component of the multi-component fluid;

determining a second vapor pressure, the second vapor pressure being a vapor pressure of a second component of the multi-component fluid;

using a transducer having the multi-component fluid to determine a multi-component vapor pressure, the multi-component vapor pressure being a vapor pressure of the multi-component fluid, based on a gain of a drive signal provided to the transducer; and

determining a concentration of at least one of the first component and the second component based on the multi-component vapor pressure, the first vapor pressure, and the second vapor pressure.

8. The method of claim 7, wherein determining the concentration of at least one of the first component and the second component based on the multi-component vapor pressure, the first vapor pressure, and the second vapor pressure comprises using equations:

$$P_m = P_1^* x_1 + P_2^* x_2; \text{ and}$$

$$x_1 + x_2 = 1;$$

where:

P_m is the multi-component vapor pressure and is a sum of the pressures exerted by each component of the multi-component fluid being a two-component fluid;

P_1^*, P_2^* are respectively the first vapor pressure and the second vapor pressure when the first component and the second component are pure fluids; and

x_1, x_2 are respectively mole fractions of the first and second component in the two-component fluid.

9. The method of claim 7, wherein determining the concentration of at least one of the first component and the second component based on the multi-component vapor pressure, the first vapor pressure, and the second vapor pressure comprises determining the concentrations of the first component, the second component, and a third component using equations:

$$P_m = P_1^* x_1 + P_2^* x_2 + P_3^* x_3;$$

$$x_1 + x_2 + x_3 = 1;$$

$$MW_{mix} = x_1 MW_1 + x_2 MW_2 + x_3 MW_3; \text{ and}$$

$$\frac{1}{\rho_T} = \frac{w_1}{\rho_1} + \frac{w_2}{\rho_2} + \frac{w_3}{\rho_3};$$

where:

P_m is the multi-component vapor pressure of the multi-component fluid where the multi-component fluid is a three-component fluid;

x_1, x_2, and x_3 are respective mole fractions of the first component, the second component, and the third component of the three-component fluid;

P_1^*, P_2^*, and P_3^* are respectively the first vapor pressure, the second vapor pressure, and a third vapor pressure where the first component, the second component, and the third component are pure fluids;

MW_{mix} is a molecular weight of the three-component fluid;

MW_1, MW_2, and MW_3 are respective molecular weights of the first component, the second component, and the third component;

w_1, w_2, and w_3 are respective mass fractions of the first component, the second component, and the third component in the three-component fluid and are

respectively equal to $x_1 MW_1/MW_{mix}$, $x_2 MW_2/MW_{mix}$, and $x_3 MW_3/MW_{mix}$;

ρ_1, ρ_2, and ρ_3 are respective densities of the first component, the second component, and the third component of the three-component fluid; and

ρ_T is a density of the three-component fluid.

10. The method of one of any of the foregoing claims 7 through 9, further comprising determining a density of the multi-component fluid in the transducer based on sensor signals provided by the transducer.

11. The method of one of any of the foregoing claims 7 through 10, further comprising determining a true vapor pressure of the multi-component fluid based on a static pressure of the multi-component fluid in the transducer.

12. The method of one of any of the foregoing claims 7 through 11, wherein the transducer is a meter assembly of a vibratory meter.

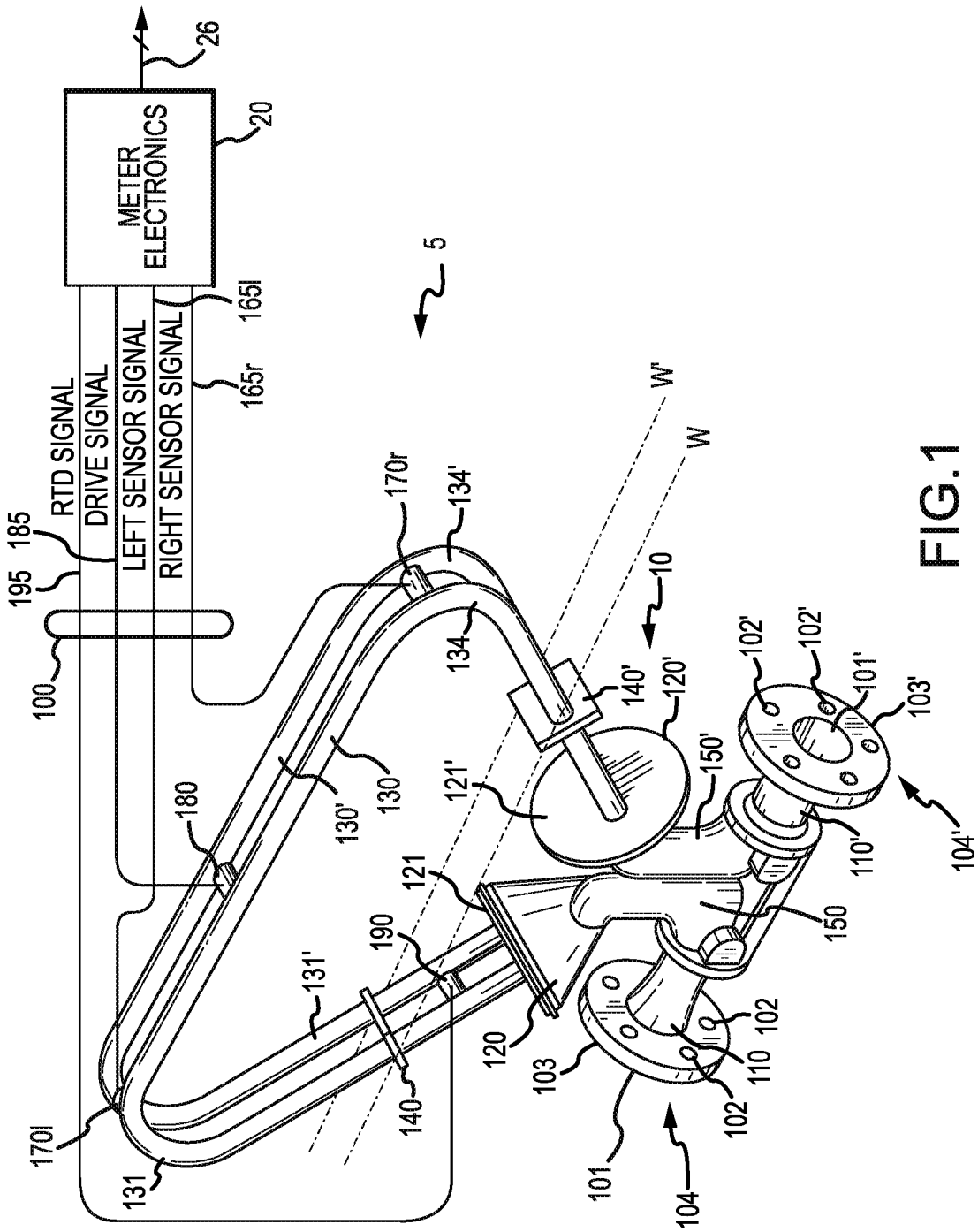
METER ELECTRONICS
20
26
5
RTD SIGNAL
DRIVE SIGNAL
LEFT SENSOR SIGNAL
RIGHT SENSOR SIGNAL
185
195
100
165l
165r
170l
170r
131
131'
130
130'
134
134'
180
190
140
140'
120
120'
121
121'
150
150'
110
110'
101
101'
102
102'
103
103'
104
104'
10
W
W'

FIG.1

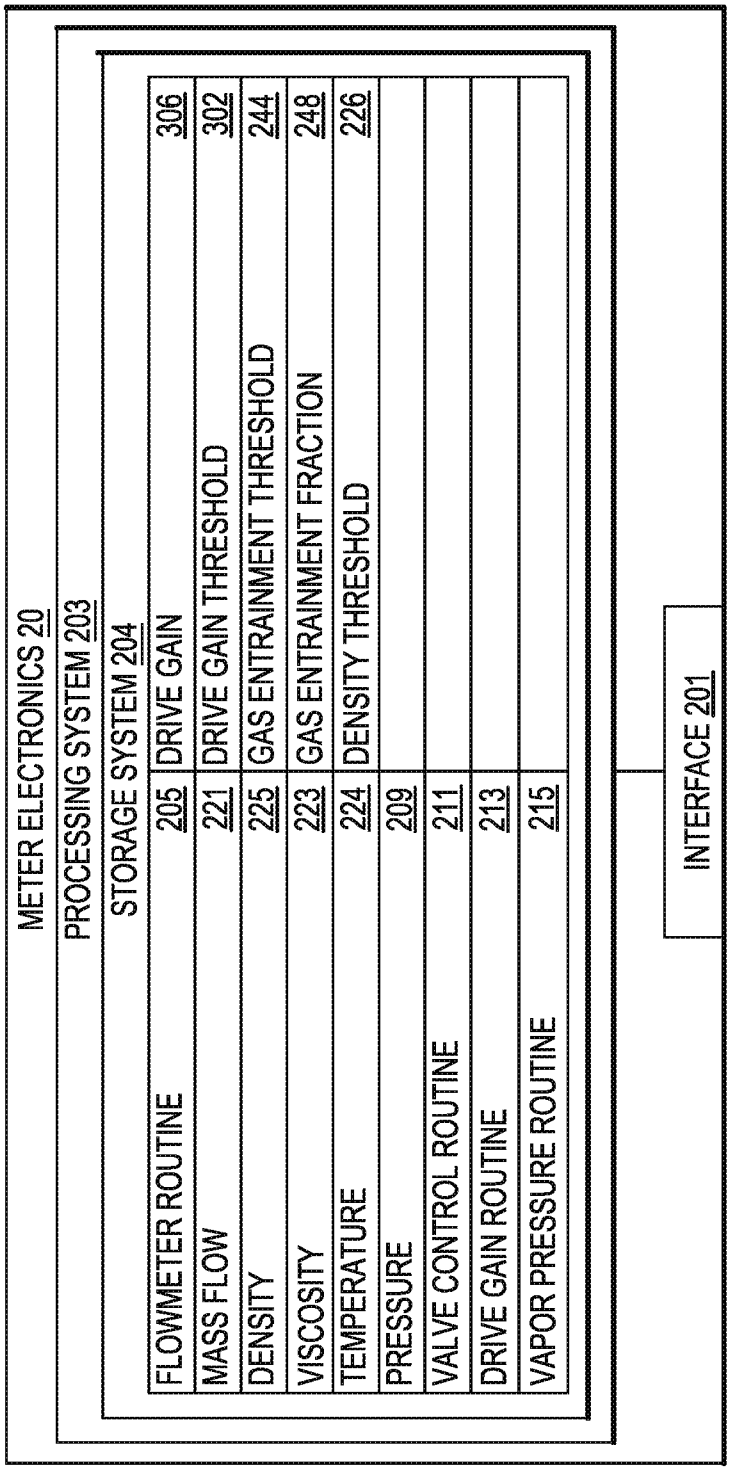
METER ELECTRONICS 20
PROCESSING SYSTEM 203
STORAGE SYSTEM 204
FLOWMETER ROUTINE 205
MASS FLOW 221
DENSITY 225
VISCOSITY 223
TEMPERATURE 224
PRESSURE 209
VALVE CONTROL ROUTINE 211
DRIVE GAIN ROUTINE 213
VAPOR PRESSURE ROUTINE 215
DRIVE GAIN 306
DRIVE GAIN THRESHOLD 302
GAS ENTRAINMENT THRESHOLD 244
GAS ENTRAINMENT FRACTION 248
DENSITY THRESHOLD 226
INTERFACE 201

FIG.2

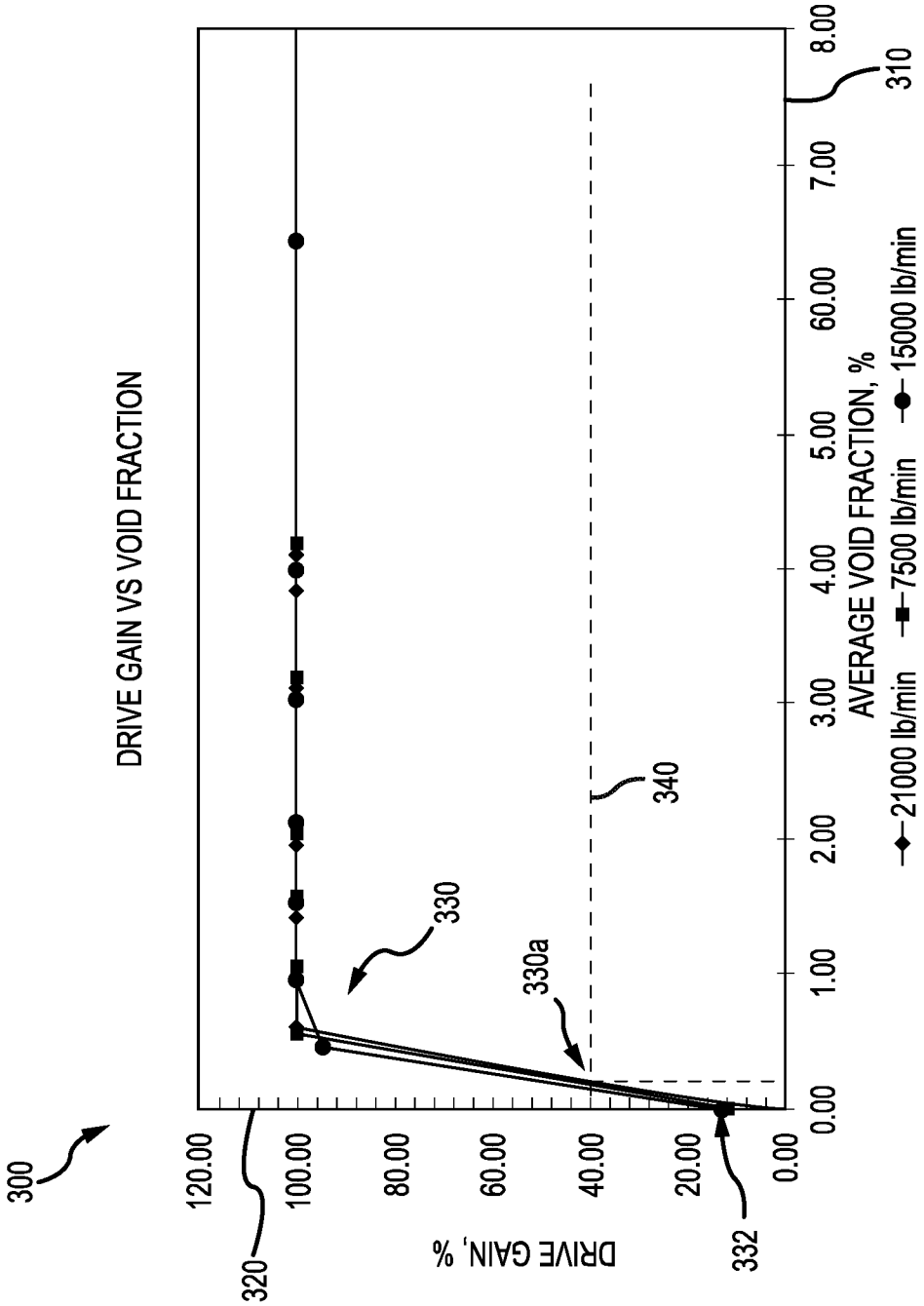
DRIVE GAIN VS VOID FRACTION
300
320
332
330
330a
340
310
DRIVE GAIN, %
120.00
100.00
80.00
60.00
40.00
20.00
0.00
0.00
1.00
2.00
3.00
4.00
5.00
60.00
7.00
8.00
AVERAGE VOID FRACTION, %
21000 lb/min
7500 lb/min
15000 lb/min

FIG.3

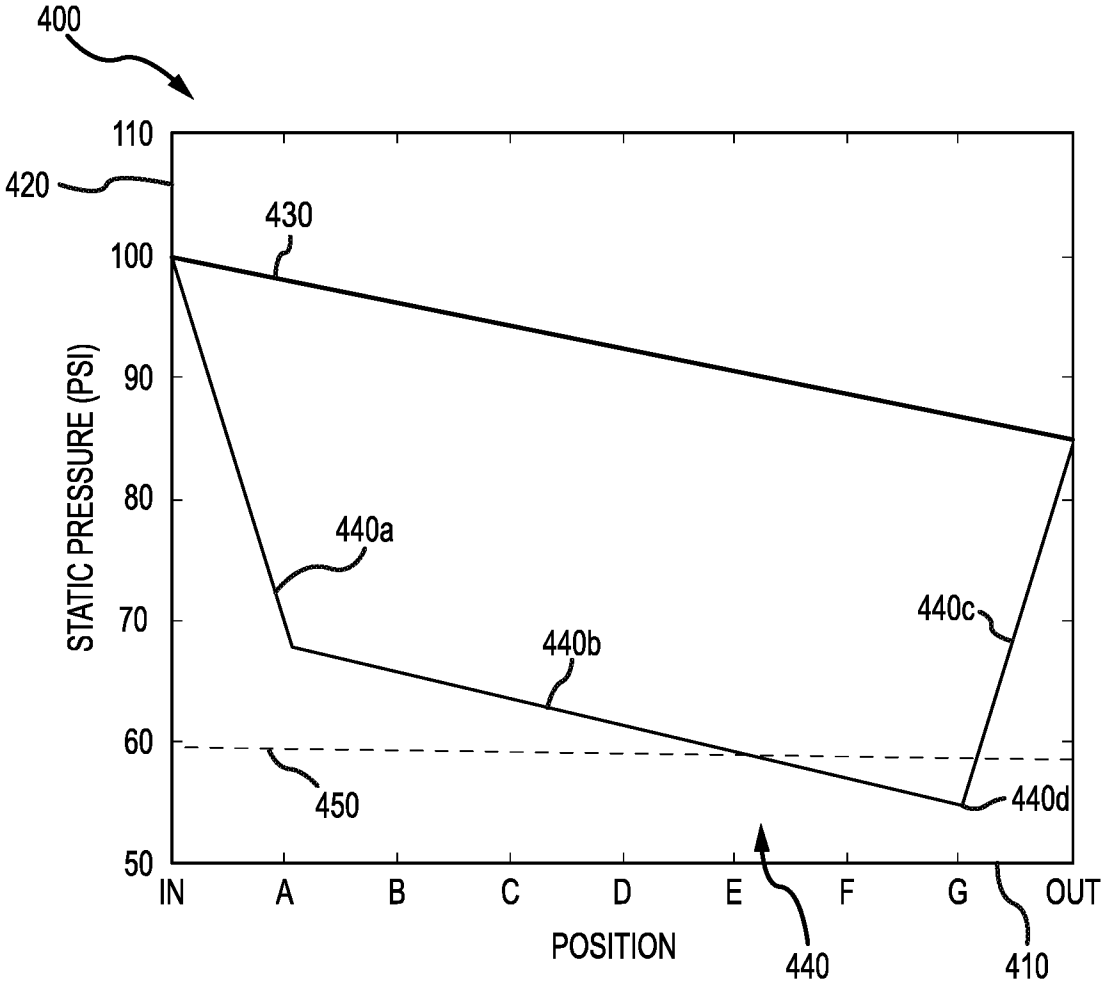
400
420
110
100
90
80
70
60
50
STATIC PRESSURE (PSI)
430
440a
440b
440c
440d
450
IN
A
B
C
D
E
F
G
OUT
POSITION
440
410

FIG.4

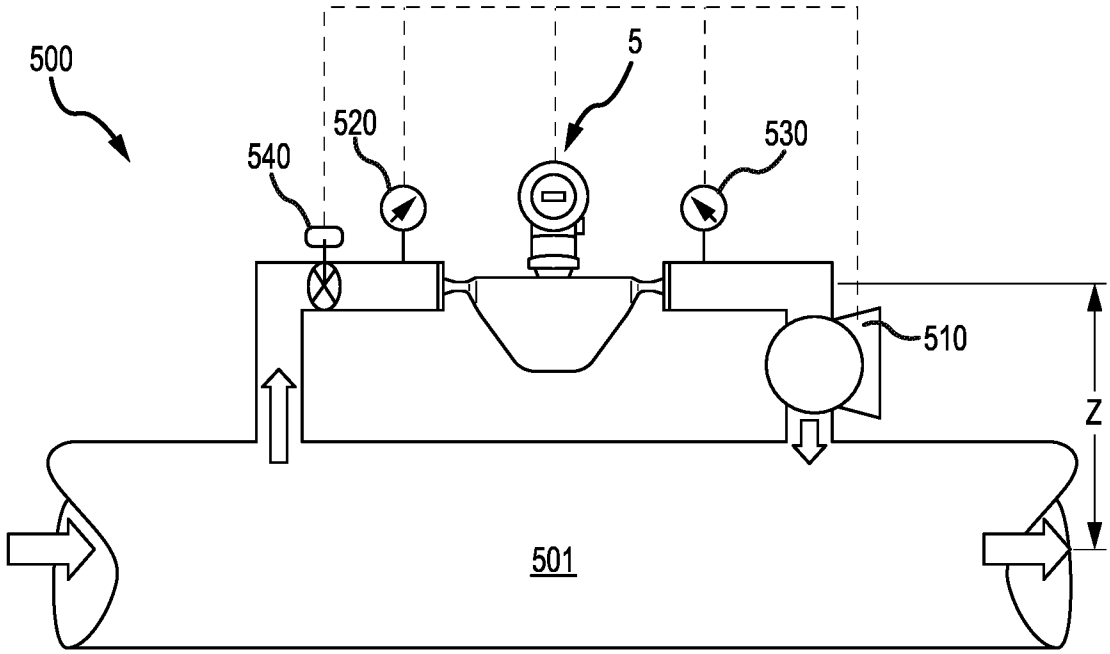

FIG.5

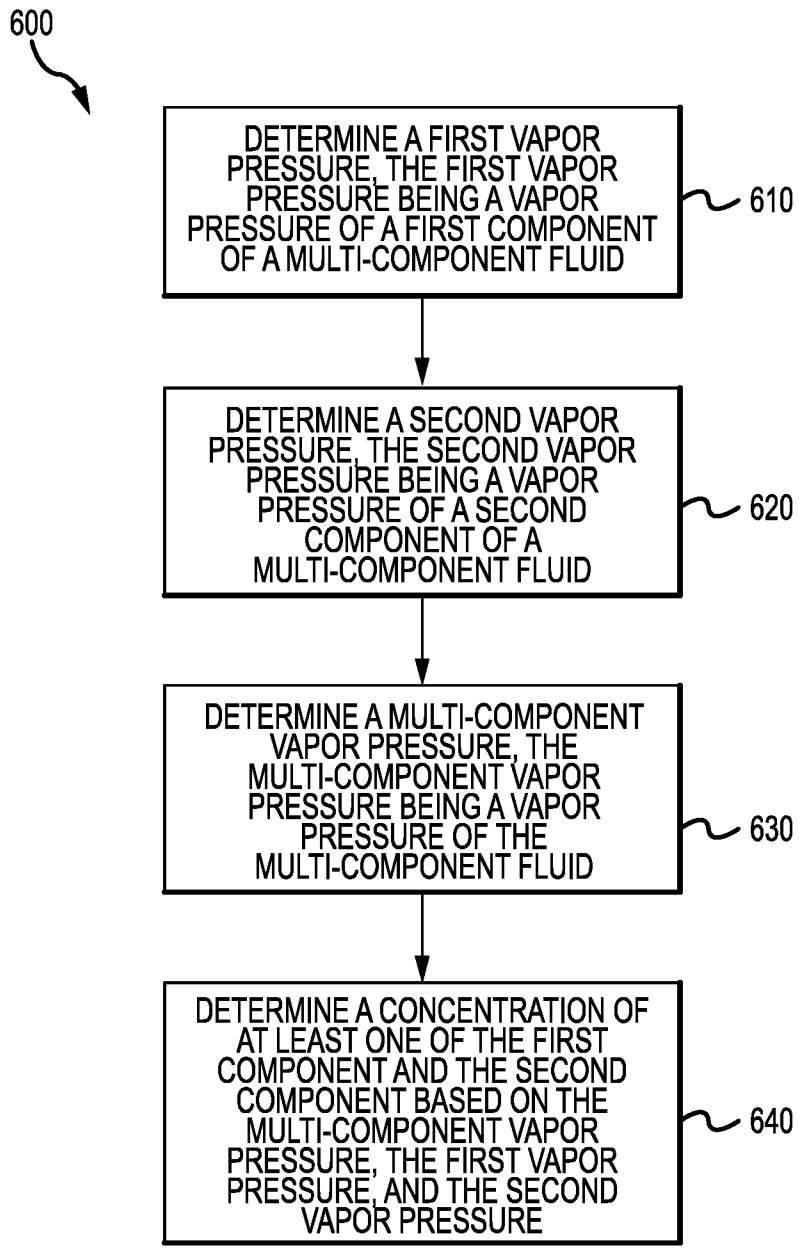
600
DETERMINE A FIRST VAPOR PRESSURE, THE FIRST VAPOR PRESSURE BEING A VAPOR PRESSURE OF A FIRST COMPONENT OF A MULTI-COMPONENT FLUID
610
DETERMINE A SECOND VAPOR PRESSURE, THE SECOND VAPOR PRESSURE BEING A VAPOR PRESSURE OF A SECOND COMPONENT OF A MULTI-COMPONENT FLUID
620
DETERMINE A MULTI-COMPONENT VAPOR PRESSURE, THE MULTI-COMPONENT VAPOR PRESSURE BEING A VAPOR PRESSURE OF THE MULTI-COMPONENT FLUID
630
DETERMINE A CONCENTRATION OF AT LEAST ONE OF THE FIRST COMPONENT AND THE SECOND COMPONENT BASED ON THE MULTI-COMPONENT VAPOR PRESSURE, THE FIRST VAPOR PRESSURE, AND THE SECOND VAPOR PRESSURE
640

FIG.6

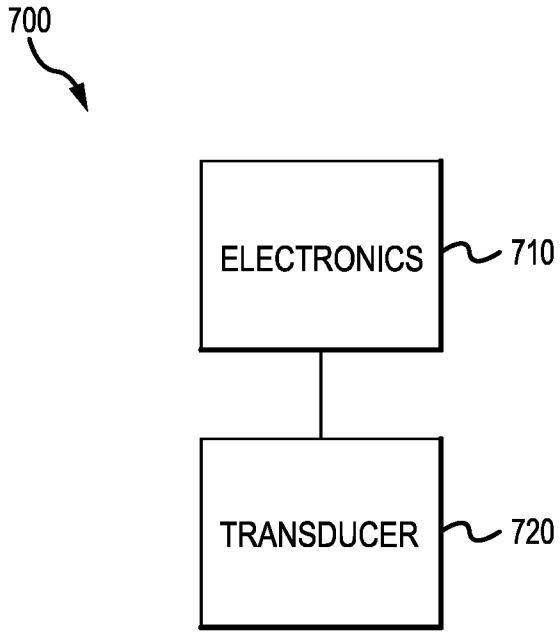

FIG.7