Oct. 31, 1933. M. M. WHIPPLE 1,932,540

SPACER AND TIE ROD REMOVER

Filed Feb. 21, 1931

Fig. 1

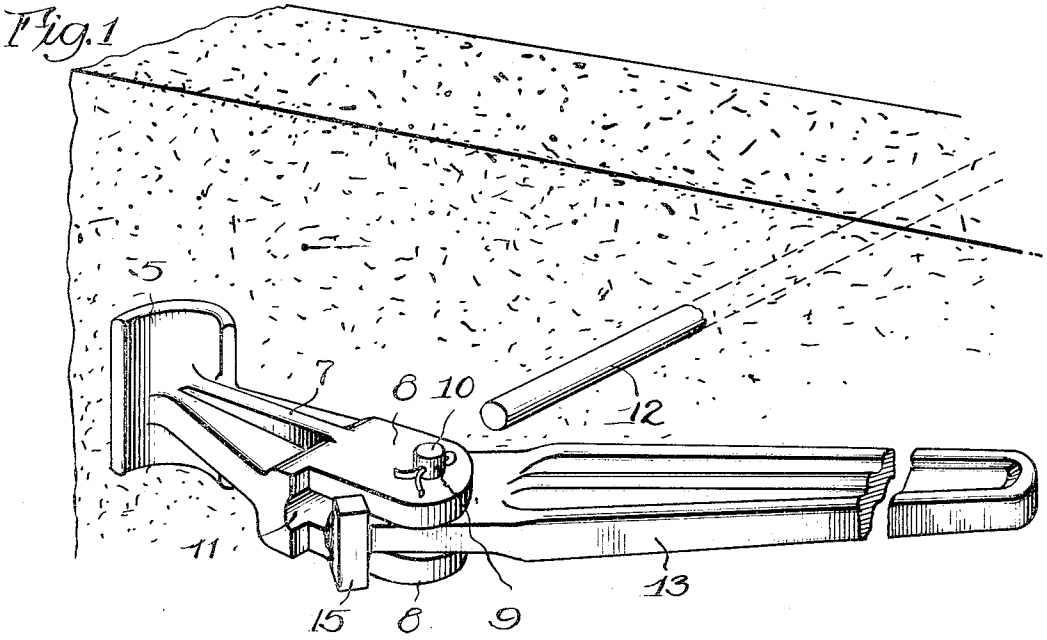

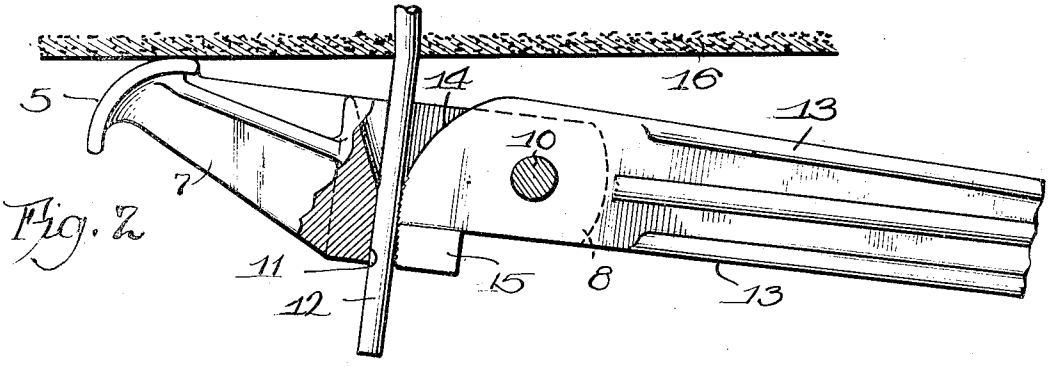

Fig. 2

Fig. 3

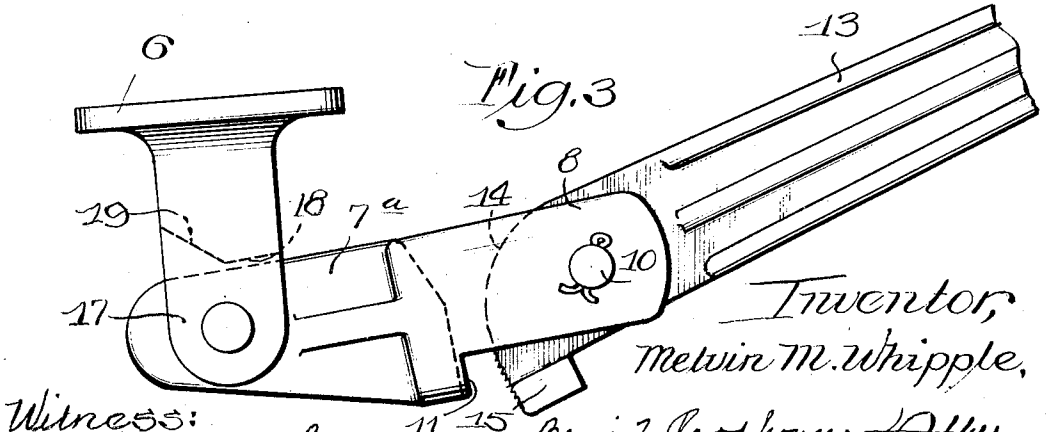

Inventor,
Melvin M. Whipple,
Benj. J. Goodhouse Atty.

Witness:
Chas. L. Hough.

Patented Oct. 31, 1933 1,932,540

UNITED STATES PATENT OFFICE

1,932,540

SPACER AND TIE ROD REMOVER

Melvin M. Whipple, Berwyn, Ill., assignor of one-half to George B. Bosco, Chicago, Ill.

Application February 21, 1931. Serial No. 517,420

1 Claim. (Cl. 254—80)

My present invention relates to the provision of a tool for the removal from the concrete of spacer and tie rods employed in the preparation of forms or molds for the casting of the concrete either before or subsequent to the removal of the forms or molds. Such spacer and tie rods are more generally employed with molds for the heavier and more substantial portions of concrete construction such as retaining walls, foundations and heavy columns requiring spacer and tie rods between the meeting edges of separate panels. Both the forms and the spacer and tie rods for such work have to be heavy and substantial and the spacer and tie rods involve considerable outlay and their recovery and salvage for re-use constitutes quite an item in the economical prosecution of building operations. There are conditions in which it is either highly desirable or necessary to remove the rods from the completed masonry. For instance, where final appearance is important the heavy tie rods cannot be cut off so as to seal their ends from the weather and the rusting thereof causes an unsightly stain. Also, constructions in connection with the generation and transmission of electricity have to have the rods removed therefrom.

It has been long well known that the extremely fine particles of Portland cement in a concrete mix forms a close contact and bond with such spacer and tie rods, and it has heretofore been suggested to cover such rods with paper so as to facilitate their removal. Such a practice, however, involves considerable expense and is uncertain in its results, and the masons now, so far as I am aware, endeavor to remove the rods while the construction is what is termed "green" or not completely set. Such a practice, where the condition of the wall has to be estimated, not infrequently results in the fracture of a not sufficiently hardened wall and the impairment of its strength and efficiency, while, on the other hand, if the masonry is permitted to thoroughly cure, it is often impossible to recover or salvage the rod.

It has been my object to provide simple and effective apparatus of sufficient power to permit of the rods being removed step by step after the masonry has sufficiently cured so that fracture of the green masonry need not be feared and after the forms have been removed, as the requisite amount of force cannot usually be applied to wooden forms without the mashing or breaking thereof.

I have attained the aforementioned results by means of the structure shown in the accompanying drawing, in which—

Fig. 1 is a perspective of an apparatus embodying my invention in position for assembly with the end of a rod protruding from a concrete wall;

Fig. 2 is a fragmental plan of the structure shown in Fig. 1 after engagement with the rod, a portion thereof being in section to more clearly illustrate the engagement with the rod; and

Fig. 3 is a fragmental plan of a modified form of my device.

Similar reference characters refer to similar parts throughout the respective views.

My apparatus comprises a lever of the second class in which the fulcrum is a plate, either curved, as shown at 5 in Figs. 1 and 2, or plain, as shown at 6 in Fig. 3. The plate is provided so that there will be an ample surface or bearing when placed against the masonry or form to support the considerable effort which must be exerted without crushing or otherwise damaging the masonry. From the concave face of the plate 5 extends a ribbed projection 7 terminating in the parallel plates or ears 8—8, perforated at 9 to receive the pintle 10. The ribbed projection 7 is given a cylindrical form at 11 between the bases of the plates 8 so as to secure greater contact with the rod 12 when introduced between the plates.

Pivoted upon the pintle 10 between the plates 8—8 is the handle and jaw member 13 of my device. The corner of the member 13 extending between the plates 8 and on the fulcrum side of the device is cut back from about the longitudinal axis of the member, as at 14, so that when the handle is swung, as shown in Fig. 1, the space between the cylindrical surface 11 and the butt of the handle will be increased for the reception of the rod.

A practical size of device embodying my present invention is from three to four feet long, and this considerable leverage is often increased by inserting the handle end of the member 13 into six or eight feet of pipe. With such a leverage it is possible to squeeze or bite off the rod, and to prevent such a happening I cast, or otherwise provide transversely of the member 13, the stop block 15, the ends of which abut the plates 8 when the handle 13 is in gripping position. The forward edge of the stop block 15, together with the configuration of the end of the member 7, secures additional frictional engagement between the rod and the tool.

When the tool is engaged with the rod 12 and

wall 16, as shown in Fig. 2, the plate 5 rolls upon the wall and the rod 12 is slightly bent, as it is withdrawn, as shown. This bending may be made very slight by moving the device only through a small arc and taking new grips of the rod. With the heavier rods, however, it may be desired to use such a modified construction as is shown in Fig. 3, in which a column terminating in the plates or ears 17 arises from the back of the fulcrum plate 6, between which ears or plates 17 is pivoted the member 7*a* differing from the member 7 only in being formed for entry between the ears or plates 17. The bottom of the channel between the ears 17 is angled, as at 18 and 19, to provide limiting stops to prevent the apparatus from being worked through an arc which would unduly bend the rod 12. With the structure shown in Fig. 3 the amount of bending of the rod during its withdrawal is entirely negligible.

With the device herein shown and described, force can be applied without injuring the wall or rod sufficient to remove any rod which the apparatus will engage.

Having described my invention what I claim as new and desire to secure by Letters Patent is:

A device of the kind described, comprising a cylindrical fulcrum plate, a ribbed web arising at right angles from the concave surface of said fulcrum plate, said web terminating in parallel perforated ears, a second member pivoted between said ears, the included end whereof is cut back on one side of its longitudinal axis, and a stop extending laterally upon both sides of said second member for engaging said parallel ears for limiting the closing movement of said members.

MELVIN M. WHIPPLE.