US006554092B2

(12) **United States Patent**
Midorikawa et al.

(10) **Patent No.: US 6,554,092 B2**
(45) **Date of Patent: Apr. 29, 2003**

(54) **SEATBELT DEVICE**

(75) Inventors: **Yukinori Midorikawa**, Fujisawa (JP); **Katsuyasu Ono**, Fujisawa (JP); **Masuo Matsuki**, Fujisawa (JP)

(73) Assignee: **NSK Autoliv Co., Ltd.**, Fujisawa (JP)

(*) Notice: Subject to any disclaimer, the term of this patent is extended or adjusted under 35 U.S.C. 154(b) by 0 days.

(21) Appl. No.: **09/986,379**

(22) Filed: **Nov. 8, 2001**

(65) **Prior Publication Data**

US 2002/0030357 A1 Mar. 14, 2002

Related U.S. Application Data

(62) Division of application No. 09/421,872, filed on Oct. 21, 1999, now Pat. No. 6,332,629.

(30) **Foreign Application Priority Data**

Oct. 23, 1998 (JP) 10-302088
Jun. 25, 1999 (JP) 11-180957
Jul. 1, 1999 (JP) 11-188256

(51) **Int. Cl.**[7] **B60R 22/34**; B60R 22/48

(52) **U.S. Cl.** **180/268**; 180/272; 280/807; 242/390.9

(58) **Field of Search** 280/807, 806; 180/268, 272; 242/390.9, 390.8

(56) **References Cited**

U.S. PATENT DOCUMENTS

4,478,433 A * 10/1984 Taguchi et al. 280/807
4,655,312 A * 4/1987 Frantom et al. 280/807
5,552,986 A * 9/1996 Omura et al. 280/807
5,765,774 A * 6/1998 Maekawa et al. 280/807
5,788,281 A * 8/1998 Yanagi et al. 280/807

FOREIGN PATENT DOCUMENTS

JP 6-71333 * 10/1994
WO 96/30235 * 10/1996

* cited by examiner

Primary Examiner—Peter C. English
(74) *Attorney, Agent, or Firm*—Crowell & Moring LLP

(57) **ABSTRACT**

Provided is a seatbelt device capable of realizing a comfortable seatbelt-wearing environment as well as appropriately securing and protecting a passenger. The seatbelt device is further capable of realizing an immediate escape or rescue of a passenger after a vehicle accident, thereby providing extra safety and a swift escape by protracting the webbing in accordance with the state of the vehicle accident. This seatbelt device is provided with a retractor which uses a motor for retracting and protracting the webbing that secures a passenger to his/her seat, and a controller for rotating the motor and at least retracting the webbing. The controller is capable of altering the protraction mode of the webbing in accordance with the state of the webbing fastened by the passenger.

14 Claims, 23 Drawing Sheets

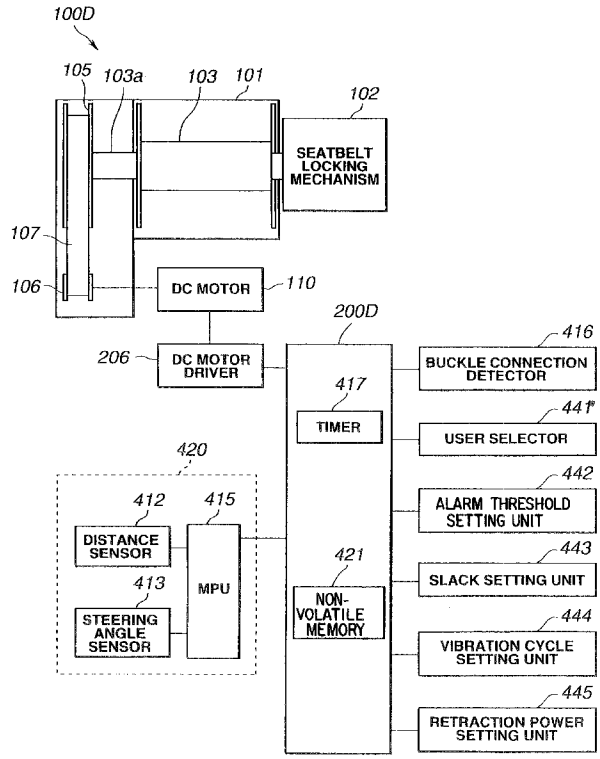

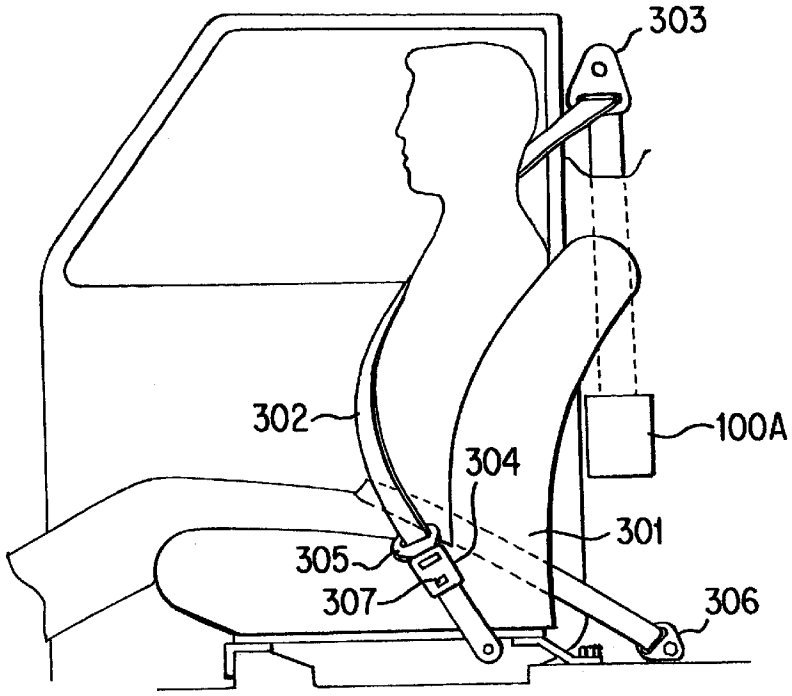
303
302
100A
304
301
305
307
306

FIG. 1

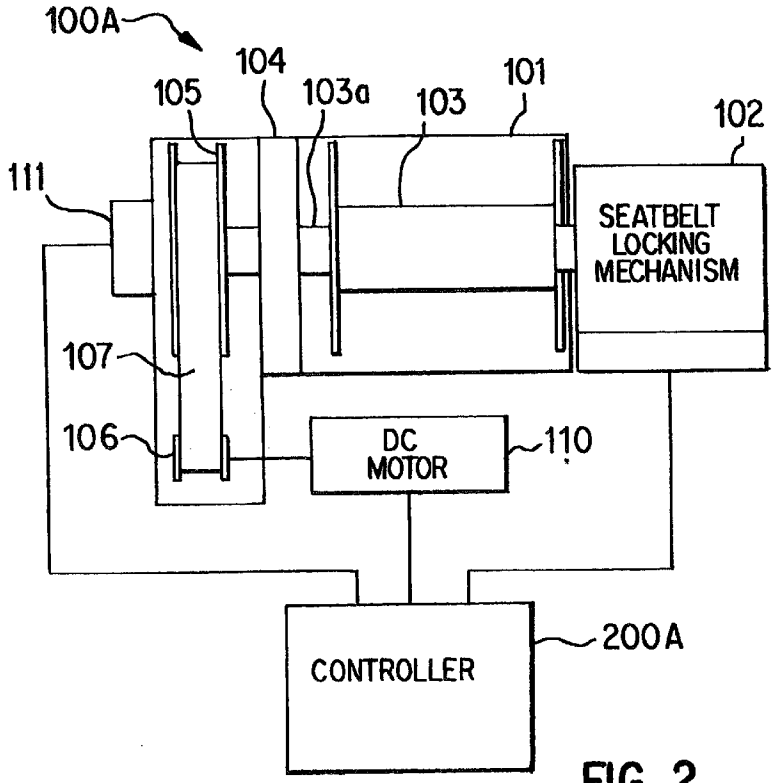
100A
104
105
103a
103
101
102
111
SEATBELT LOCKING MECHANISM
107
106
DC MOTOR
110
CONTROLLER
200A

FIG. 2

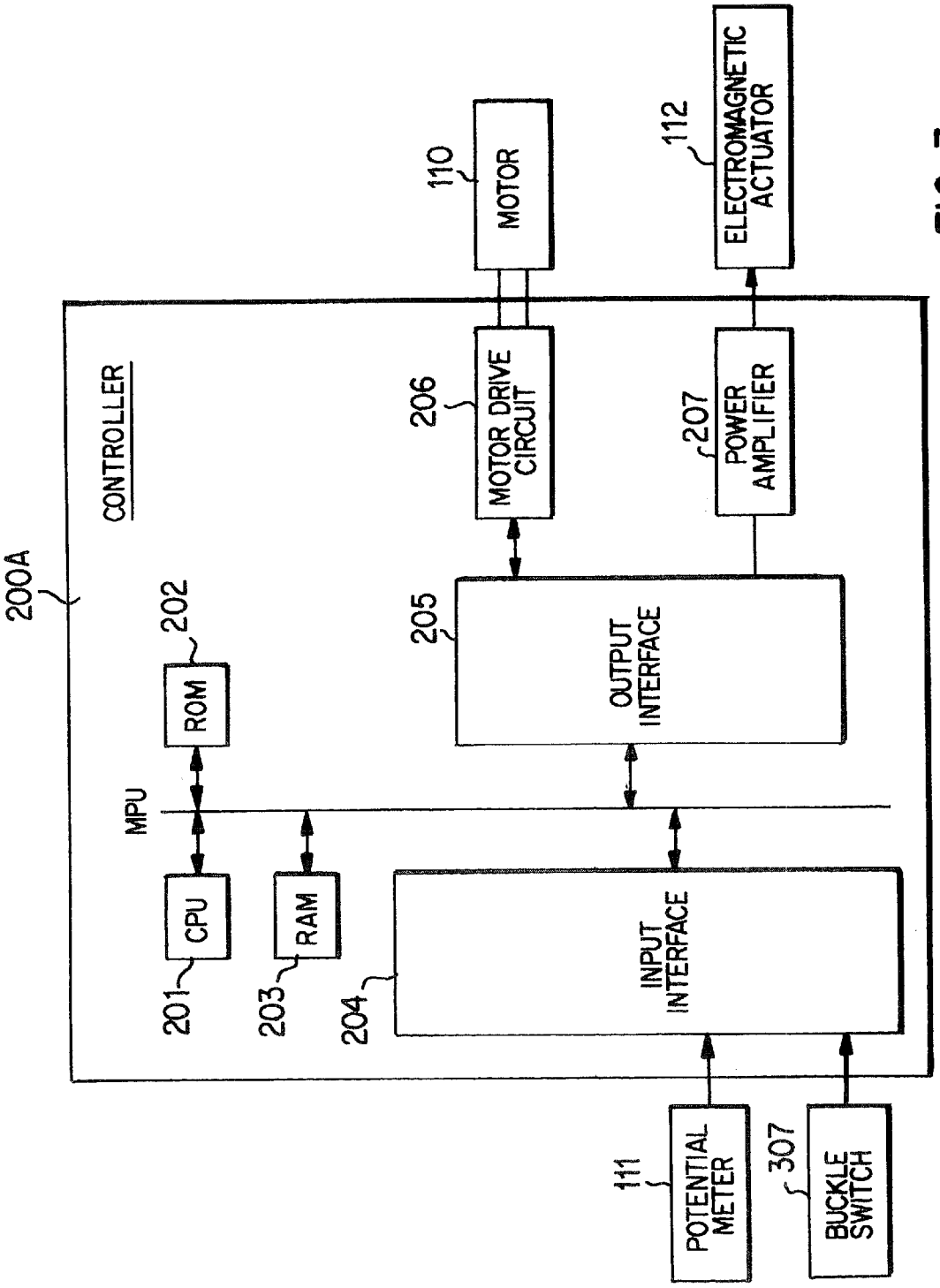
200A
CONTROLLER
MPU
CPU
201
ROM
202
RAM
203
204
INPUT INTERFACE
205
OUTPUT INTERFACE
206
MOTOR DRIVE CIRCUIT
207
POWER AMPLIFIER
110
MOTOR
112
ELECTROMAGNETIC ACTUATOR
111
POTENTIAL METER
307
BUCKLE SWITCH

FIG. 3

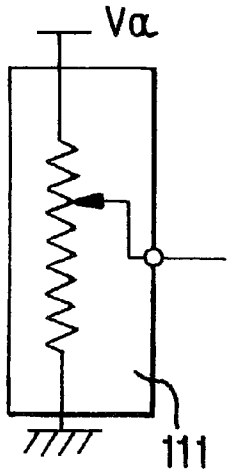
Vα
111

FIG. 4

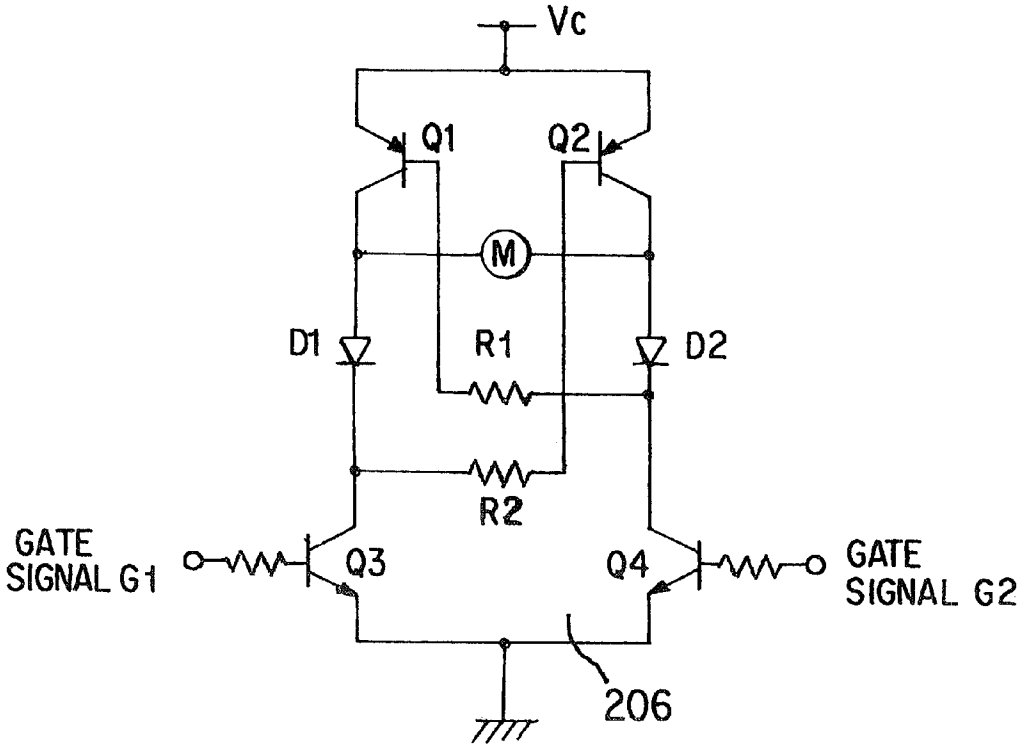
Vc
Q1
Q2
M
D1
R1
D2
R2
GATE SIGNAL G1
Q3
Q4
GATE SIGNAL G2
206

FIG. 5

FIG.6

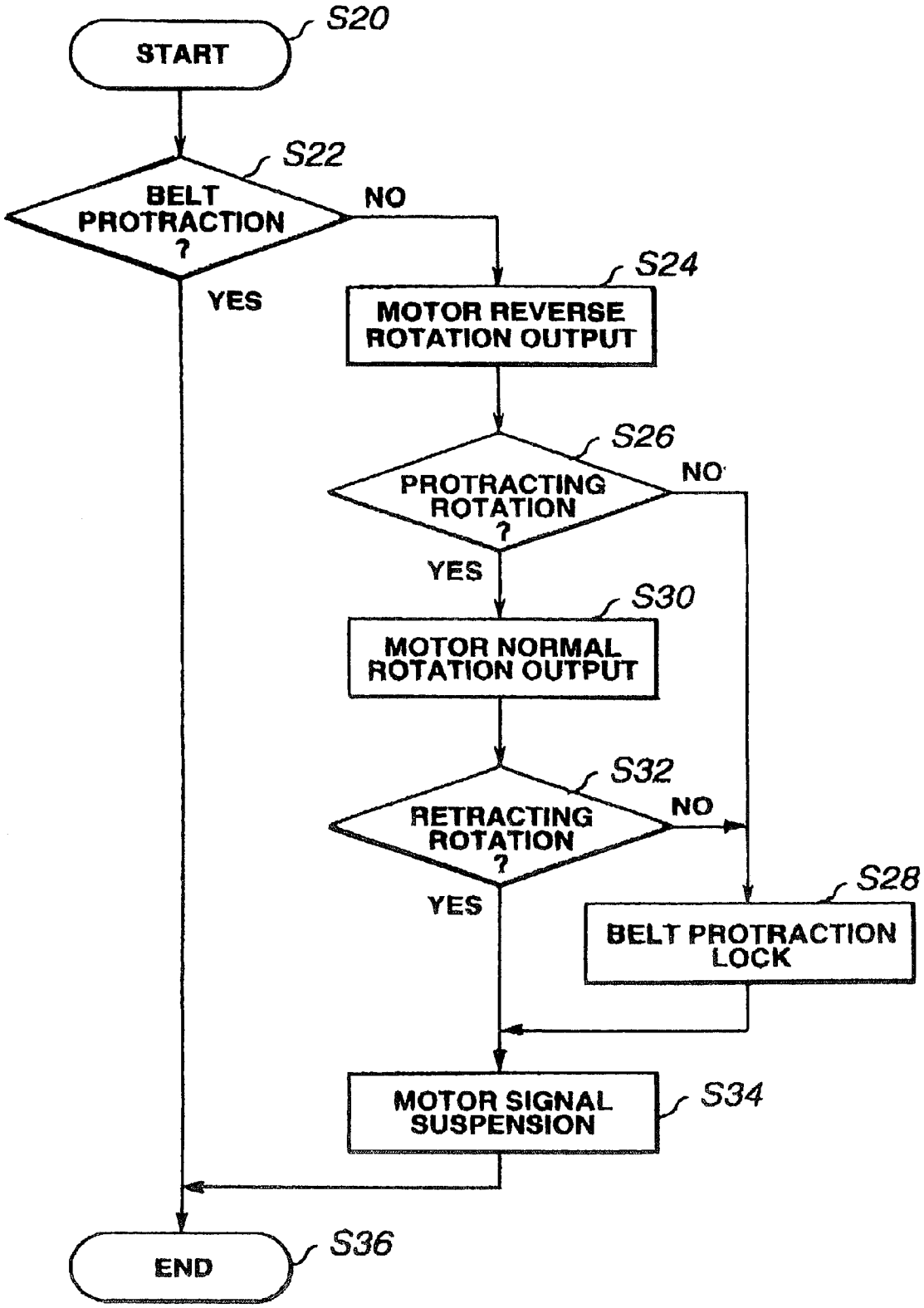
S20
START
S22
BELT PROTRACTION ?
NO
YES
S24
MOTOR REVERSE ROTATION OUTPUT
S26
PROTRACTING ROTATION ?
NO
YES
S30
MOTOR NORMAL ROTATION OUTPUT
S32
RETRACTING ROTATION ?
NO
YES
S28
BELT PROTRACTION LOCK
MOTOR SIGNAL SUSPENSION
S34
END
S36

FIG.7

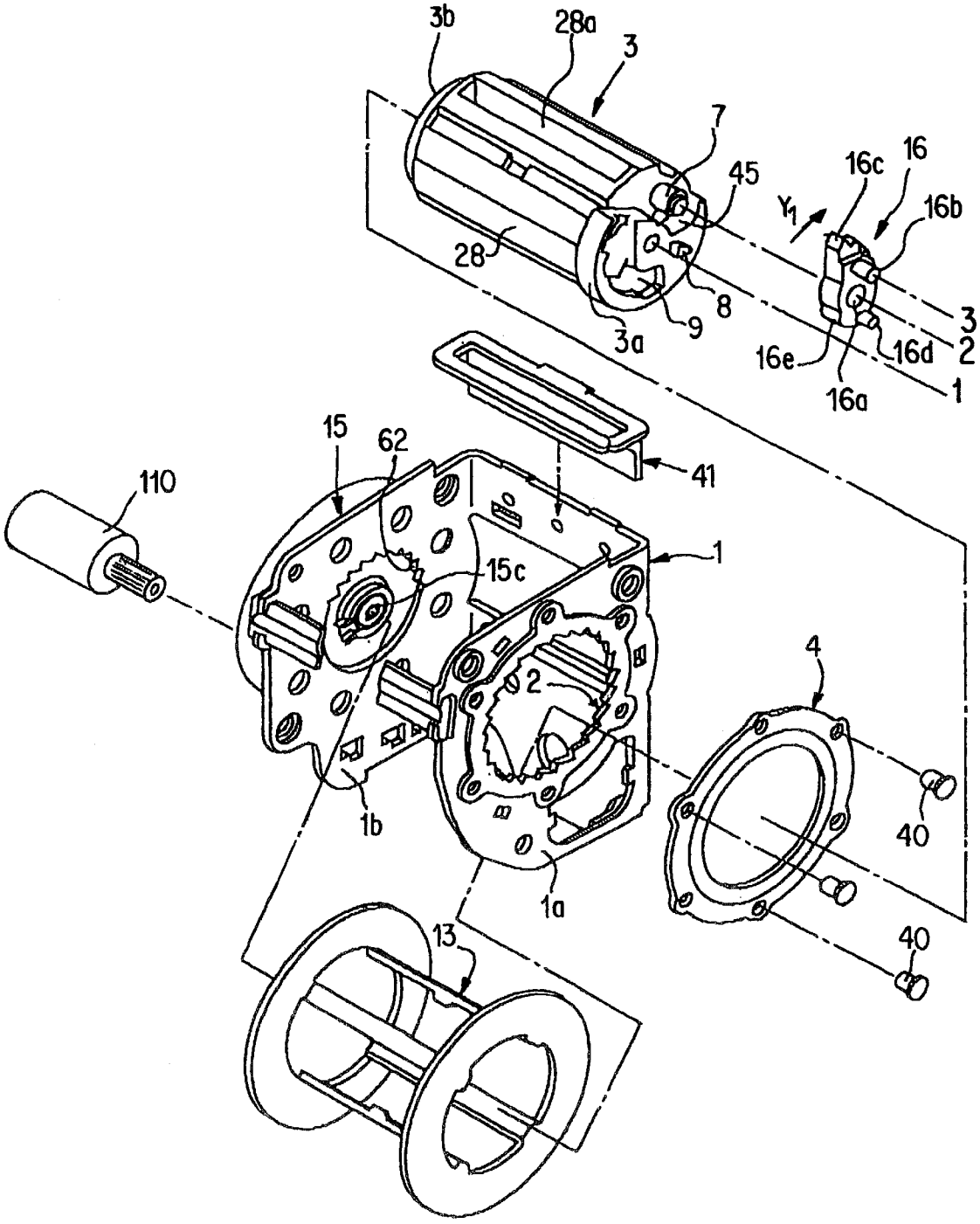
3b
28a
3
7
45
16c
16
16b
Y1
28
8
9
3a
3
2
1
16e
16d
16a
15
62
41
110
15c
1
4
2
1b
40
1a
13
40

FIG.8

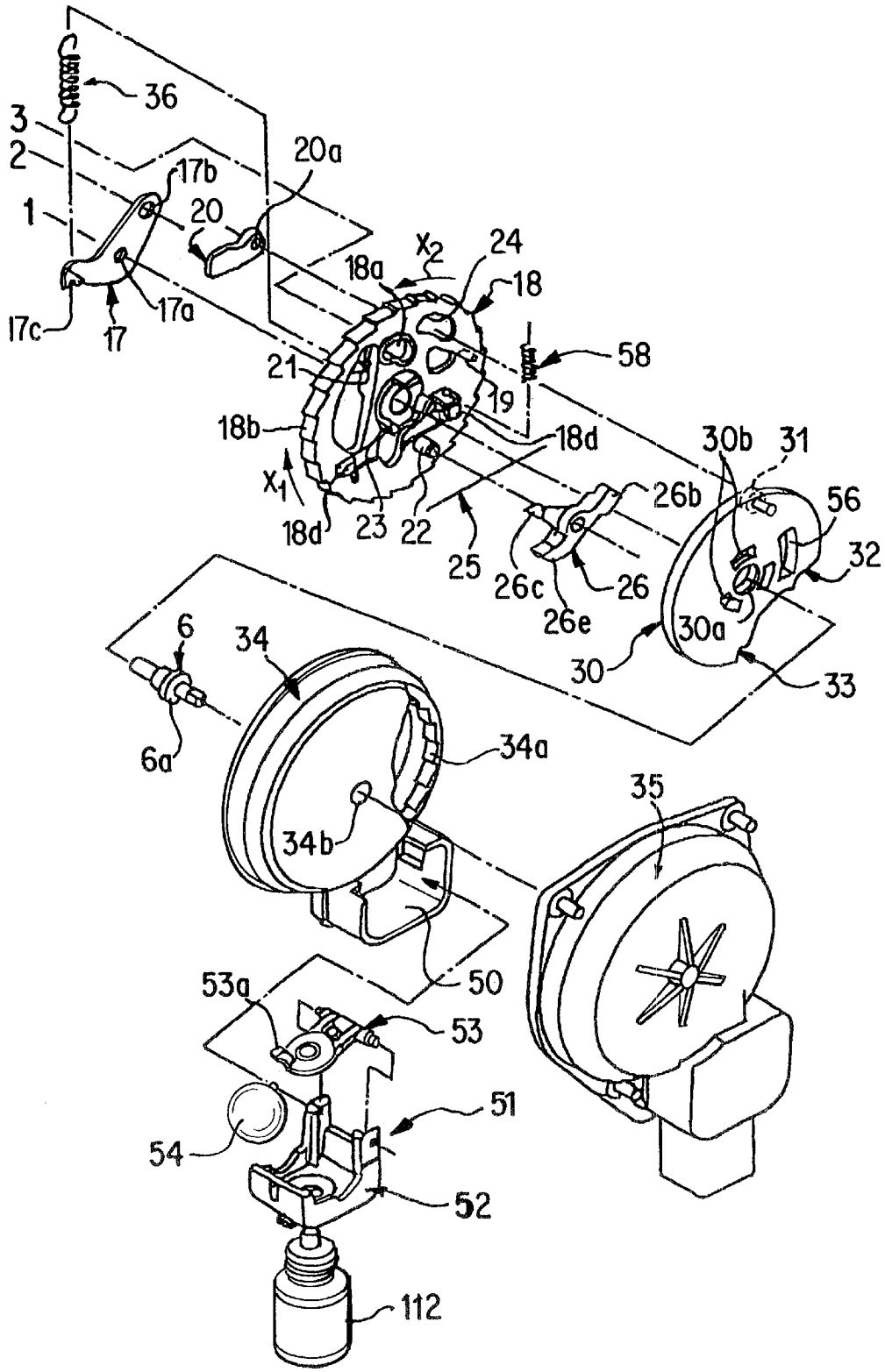
36
3
2
1
17b
20
20a
17c
17
17a
X2
24
18a
18
58
21
19
18b
18d
30b
31
X1
26b
56
18d
23
22
25
26c
26
32
26e
30a
6
34
30
33
6a
34a
35
34b
50
53a
53
51
54
52
112

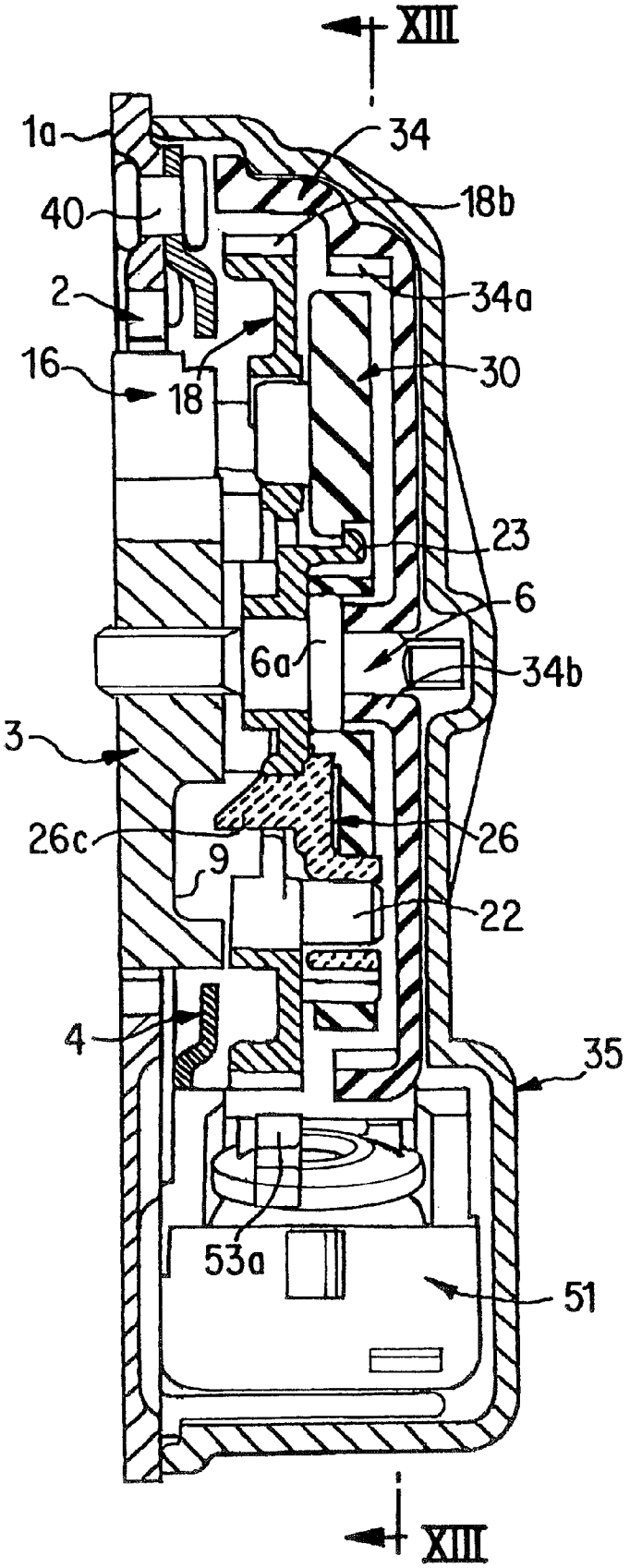
XIII
1a
34
40
18b
2
34a
16
18
30
23
6
6a
34b
3
26c
26
9
22
4
35
53a
51
XIII

FIG. 9

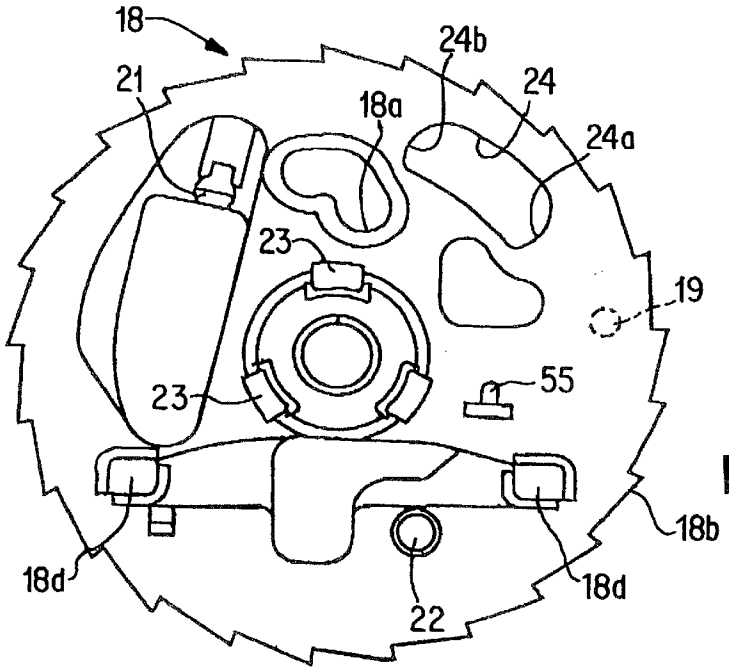

FIG.10

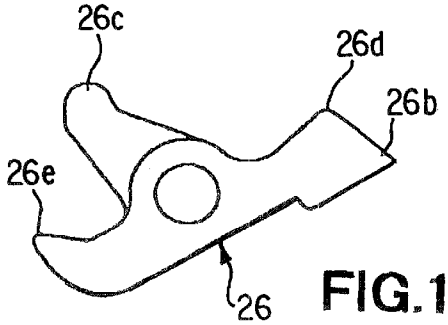

FIG.11

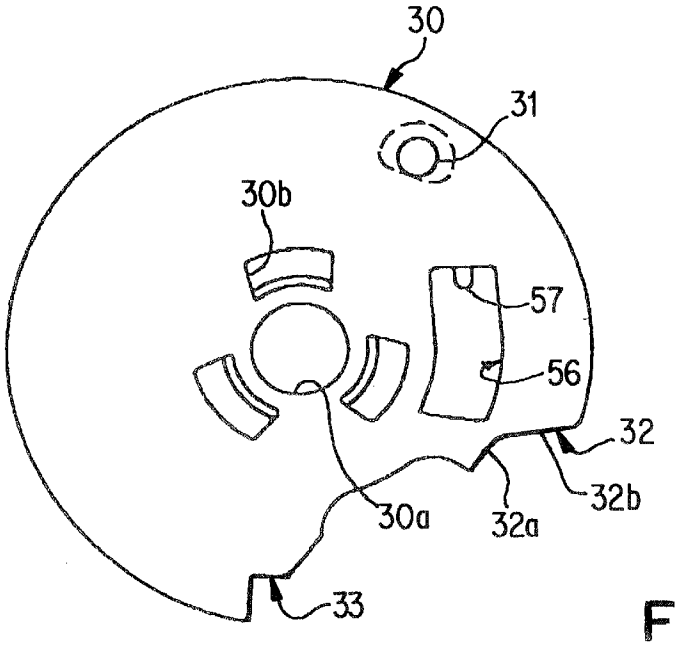

FIG.12

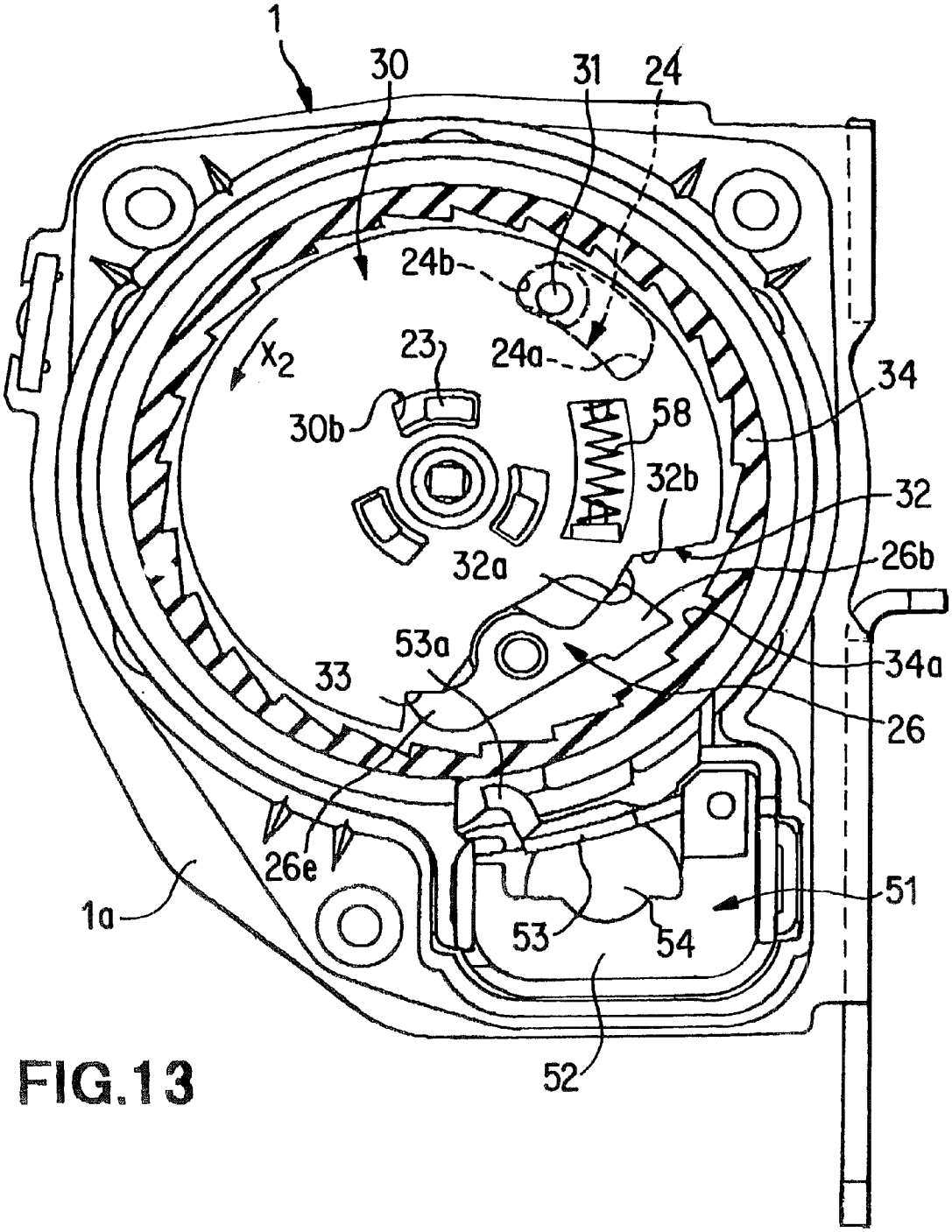
1
30
31
24
24b
24a
23
X_2
30b
58
32b
34
32
26b
32a
53a
34a
33
26
26e
1a
51
53
54
52

FIG.13

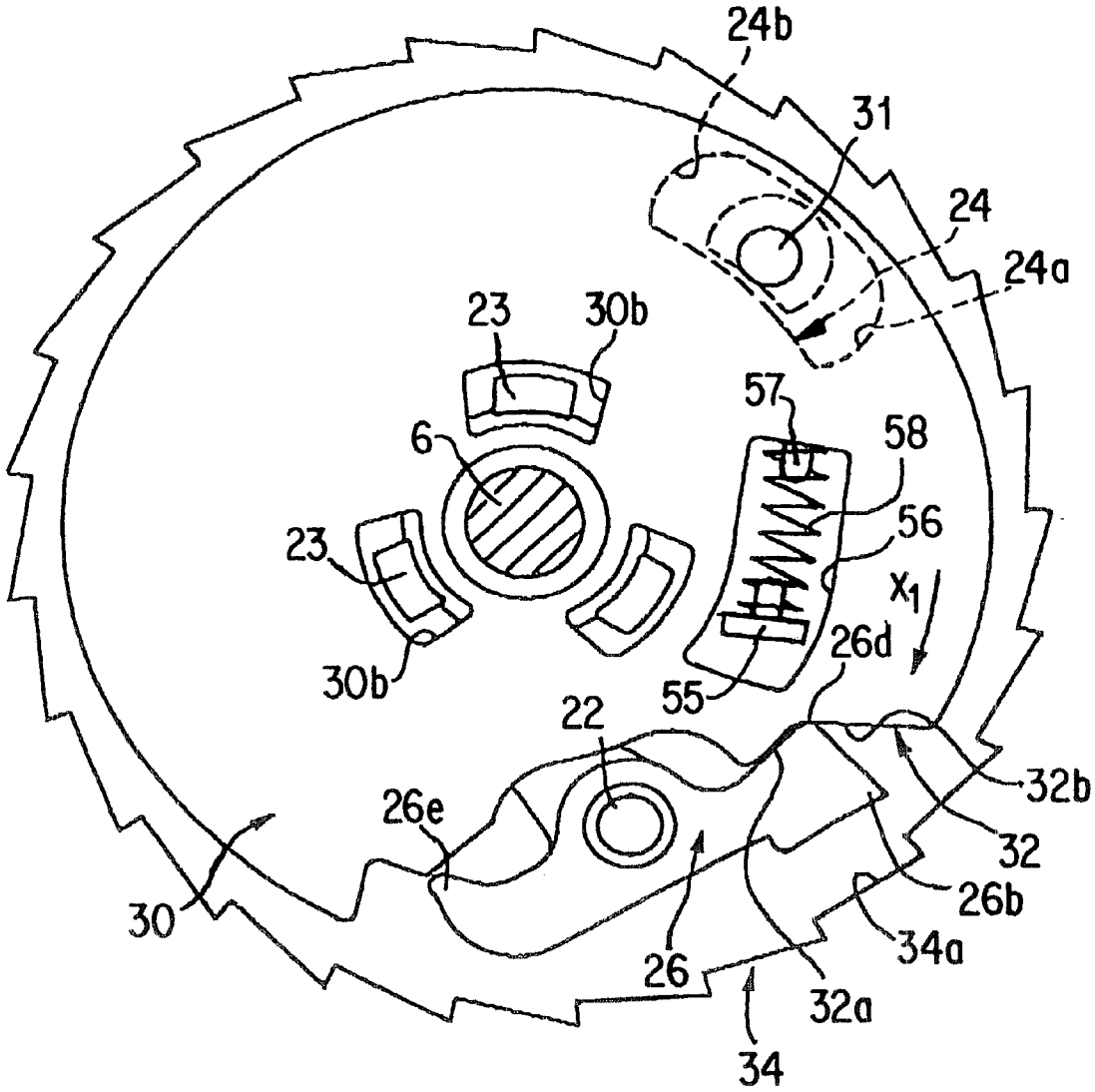
24b
31
24
24a
23
30b
57
58
6
56
23
X_1
26d
30b
55
22
32b
26e
32
30
26b
34a
26
32a
34

FIG.14

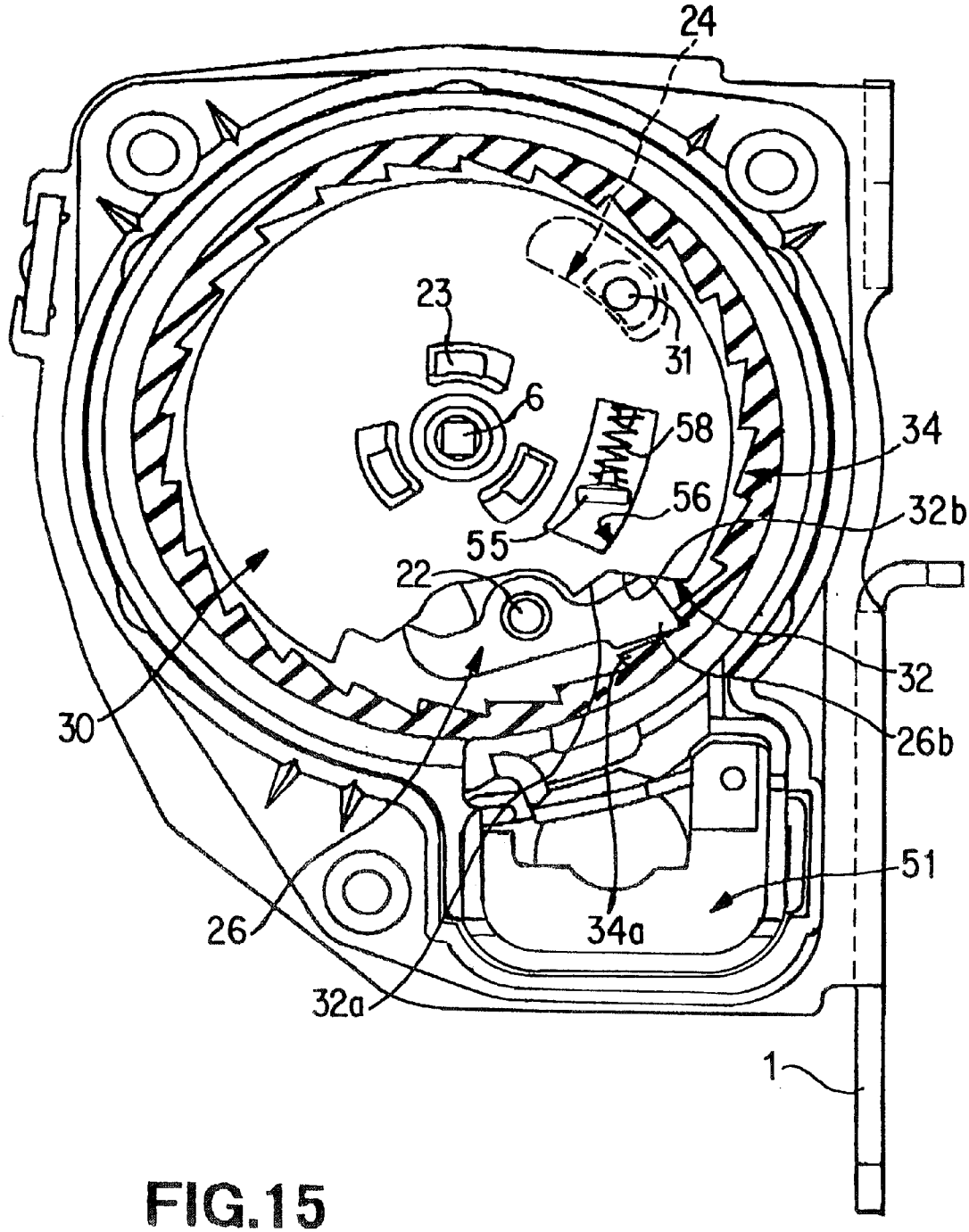

FIG.15

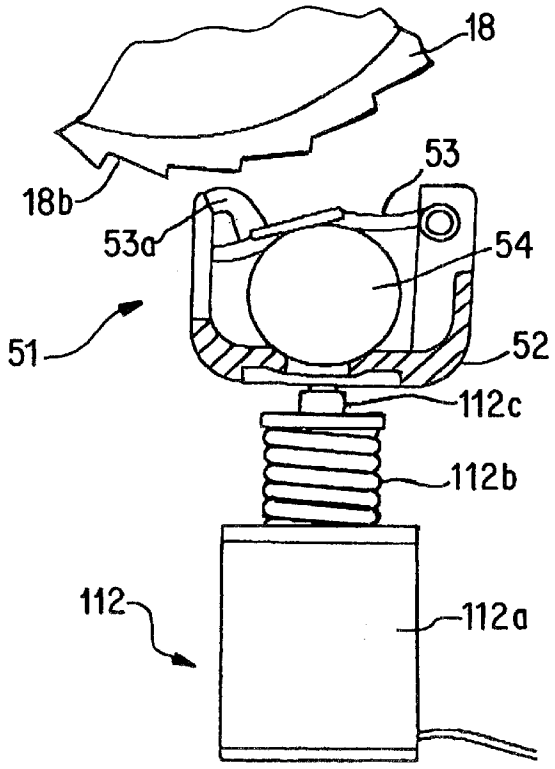
18
53
18b
53a
54
51
52
112c
112b
112
112a

FIG.16

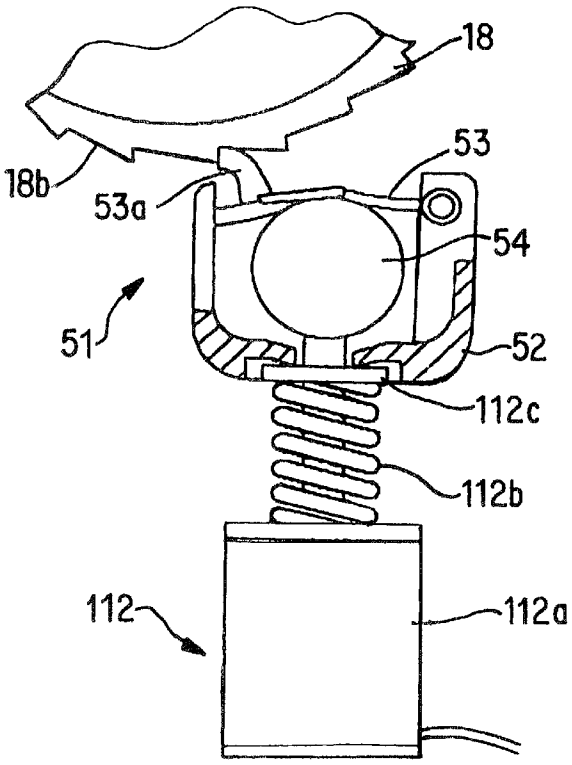
18
53
18b
53a
54
51
52
112c
112b
112
112a

FIG.17

FIG.18

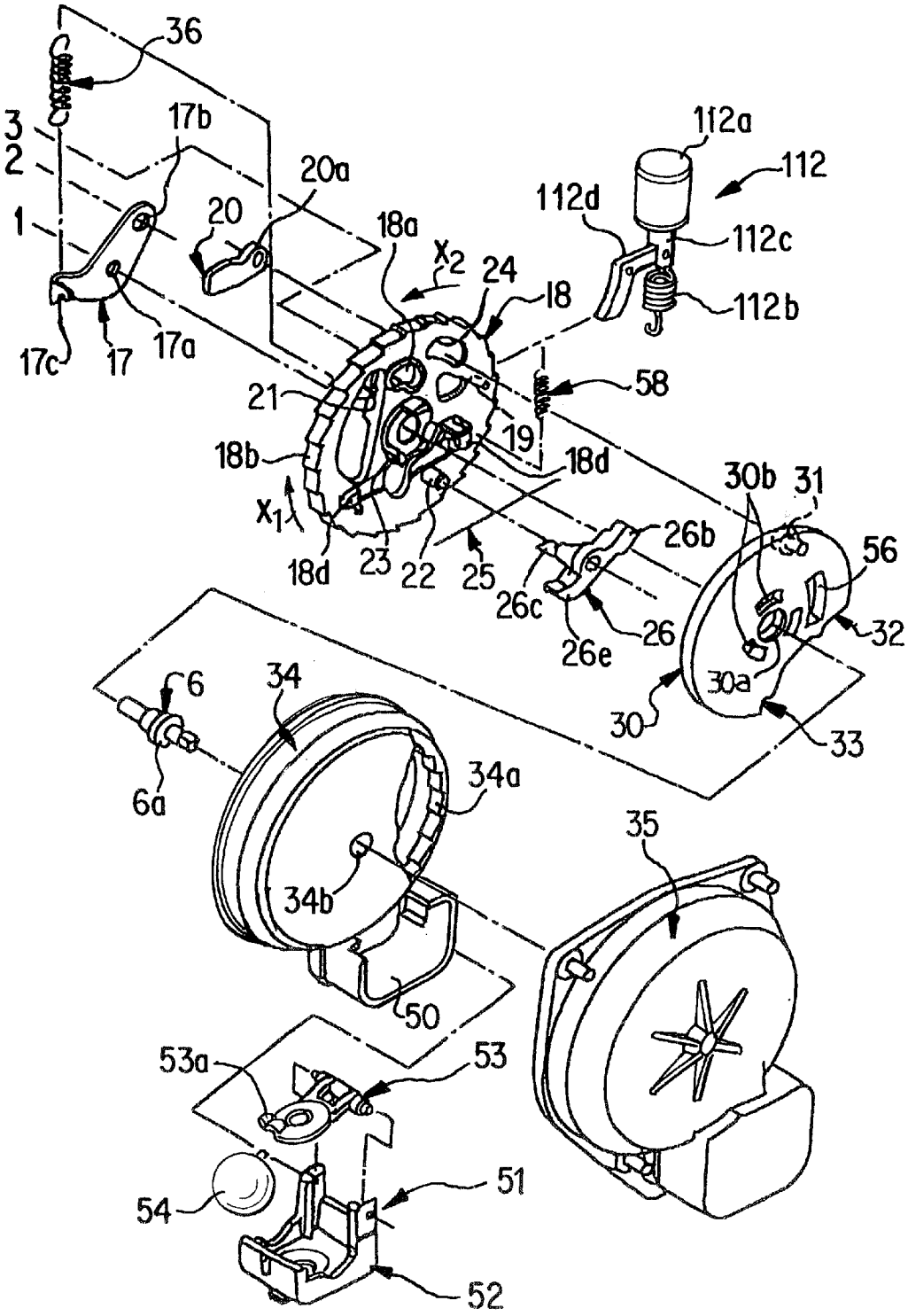
36
3
2
1
17b
20a
20
18a
X2
24
18
112a
112
112d
112c
112b
17c
17
17a
58
21
19
18b
18d
30b
31
X1
26b
56
18d
23
22
25
26c
26
32
26e
30a
6
34
30
33
6a
34a
35
34b
50
53a
53
51
54
52

FIG. 19

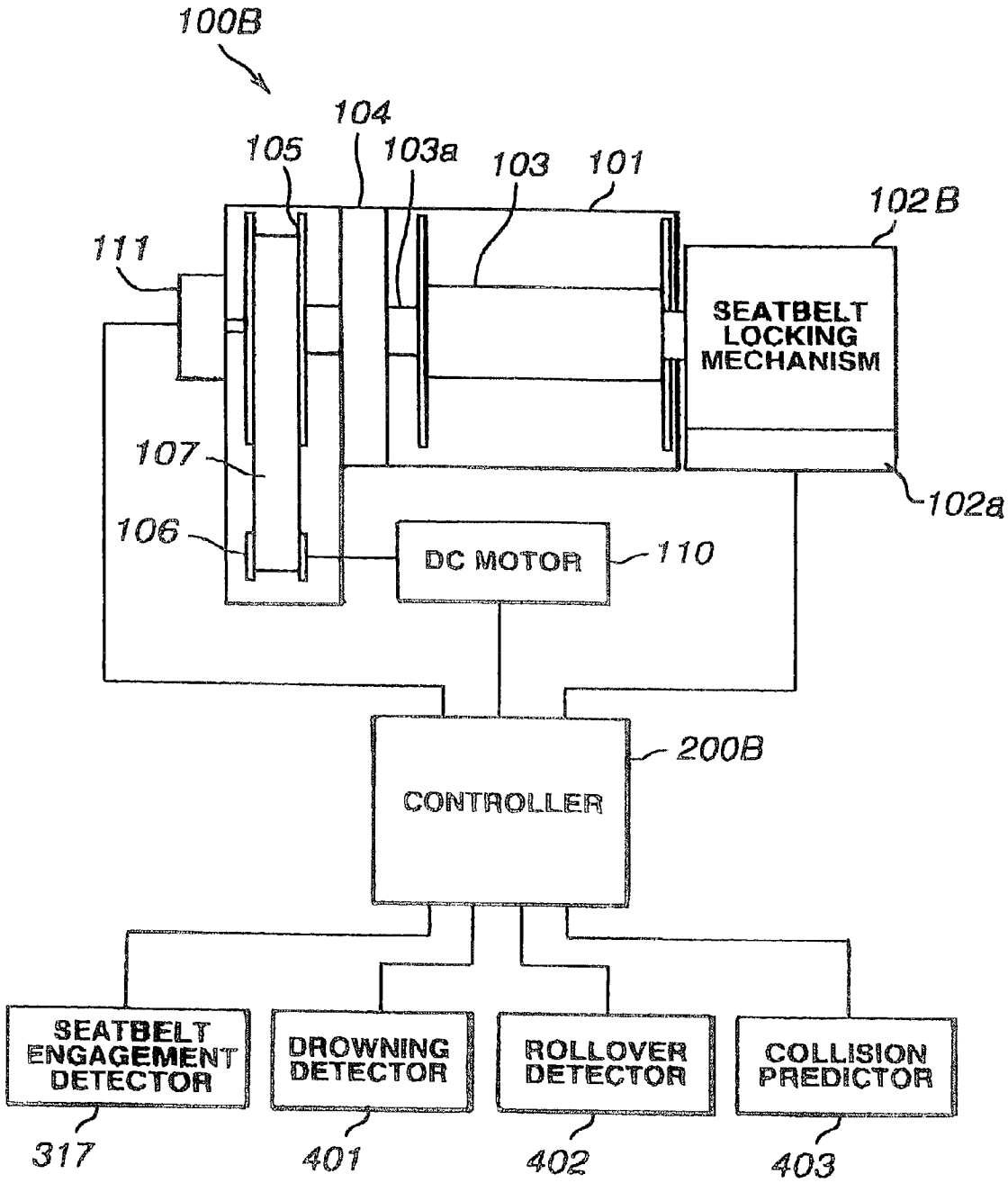
100B
104
105
103a
103
101
102B
111
SEATBELT LOCKING MECHANISM
107
102a
106
DC MOTOR
110
200B
CONTROLLER
SEATBELT ENGAGEMENT DETECTOR
DROWNING DETECTOR
ROLLOVER DETECTOR
COLLISION PREDICTOR
317
401
402
403

FIG.20

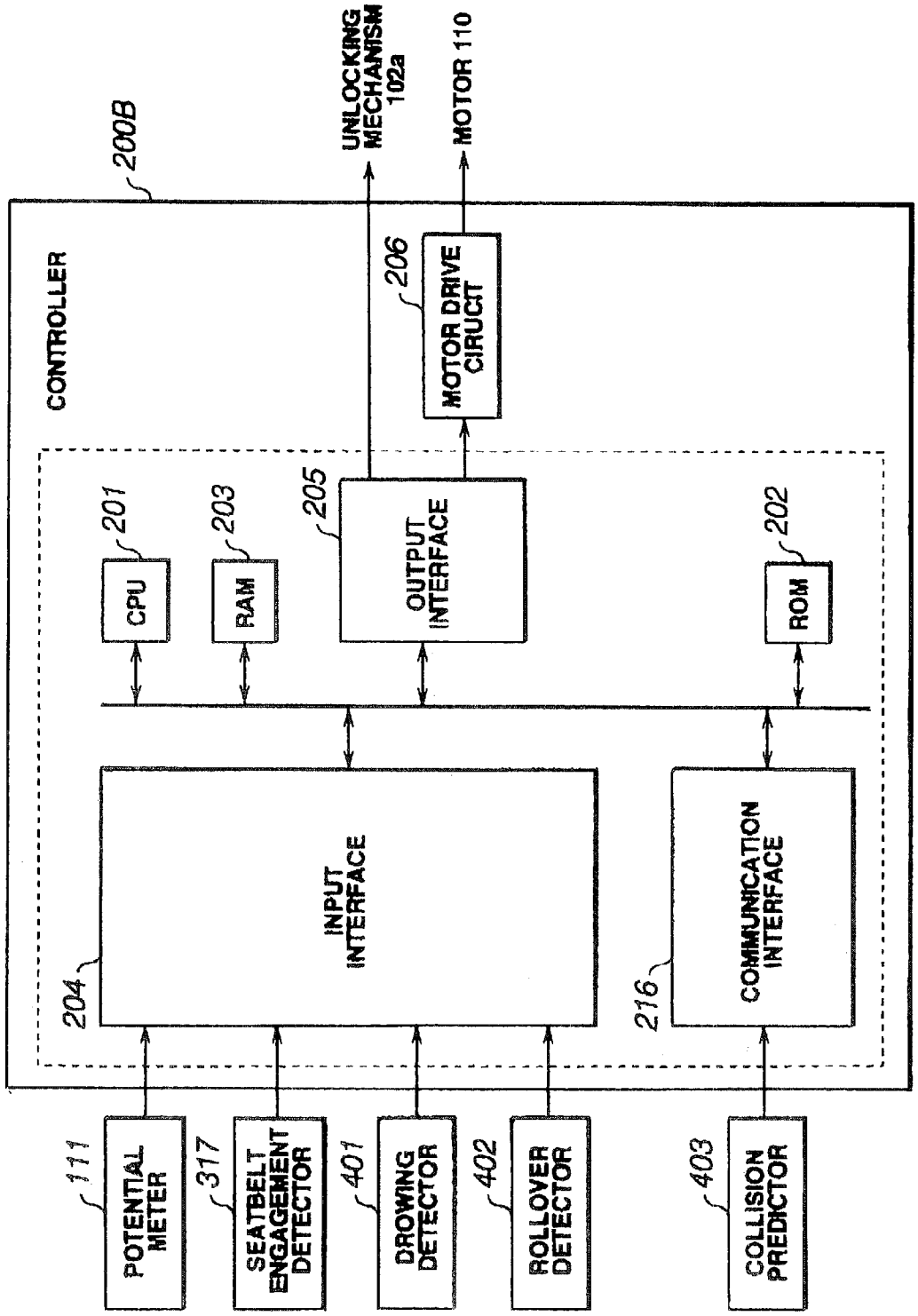
200B
CONTROLLER
UNLOCKING MECHANISM 102a
MOTOR 110
206
MOTOR DRIVE CIRUCIT
201
CPU
203
RAM
205
OUTPUT INTERFACE
202
ROM
204
INPUT INTERFACE
216
COMMUNICATION INTERFACE
111
POTENTIAL METER
317
SEATBELT ENGAGEMENT DETECTOR
401
DROWING DETECTOR
402
ROLLOVER DETECTOR
403
COLLISION PREDICTOR

FIG.22

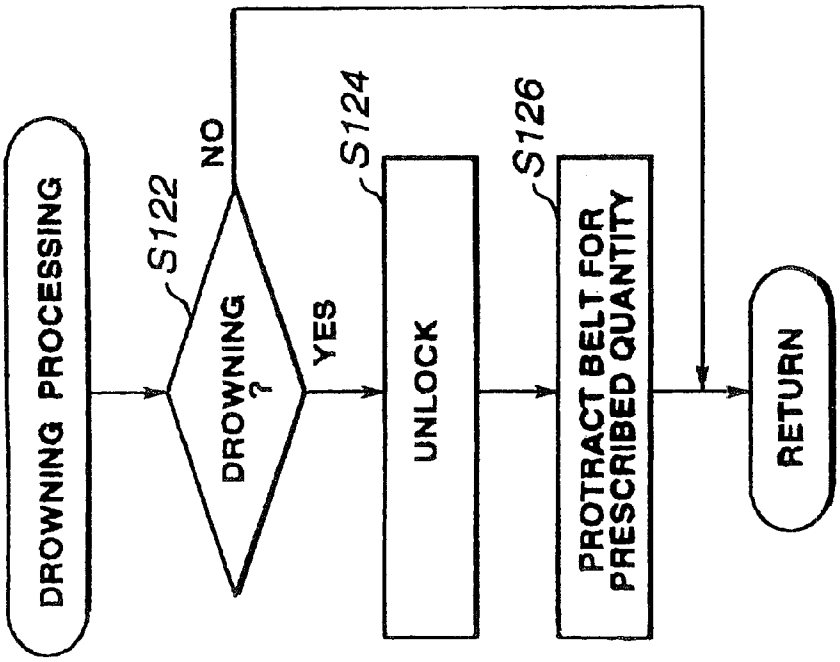
DROWNING PROCESSING
S122
DROWNING ?
NO
YES
S124
UNLOCK
S126
PROTRACT BELT FOR PRESCRIBED QUANTITY
RETURN

FIG.21

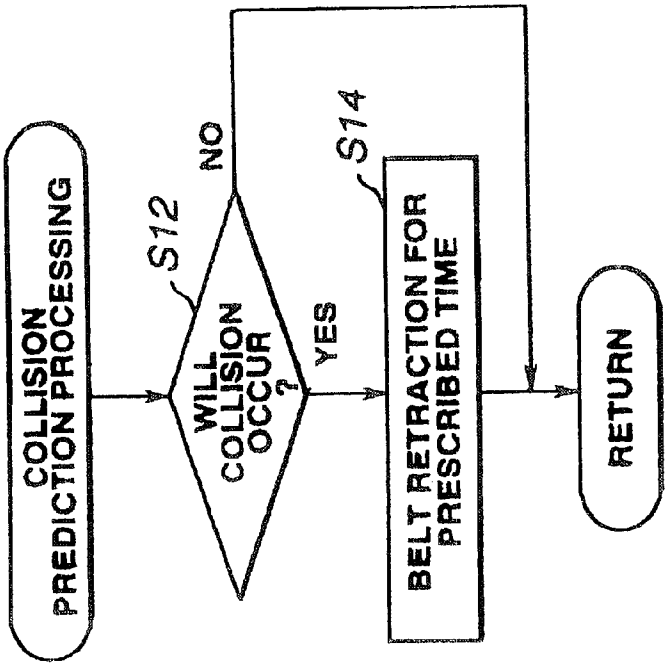
COLLISION PREDICTION PROCESSING
S12
WILL COLLISION OCCUR ?
NO
YES
S14
BELT RETRACTION FOR PRESCRIBED TIME
RETURN

FIG.23

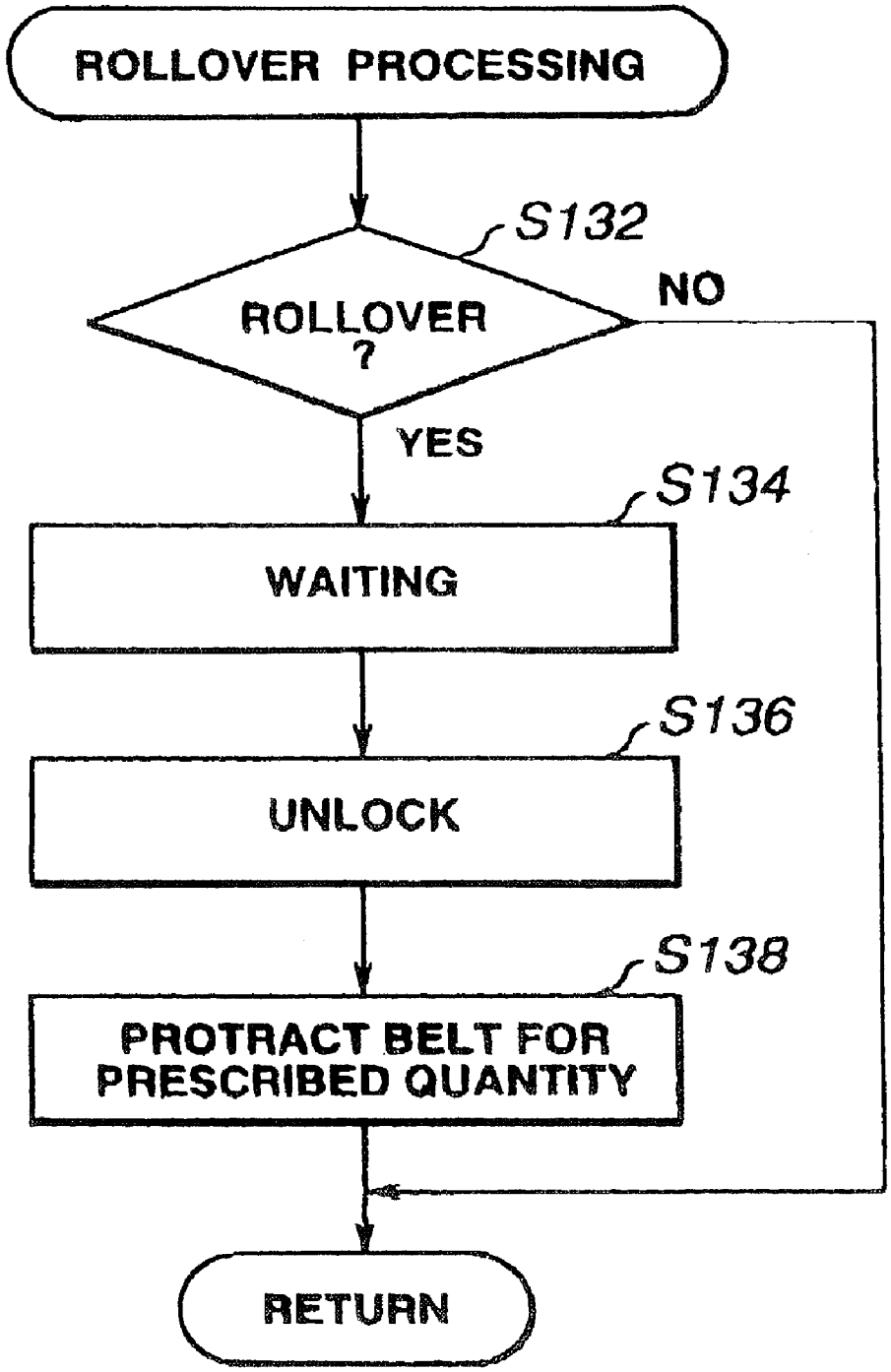
ROLLOVER PROCESSING
S132
ROLLOVER ?
NO
YES
S134
WAITING
S136
UNLOCK
S138
PROTRACT BELT FOR PRESCRIBED QUANTITY
RETURN

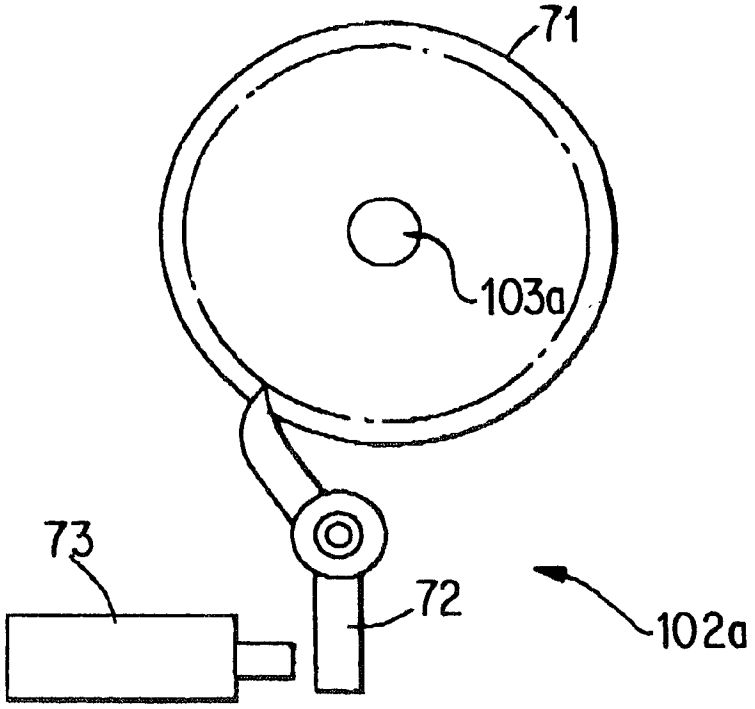

FIG.24

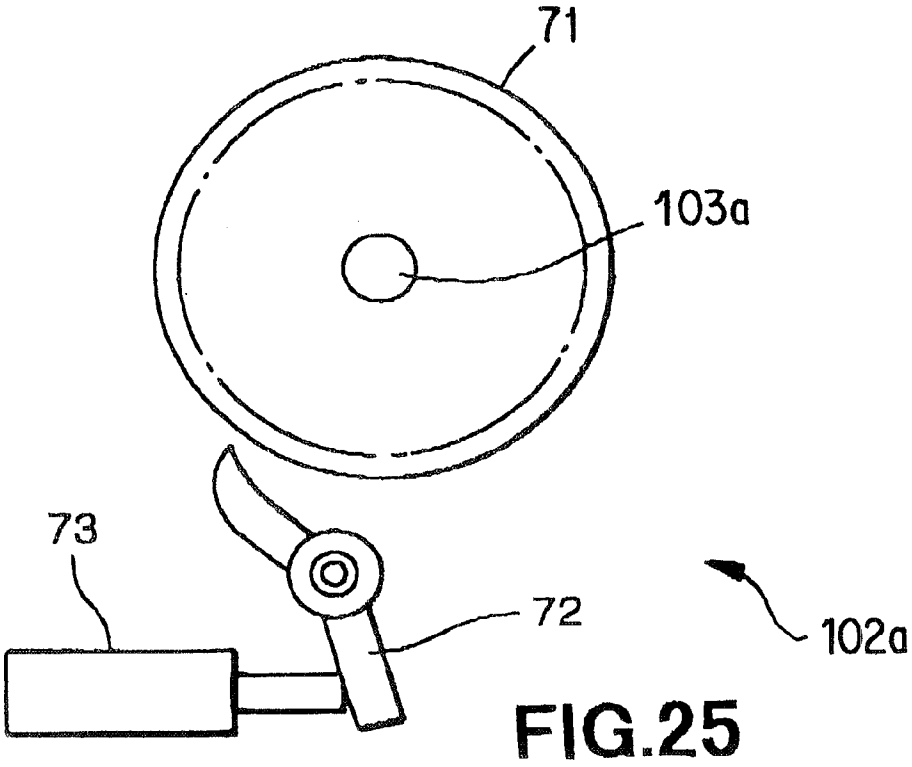

FIG.25

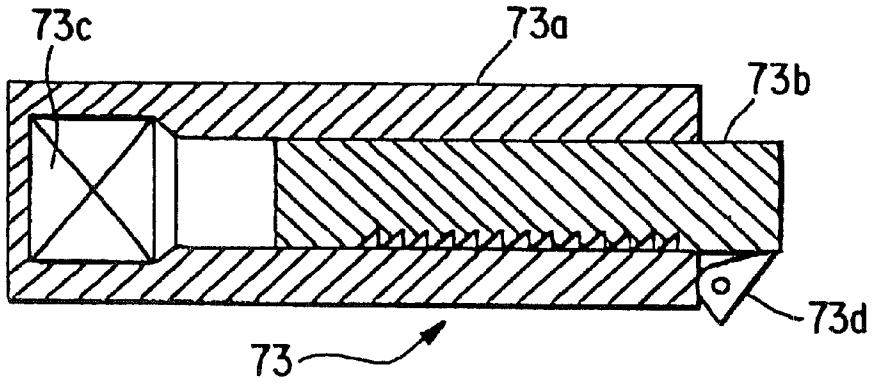

FIG.26

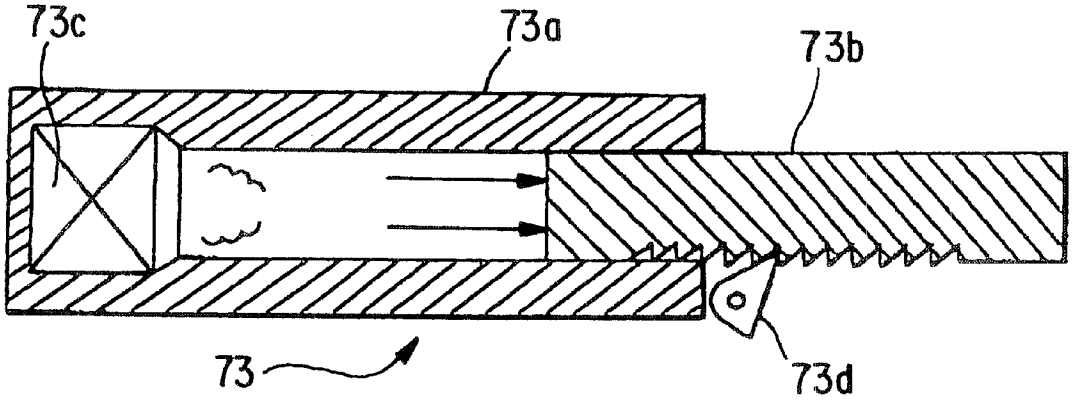

FIG.27

FIG.28

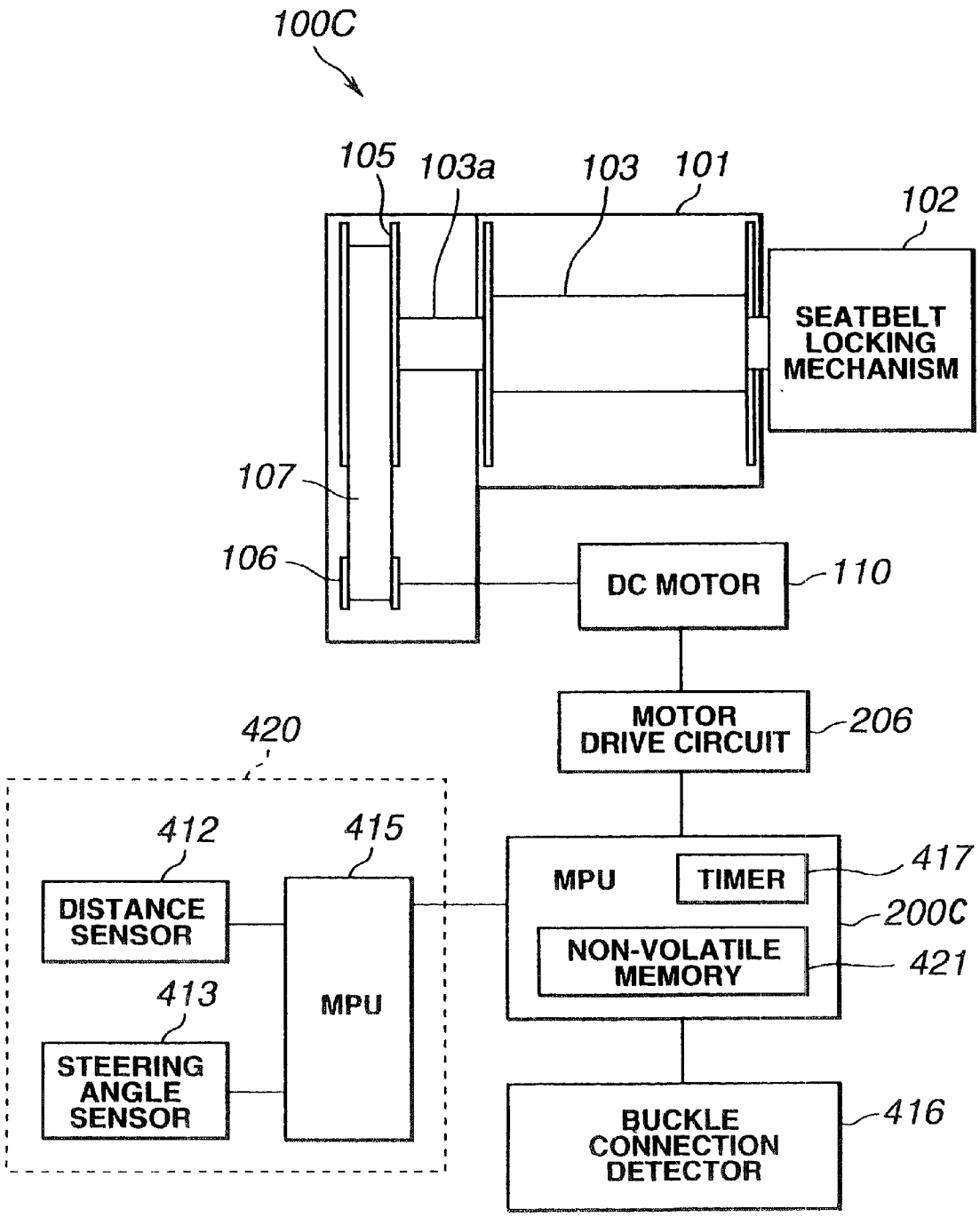
100C
105
103a
103
101
102
SEATBELT LOCKING MECHANISM
107
106
DC MOTOR
110
MOTOR DRIVE CIRCUIT
206
420
412
415
DISTANCE SENSOR
MPU
413
STEERING ANGLE SENSOR
MPU
TIMER
417
200C
NON-VOLATILE MEMORY
421
BUCKLE CONNECTION DETECTOR
416

FIG.29

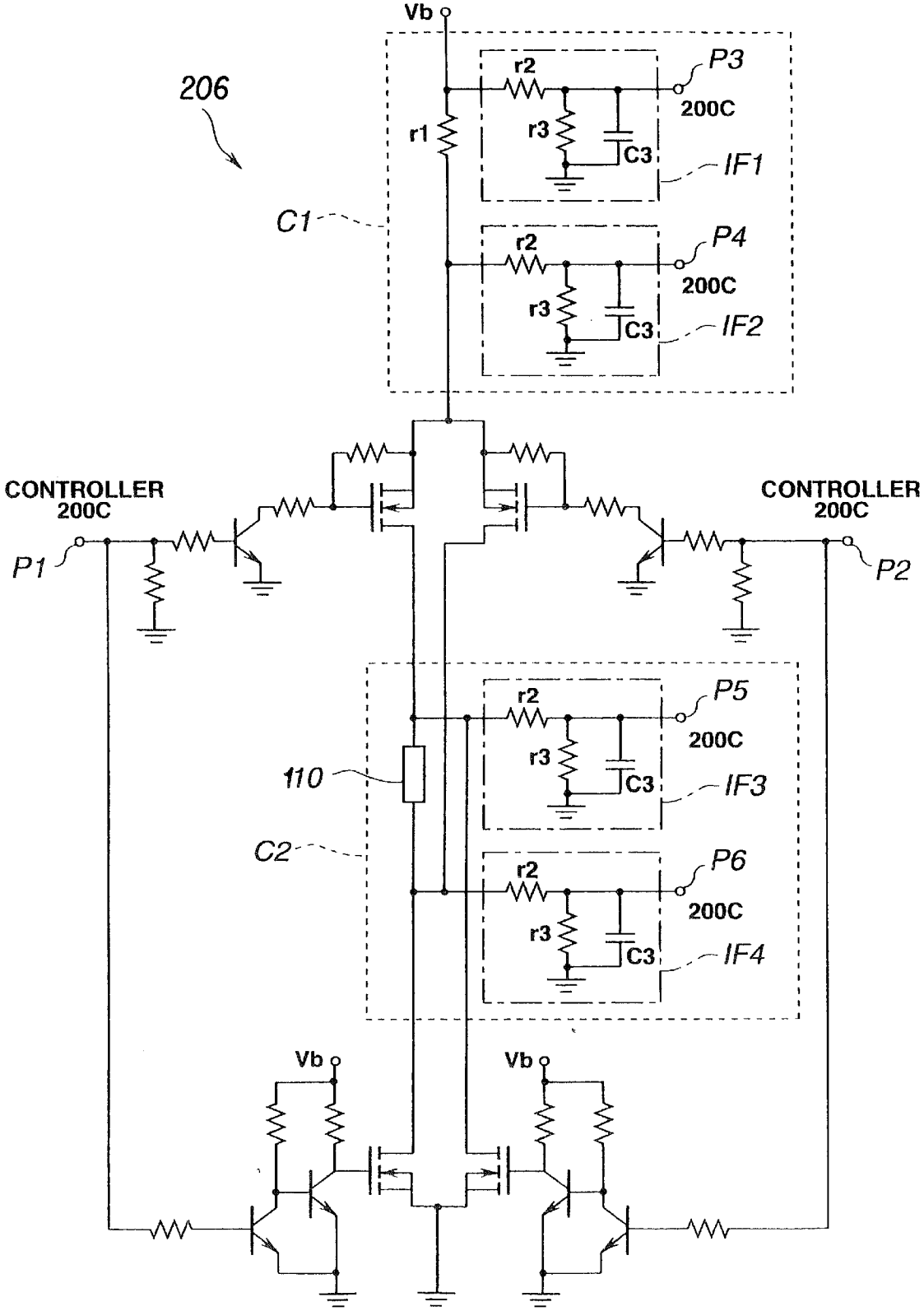
Vb
206
r1
r2
r3
C3
P3
200C
IF1
C1
P4
IF2
CONTROLLER
200C
P1
P2
P5
IF3
110
C2
P6
IF4

FIG.30

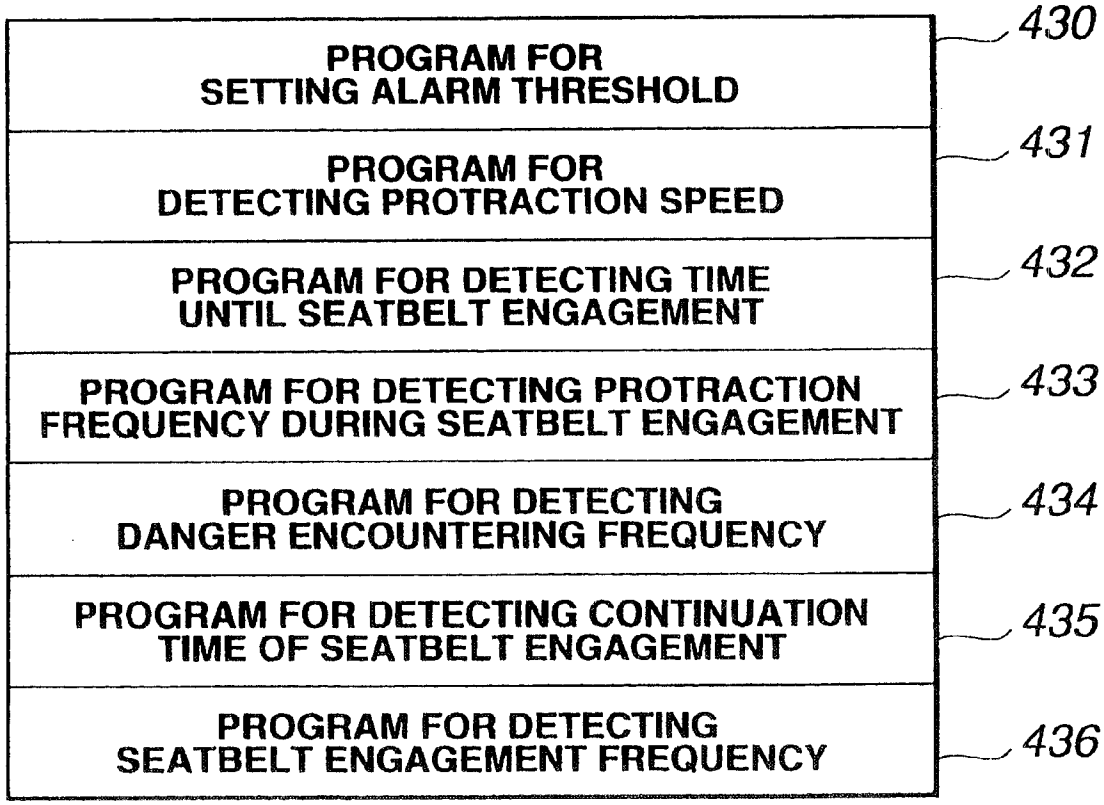
PROGRAM FOR SETTING ALARM THRESHOLD
430
PROGRAM FOR DETECTING PROTRACTION SPEED
431
PROGRAM FOR DETECTING TIME UNTIL SEATBELT ENGAGEMENT
432
PROGRAM FOR DETECTING PROTRACTION FREQUENCY DURING SEATBELT ENGAGEMENT
433
PROGRAM FOR DETECTING DANGER ENCOUNTERING FREQUENCY
434
PROGRAM FOR DETECTING CONTINUATION TIME OF SEATBELT ENGAGEMENT
435
PROGRAM FOR DETECTING SEATBELT ENGAGEMENT FREQUENCY
436

FIG.31

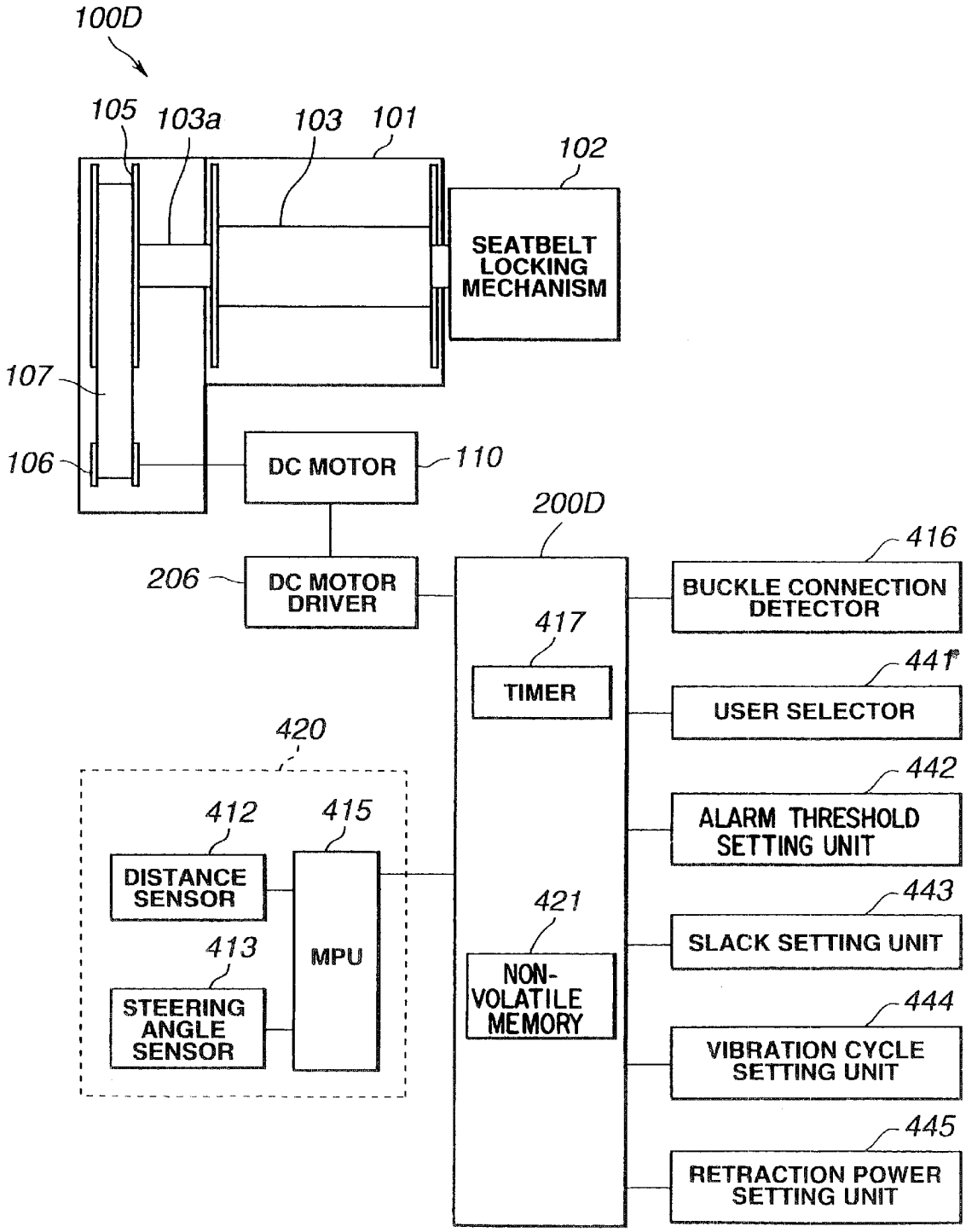
100D
105
103a
103
101
102
SEATBELT LOCKING MECHANISM
107
106
DC MOTOR
110
200D
206
DC MOTOR DRIVER
416
BUCKLE CONNECTION DETECTOR
417
TIMER
441
USER SELECTOR
420
442
ALARM THRESHOLD SETTING UNIT
412
415
DISTANCE SENSOR
MPU
421
443
SLACK SETTING UNIT
413
NON-VOLATILE MEMORY
STEERING ANGLE SENSOR
444
VIBRATION CYCLE SETTING UNIT
445
RETRACTION POWER SETTING UNIT

SEATBELT DEVICE

This application is a division of application Ser. No. 09/421,872, filed Oct. 21, 1999, now U.S. Pat. No. 6,332, 629.

BACKGROUND OF THE INVENTION

1. Field of the Invention

The present invention generally relates to a seatbelt device for securing a passenger to a seat and ensuring the safety of such passenger, and particularly relates to a seatbelt device comprising a retractor for retracting and protracting a webbing with a power source such as a motor.

2. Description of the Related Art

A seatbelt device comprising a retractor for retracting and protracting a webbing has been conventionally known, for example, as described in U.S. Pat. No. 4,511,097. This typical seatbelt device proposes a combination with a motor for protracting and retracting the webbing.

However, if an emergency situation occurs (disconnection within the motor, for example) and a drive current cannot be supplied to the motor of the seatbelt device, no driving force or braking force will be generated, and it is possible that the motor will slip. In such case, after the webbing is fastened, the webbing can be protracted but will not be automatically retracted, and thus, the slack in the webbing is not removed. Driving a vehicle with a slack in the webbing is undesirable as the passenger's security cannot be sufficiently ensured.

The respective controls mentioned above are performed uniformly without consideration to the different uses of the seatbelt by various passengers, and are not necessarily optimum for each passenger. Thus, a typical conventional passenger security/protection device for vehicles could not, in a sufficient manner, provide a comfortable seatbelt-wearing environment or appropriately secure and protect the passenger.

Although a seatbelt is for securing and protecting the passenger upon a vehicle accident, it is also desired that such seatbelt be disengaged immediately after the accident so that the passenger may escape from such vehicle.

Conventionally, when a vehicle accidentally went underwater, the passenger would remove the webbing from the buckle and open the door or window to escape from such vehicle. In this case, the passenger may instantaneously panic, and try to escape without disengaging his/her seatbelt, and the seatbelt device will therefore hinder the passenger's escape. When a vehicle accidentally rolls over, also, the passenger may panic and try to escape without disengaging the seatbelt.

Upon rescuing a passenger from the rolled over vehicle, it is difficult to disengage the buckle of the seatbelt device as it is mounted on the central side of the vehicle interior. Thus, the webbing is often cut in order to rescue the passenger.

Thereby, for example, proposed in Japanese Patent Laid-Open Publication No. Sho 59(1984)-40964 is to provide a buckle disengagement device for automatically disengaging the buckle in order to let the passenger free. According to this structure, it is possible to disengage the buckle in emergency situations.

Nevertheless, if the buckle is disengaged due to a misdetection, the passenger must go through the trouble of reconnecting the tongue plate, which the webbing passes through, to the buckle.

SUMMARY OF THE INVENTION

The present invention was devised in order to resolve the aforementioned conventional problems and an object thereof is to provide a passenger security/protection device for vehicles capable of realizing a comfortable seatbelt-wearing environment as well as appropriately securing and protecting a passenger.

Another object of the present invention is to provide a seatbelt device capable of realizing the immediate escape or rescue of the passenger after a vehicle accident.

A further object of the present invention is to provide a seatbelt device capable of realizing extra safety and a swift escape of the passenger by protracting the seatbelt in accordance with the state of the vehicle accident.

In order to achieve the aforementioned objects, the present invention provides a seatbelt device comprising: a retractor which uses a motor for retracting and protracting a webbing that secures a passenger to a seat; and a controller for rotating the motor in order to at least retract the webbing; wherein the controller changes the protraction mode of the webbing in accordance with the state of the webbing fastened by the passenger.

The retractor comprises: a reel to which the webbing is wrapped around; a motor for rotating the reel via a power transmitting mechanism; a rotation detection element for detecting the rotation of the reel; a locking mechanism for locking the rotation of the reel in emergency situations; wherein, when the controller does not detect the rotation of the reel after supplying drive signals to the motor, the controller supplies activation signals to the locking mechanism ordering the activation of the locking mechanism.

When the webbing cannot be retracted with a motor, this structure minimizes the possibility of a passenger wearing a loose webbing (seatbelt) by preventing the protraction of the webbing.

The controller controls the drive of the motor and alters the protraction mode of the webbing based on at least one condition among the slack, tension and retraction power of the webbing, and vibration pattern of the webbing for determining the generation of an alarm.

The controller comprises an alteration element for altering, in accordance with the state of webbing fastened by the passenger, at least one condition among the slack, tension and retraction power of the webbing, and vibration pattern of the webbing for determining the generation of an alarm.

According to this structure, since at least one condition among the slack, tension and retraction power of the webbing, and vibration pattern of the webbing for determining the generation of an alarm is altered in accordance with the state of webbing fastened by the passenger, it is possible to provide a comfortable seatbelt-wearing environment and to appropriately secure and protect the passenger.

Moreover, the seatbelt device according to the present invention may further comprise an adjustment element for adjusting the contents altered by the alteration element.

Even if the contents altered by the alteration element do not suit the passenger, this structure enables the adjustment of such altered contents with the adjustment element. Thus, it is possible to provide an optimum seatbelt-wearing environment for each passenger and to appropriately secure and protect the passenger at all times.

The seatbelt device according to the present invention may further comprise an accident detection element for detecting the state of the vehicle accident, wherein the controller alters the protraction mode of the webbing with a motor in correspondence with the state of accident.

With this structure, it is possible to secure the passenger to his/her seat upon removing the slack in the webbing

before the accident, and to loosen the webbing in an appropriate timing in correspondence with the state of the vehicle after the accident. Thus, this is preferable as the passenger's safety and ease of escape are provided.

The locking mechanism may include: a mechanical locking mechanism for mechanically locking the rotation of the reel; and at least (a) webbing acceleration sensor for activating the mechanical locking mechanism in correspondence with a sudden protraction of the webbing; or (b) a vehicle acceleration sensor for activating the mechanical locking mechanism upon considerable deceleration.

The webbing acceleration sensor and vehicle acceleration sensor may respectively comprise an electromagnetic actuator for compulsorily activating the mechanical locking mechanism in correspondence with the supply of activation signals.

The controller may be structured so that it does not activate the electromagnetic actuator when the reel is rotating due to the passenger protracting the webbing.

With this structure, it is possible to prevent the hindrance of the protraction of the webbing necessary for fastening the webbing.

The electromagnetic actuator may include: a mechanical urging element for providing a mechanical urge to the actuator in order to activate the webbing acceleration sensor or vehicle acceleration sensor; and an electromagnetic force generating element for generating electromagnetic force which suppresses the mechanical urge; wherein the electromagnetic actuator maintains the electromagnetic force in a stationary state.

Even if the power source to the motor or seatbelt device is cut off due to some problem, this structure activates the mechanical locking mechanism of the reel (i.e., webbing) with the mechanical urging element upon the termination of the electromagnetic force. Thereby, the locking of the webbing is secured even if irregularities occur to the electrical system.

The rotation detection element may be structured from a potential meter connected to the reel.

With this structure, it is possible to learn the rotation quantity from the standard position and estimate the protraction quantity, retraction quantity, rotation quantity of the reel (reel shaft), etc.

The controller is also capable of protracting the seatbelt with the motor after a predetermined time elapses from the detection of the accident.

The accident detection element comprises a drowning detection element for detecting that the vehicle has drowned, and the controller is capable of rotating the motor in the protracting direction in correspondence with the detection of this drowning.

The detection element comprises a rollover detection element for detecting that the vehicle has rolled over, and the controller is capable of rotating the motor in the protracting direction in correspondence with the detection of this rollover after a predetermined time elapses.

The predetermined time may be set to a time required for the abatement of the impact incurred to the rolled over vehicle.

BRIEF DESCRIPTION OF THE DRAWINGS

FIG. **1** is a diagram explaining the structure of the seatbelt device according to the first embodiment of the present invention;

FIG. **2** is a diagram explaining the structure of the retractor according to the first embodiment;

FIG. **3** is a functional block diagram explaining the structure of the controller according to the first embodiment;

FIG. **4** is a diagram explaining the potential meter according to the first embodiment;

FIG. **5** is a circuit diagram showing a structural example of the drive circuit of the motor according to the first embodiment;

FIG. **6** is a flowchart explaining the operation of the controller according to the first embodiment;

FIG. **7** is a perspective view showing an example of one portion of the webbing retractor according to the first embodiment;

FIG. **8** is a perspective view showing an example of the other portions of the webbing retractor according to the first embodiment;

FIG. **9** is a sectional view in the rotational axial direction of the ratchet wheel of the locking mechanism shown in FIG. **13**;

FIG. **10** is a diagram explaining the activation of the locking mechanism caused by a rapid protraction of the webbing (webbing acceleration) according to the first embodiment;

FIG. **11** is a diagram explaining the lock arm according to the first embodiment;

FIG. **12** is a diagram explaining the inertia plate according to the first embodiment;

FIG. **13** is a diagram explaining the activation of the locking mechanism caused by the webbing acceleration according to the first embodiment;

FIG. **14** is a diagram explaining the activation of the locking mechanism caused by the webbing acceleration according to the first embodiment;

FIG. **15** is a diagram explaining the activation of the locking mechanism caused by the webbing acceleration according to the first embodiment;

FIG. **16** is a diagram explaining the operation of the electromagnetic actuator (unlocked state) according to the first embodiment;

FIG. **17** is a diagram explaining the operation of the electromagnetic actuator (locked state) according to the first embodiment;

FIG. **18** is a diagram explaining an example of another electromagnetic actuator;

FIG. **19** is a diagram explaining the retractor according to the second embodiment of the present invention;

FIG. **20** is a block diagram explaining the structure of the controller according to the second embodiment;

FIG. **21** is a flowchart explaining the belt-retraction processing of the CPU in response to a collision prediction according to the second embodiment;

FIG. **22** is a flowchart explaining the belt-protraction processing of the CPU in response to the drowning of a vehicle according to the second embodiment;

FIG. **23** is a flowchart explaining the belt-protraction processing of the CPU in response to the rollover of a vehicle according to the second embodiment;

FIG. **24** is a diagram explaining an example of the unlocking mechanism (lock activated state) according to the second embodiment;

FIG. **25** is a diagram explaining an example of the unlocking mechanism (unlocked state) according to the second embodiment;

FIG. **26** is a sectional view explaining the inactive state of the pole actuator according to the second embodiment;

FIG. **27** is a sectional view explaining the active state of the pole actuator according to the second embodiment;

FIG. **28** is a diagram explaining the retractor according to the third embodiment of the present invention;

FIG. **29** is a circuit diagram of the motor drive circuit according to the third embodiment;

FIG. **30** is a diagram showing an example of a control program executed by the controller according to the third embodiment; and

FIG. **31** is a diagram explaining the retractor according to the fourth embodiment of the present invention.

DETAILED DESCRIPTION OF THE PREFERRED EMBODIMENTS

(First Embodiment)

The seatbelt device according to the first embodiment of the present invention is explained with reference to the relevant drawings.

FIG. **1** shows the seatbelt device of the first embodiment. The seatbelt device is structured of an electromotive retractor **100**A for retracting a webbing **302** which secures the passenger to a seat **301**, a through-anchor **303** for folding back the webbing near the passenger's shoulder, a tongue plate **305** to which the webbing passes through and which engages with a buckle **304** arranged at the passenger's abdominal region, an anchor **306** for securing one end of the webbing **302** to the vehicle, a switch **307** built inside the buckle, a controller **200**A (explained later, refer to FIG. **2**), etc.

FIG. **2** is a diagram explaining the outline of the structure of the retractor **100**A. In FIG. **2**, the retractor **100**A comprises a frame **101**. Rotatably provided to this frame **101** are a reel **103** for winding the webbing **302** (refer to FIG. **1**) and a reel shaft **103***a* which is connected to the reel **103** and is the central axis of the reel rotation.

Secured to the right end of the reel shaft **103***a* is a seatbelt locking mechanism **102** for locking the webbing when a prescribed deceleration works on a vehicle or when the webbing **302** is protracted at a prescribed acceleration. Further provided to the locking mechanism **102** is an electromagnetic actuator **112** explained later for compulsorily activating such locking mechanism **102**. The activation of the electromagnetic actuator **112** is controlled by the output of the controller **200**A explained later.

Provided to the left end of the reel shaft **103***a* are a pretensioner **104**, pulley **105**, and potential meter **111**. The pretensioner **104** activates pursuant to the output of the collision detector not shown, rotates the reel shaft **103***a* in the retracting direction of the webbing **302**, and secures the passenger to the seat by compulsorily retracting the webbing **302**. The pretensioner **104** may be, for example, a powder pretensioner, and is structured of a gas generator, a cylinder for sealing the gas generated by this gas generator, a piston which moves within this cylinder by gas pressure, a timing belt (as a power transmitting mechanism) for converting this piston movement into a rotary motion of the reel shaft **103***a* via the clutch mechanism, etc.

The pulley **105** secured to the reel shaft **103***a* is connected to a pulley **106** secured to the axis of the direct current (DC) motor **110** via the timing belt **107**. A prescribed number of outer gear teeth are formed respectively on the outer periphery of the pulleys **105**, **106**, and a prescribed number of inner gear teeth are formed on the inner periphery of the belt **107**. The respective gear teeth of the pulley **105** of the reel shaft **103***a*, the pulley **106** of the motor, and the timing belt **107** are engaged with each other in proper quantities, and the rotation of the motor **110** is transmitted to the reel shaft **103***a*. The motor **110** is secured to the frame **101** in at least two points, and is driven by the output of the controller **200**A.

The potential meter **111** provided on the left end of the reel shaft **103***a* is, as shown in FIG. **4**, structured of a resistor for applying voltage to both ends thereof, and a slider which interlocks with the rotation of the reel shaft **103***a*. This potential meter **111** outputs to the controller **200**A a voltage value corresponding to the rotation quantity from the standard position of the reel shaft **103***a*.

FIG. **3** is a functional block diagram explaining the structural outline of the controller **200**A. As shown in FIG. **3**, the controller **200**A is structured of a microcomputer system. The CPU **201** loads control programs and data retained in the ROM **202** to the work area of the RAM **203**, and controls the operation of the DC motor **110** and the solenoid as the electromagnetic actuator **112**. The output voltage of the aforementioned potential meter **111** is A/D converted in prescribed cycles by the input interface **204**.

The input interface **204** has a CPU built therein, and monitors the converted output voltage data. For example, with the difference between the present and previous output voltage data, it judges the rotational state of the reel shaft **103***a* and sets a "shaft rotating" flag to the flag area of the RAM **203**. With the difference between the present and previous output voltage value being positive or negative, the input interface **204** further sets a "protraction" flag or a "retraction" flag of the webbing **302** to the flag area of the RAM **203**. Moreover, it writes the output voltage data to the rotation quantity area of the RAM **203** with DMA operation. The input interface **204** sets an engagement/disengagement flag of the seatbelt device to the flag area of the RAM **203** upon receiving the open/close output of the buckle switch **307** which is built in the buckle of the seatbelt device and which generates an output in correspondence to the engagement/disengagement of the seatbelt device.

When prescribed conditions set to the control program are fulfilled, the CPU **201** provides to the output interface **205** a normal rotation order, reverse rotation order, or drive suspension order for the DC motor **110**.

The output interface **205** generates gate signals G1, G2 in correspondence to these orders and supplies such signals to the motor drive circuit **206**. G1 and G2 are set as "H" and "L" in response to a normal rotation order, as "L" and "H" in response to a reverse rotation order, and as "L" and "L" in response to a drive suspension order, respectively.

FIG. **5** is circuit diagram showing the structural example of the motor drive circuit **206**. A transistor bridge circuit is structured of four transistors, namely, PNP transistors Q1 and Q2, and NPN transistors Q3 and Q4. Emitters of transistors Q1 and Q2 are connected, and a power source Vc is supplied to this connection point. Emitters of transistors Q3 and Q4 are also connected, and a ground is supplied to this connection point. The collector of transistor Q1 and the collector of transistor Q3 are connected via diode D1. The collector of transistor Q2 and the collector of transistor Q4 are connected via diode D2. The base of transistor Q1 and the collector of transistor Q4 are connected via the urge resistance R1. The base of transistor Q2 and the collector of transistor Q3 are connected via the urge resistance R2. A DC motor M is connected mutually between the respective collectors of transistors Q1 and Q2.

In the aforementioned structure, when a normal rotation order signal (G1="H", G2="L") is supplied to the respective gates of transistors Q3 and Q4 from the output interface **205**, transistor Q3 becomes conductive and transistor Q4 becomes non-conductive. The collector of transistor Q3

becomes a ground level by conductivity, urges the base of transistor Q2 to a low level (approximate ground level) via resistance R2, and makes transistor Q2 conductive. The collector of transistor Q4 becomes an approximate power source Vc level, urges the base of transistor Q2 to a high level via resistance R1, and makes transistor Q1 non-conductive. As a result thereof, a current path is formed in the orderly direction of the ground path of power source Vc, transistor Q2, motor M, diode D1, and transistor Q3, and the motor M rotates in the direction for retracting the webbing.

When a reverse rotation order signal (G1="L", G2="H") is supplied to the respective gates of transistors Q3 and Q4 from the output interface **205**, transistor Q3 becomes non-conductive and transistor Q4 becomes conductive. The collector of transistor Q4 becomes a ground level, urges the base of transistor Q1 to a low level via resistance R1, and makes transistor Q1 conductive. The collector of transistor Q3 becomes an approximate power source Vc level, urges the base of transistor Q2 to a high level via resistance R2, and makes transistor Q2 non-conductive. As a result thereof, a current path is formed in the orderly reverse direction of the ground path of power source Vc, transistor Q1, motor M, diode D2, and transistor Q3, and the motor M rotates in the direction for protracting the webbing.

When a drive suspension order signal (G1="L", G2="L") is supplied to the respective gates of transistors Q3 and Q4 from the output interface **205**, the NPN-type transistors Q3 and Q4 both become non-conductive. When transistor Q3 becomes non-conductive from a conductive state, the collector of transistor Q3 rises from a ground level to an approximate power source level, urges the base of transistor Q2 to a high potential, and interrupts transistor Q2 as well. Similarly, when transistor Q4 becomes non-conductive from a conductive state, the collector of transistor Q4 rises from a ground level to an approximate power source level, urges the base of transistor Q1 to a high potential, and interrupts transistor Q1 as well. Accordingly, when a drive suspension order is given, the respective transistors structuring the bridge become non-conductive.

Referring back to FIG. **3**, the CPU **201** provides to the output interface **205** an activation order of the solenoid as the actuator **112** when prescribed conditions for preventing the slack in the webbing **302** are fulfilled. The activation order set to the register flag of the output interface **205** is amplified by a power amplifier **207** from a logical level signal to a level capable of activating the solenoid, and then provided to such solenoid. By the operation of this solenoid, the actuator moves, and the locking mechanism explained later of the retractor **100**A is activated.

FIG. **6** is a flowchart explaining the operation of the CPU **201** of the controller **200**A.

By fulfilling the conditions such as the on state (buckle switch **307** in the closed state) of the seatbelt device fastening flag, the CPU **201** judges in prescribed intervals that the locking of the protraction of the webbing is under a permissible condition, and performs the subroutine (S**20**).

In a state wherein the DC motor **110** is not driven, the CPU **201** foremost judges the on/off of the "webbing protraction" flag of the flag register (flag area) of the RAM **203**. When the "webbing protraction" flag is "on" (S**22**; YES), the CPU **201** ends the routine without activating the locking mechanism as the webbing is being protracted by the passenger, and returns to the main program (S**36**). When the protraction of the webbing is not being conducted (S**22**; NO), the CPU **201** provides a reverse rotation order for the motor to the output interface **205** (S**24**). The output interface **205** provides a gate signal to the motor drive circuit **206** and, when the DC motor **110** rotates in the protracting direction, the potential meter **111** also rotates in the protracting direction. A protraction flag is set to the flag register by the input interface **204** which monitors the change in the output voltage of the potential meter **111**. The CPU **201** confirms (judges) the above (S**26**). When no protraction flag is set (S**26**; NO), in other words when the potential meter **111** is not rotating toward the protraction side, a malfunction of the DC motor **110**, retractor, and so on may be considered. The CPU **201** activates the solenoid via the output interface **205**, prevents the protraction of the webbing **302** by activating the locking mechanism, and prevents the increase of slack in the webbing **302**. The CPU **201** then sets a malfunction detection flag to the flag register (S**28**), suspends the rotation order for the motor **110** (S**34**), and returns to the main program (S**36**).

When the protraction flag is set to on (S**26**; YES), the CPU **201** judges the operation of the protracting direction of the webbing **302** as normal since the potential meter **111** is rotating in correspondence with the rotation order of the DC motor **110**. Next, the CPU **201** orders the normal rotation of the motor **110** to the output interface **205**. The output interface **205** provides a gate signal to the motor drive circuit **206** (S**30**).

When the DC motor **110** rotates in the retracting direction, the potential meter **111** also rotates in the retracting direction. A retraction flag is set to the flag register by the input interface **204** which monitors the change of output voltage of the potential meter **111**. Thereby, it is recognized that the webbing **302** has been retracted in correspondence with a normal rotation order of the DC motor **110** (S**32**; YES). As the operation is normal, the CPU **201** orders the output interface **205** to suspend the DC motor **110**, and the DC motor **110** is thereby suspended (S**34**). The CPU **201** returns to the main program thereafter (S**36**).

When the DC motor **110** does not rotate in the retracting direction or if there is some irregularity, the potential meter **111** will not rotate in the retracting direction. The input interface **204** does not set a retraction flag to the flag register as the output voltage of the potential meter **111** does not show a prescribed change. When the CPU **201** judges this, it is determined to be an error (S**32**; NO). When the DC motor **110** does not activate, the reel shaft **103***a* may slip and, in order to prevent this, the protraction locking mechanism of the webbing **302** is activated. The CPU **201** operates the solenoid via the output interface **205**, prevents the protraction of the webbing **302** by activating the locking mechanism of the webbing **302**, and prevents the increase of slack in the webbing **302**. The CPU **201** then sets the malfunction detection flag to the flag register (S**28**), suspends the rotation order of the motor **110** (S**34**), and returns to the main program (S**36**).

Like this, when a malfunction occurs in the retractor **100**A, it is possible to prevent the slack in the webbing by preventing the reel **103** from slipping.

FIGS. **7** through **18** are exploded perspective views and vertical section views of principle portions explaining mainly the seatbelt locking mechanism (reel mechanical locking mechanism, webbing acceleration sensor, vehicle deceleration sensor) and the electromagnetic actuator **112** of the retractor **100**A. Incidentally, a pretensioner is not mounted in the drawing shown in FIG. **7**. When necessary due to a special character of the vehicle, as shown in FIG. **2**, the pretensioner may be arranged between the retractor base **1** and the timing belt **15** shown in FIG. **7**.

Referring to FIGS. **7** through **12**, the retractor base **1** has an approximate C-shaped cross section, the opposing side

plates **1***a,* **1***b* respectively have provided thereto opposing winding shaft through holes, and the reel **3**, which is the winding shaft, for retracting the webbing **302** (refer to FIG. **1**) passes through the winding shaft through holes and is rotatably provided thereto by the winding shaft.

Inner gear teeth **2** are formed on the inner periphery of the winding shaft through holes provided to the side plate **1***a,* and a ring **4** is juxtaposed on the exterior of the winding shaft through holes. Drawing is performed on the inner periphery of the ring **4** and, when the ring **4** is secured to the exterior face of the side plate **1***a* by a rivet **40**, a gap in the axial direction between the inner gear teeth **2** and the inner peripheral edge of the ring **4** is formed.

Further, arranged on the side plate **1***a* of the base **1** is an emergency locking mechanism for preventing the protraction of the webbing **302** during emergency situations. Arranged on the side plate **1***b* of the base **1** are a pulley **105** connected to the axis **15***c* (corresponds to reel shaft **103***a*) driven by the DC motor **110** via the timing belt **107**, and a timing belt unit **15** including a potential meter **111** and the like. The reel **3** is a winding shaft having an approximate cylindrical shape and formed integrally with aluminum alloy and the like. A slit opening **28***a* in the diameter direction for passing the webbing end through and retaining such webbing end is provided to the barrel **28** to which the webbing **302** is wound. A separately formed flange **13** is mounted on the outer periphery of the reel **3**, and prevents the winding disorder of the webbing. The position of entrance and exit of the webbing **302** wound on the outer periphery of the reel **3** mounted on the retractor base **1** is restricted by such webbing being passed through the webbing guide **41** mounted on the upper part of the back side of the retractor base **1**.

Although a rotation spindle for rotatably supporting the reel **3** is protrusively provided to both ends of the reel **3**, a separately formed spindle pin **6** is press fitted to the sensor side end face of the reel **3** as the rotation spindle. Moreover, protrusively provided to the sensor side end face of the reel **3** is a spindle **7** for rotatably supporting a pole **16**, which is a locking member, in a rocking manner, capable of being engaged with the inner gear teeth **2** formed on the side plate **1***a*. Provided to the sensor side end face of the reel **3** is a pressure face **45** which determines the position of the pole back end portion **16***e* opposite to the rocking side end of the pole **16** when the pole **16** rockingly rotates in the engagement direction with the inner gear teeth **2** and, when a large load is inflicted upon the pole **16** between the inner gear teeth, receives such load.

On the sensor side end face of the reel **3**, provided is a stopper protrusion **8** for restricting the counterclockwise rotation of the rocking lever **20** supported in a rocking manner by the ratchet wheel **18**, which is the latch member of the lock activation element explained later. The convex portion **9** is a recess element for preventing a pull coil spring **36** which rotationally urges the ratchet wheel **18** in the webbing protracting direction (direction of arrow X2 in FIG. **8**) and the arm **26***c* of the lock arm **26** which presses the sensor spring **25** explained later, from interfering with the reel **3**.

To the rocking end of the pole **16**, formed integrally are gear teeth **16***c* capable of engaging with and in correspondence to the inner gear teeth **2** structured on the side plate **1***a*. A shaft hole **16***a* to which the spindle **7** loosely engages is provided at the central portion of the pole **16**. Provided to the sensor side face of the pole **16** are an engagement protrusion **16***b* positioned at the rocking end side and a pressure protrusion **16***d* positioned at the pole rear end portion **16***e*.

That is to say, as the spindle **7** is loosely engaged with the shaft hole **16***a,* the spindle **7** supports the pole **16** in a rockingly rotatable manner and enables a prescribed relative displacement. The tip of the spindle **7** passing through the shaft hole **16***a* of the pole is caulked to a stopper hole **17***b* of the retaining plate **17**, which is engaged with a spindle pin **6** pressed into the reel **3** by such pin passing through the perforation hole **17***a*. Thus, the retaining plate **17** prevents the pole **16** from rising from the end face of the reel **3**.

The end of the engagement protrusion **16***b* of the pole **16** is inserted into a cam hole **18***a* formed on the ratchet wheel **18**, which is arranged on the exterior of the retaining plate **17** and rotatably supported by spindle pin **6**. Thus, when the ratchet wheel **18** relatively rotates toward the webbing retracting direction (direction of arrow X1 in FIG. **8**) in relation to the reel **3**, the cam hole **18***a* works to move the tip of the engagement protrusion **16***b* outward toward the radius direction from the rotational central axis of the reel **3**. Thereby, the pole **16** rockingly rotates around the spindle **7** in the engagement direction (direction of arrow Yl in FIG. **7**) with the inner gear teeth **2** structured on the side plate **1***a*.

In other words, by the pole **16** rockingly rotating toward the engagement direction with the inner gear teeth **2** and the engagement teeth **16***c* of the pole **16** engaging with the inner gear teeth **2**, structured is the locking element for preventing the rotation of the reel **3** in the protracting direction of the webbing. The ratchet wheel **18** is a ratchet with its central hole rotatably supported by the spindle pin **6**, and ratchet teeth **18***b* for engaging with the sensor arm **53** of the vehicle acceleration sensor **51** are formed on the outer periphery thereof. The flange **6***a* of the spindle pin **6** supports the central hole **30***a* of the inertia plate **30**, which is a discoid inertial member for structuring the webbing acceleration sensor, which is an inertia sensor for sensing the acceleration of the protraction of the webbing **302**. The stopper pawl **23** protrusively provided toward the exterior of the retractor at the peripheral edge of the central hole of the ratchet wheel **18** determines the position of the thrust direction of the inertia plate **30** by engaging with the engagement hole **30***b*. An engagement protrusion **31** of the inertia plate **30** is engaged with the long hole **24** formed in the ratchet wheel **18**. One edge **24***a* of the long hole **24** determines the position of the rotating direction of the inertia plate **30** upon the inactivation of the emergency locking mechanism (refer to FIG. **10**).

As shown in FIG. **10**, a shaft **22** for rotatably supporting the lock arm **26** and a spring hook **55** are protrusively provided on the exterior face of the ratchet wheel **18**. And as shown in FIG. **12**, an opening **56** for inserting the spring hook **55** is provided to the inertia plate **30**. This opening **56** is formed in a shape of a long hole such that the inertia plate **30** is able to relatively rotate in relation to the ratchet wheel **18** while the spring hook **55** is inserted therein. On the other end thereof, provided is a spring hook **57** in correspondence with the spring hook **55**.

A compression coil spring **58** is engaged and inserted between this pair of spring hooks **55**, **57**. As shown in FIG. **13**, this compression coil spring **58** is urged such that the engagement protrusion **31** on the inertia plate **30** maintains contact (i.e., unlocked state) with the other end **24***b* of the long hole **24** formed in the ratchet wheel **18**.

A spring hook **21** for hooking one end of the extension coil spring **36**, wherein the other end thereof is hooked to the hook **17***c* of the retaining plate **17**, is provided to the inner face of the ratchet wheel **18**. The extension coil spring **36** rotationally urges the ratchet wheel **18** in the webbing protracting direction (direction of arrow X2) in relation to the reel **3**. As shown in FIG. **11**, the lock arm **26** is provided with an engagement pawl **26***b* for engaging with the inner

gear teeth **34***a* of the gear case **34**, and an arm **26***c* for pressing the longitudinal central portion of the linear sensor spring **25**, wherein both ends thereof are supported by a pair of hooks **18***d* provided on the exterior face of the ratchet wheel **18**.

The lock arm **26** thereby structures a stopper member for preventing the rotation of the ratchet wheel **18** in the webbing protracting direction by the engagement pawl **26***b* engaging with the inner gear teeth **34***a,* which are engaging members. The engagement pawl **26***b* is pressure urged toward the contact portion **32** of the inertia plate **30** due to the urging force of the sensor spring **25**. Incidentally, an opening is formed in the ratchet wheel **18** corresponding to the rocking range of the arm **26***c,* and the arm **26***c* passes through such opening. This is in order to guarantee the state of engagement of the arm **26***c* with the sensor spring **25**.

The contact portion **32** is structured as a cam face to which the engagement pawl **26***b* of the lock arm **26** slidably contacts, comprising a first cam face **32***a* wherein the inertia plate **30** does not influence the lock arm **26**, and a second cam face **32***b* which reciprocates the lock arm **26** such that the engaging pawl **26***b* engages with the inner gear teeth **34***a* in accordance with the rotation delay of the inertia plate **30** in relation to the reel **3**.

In the unlocked state of the emergency locking mechanism, the first cam face **32***a* is in contact with the back portion **26***d* of the lock arm **26** and, until the rotation delay of the inertia plate **30** in relation to the reel **3** exceeds a prescribed value, the back portion **26***d* will not come in contact with the second cam face **32***b*. The length of the first cam face **32***a* (i.e., rotation quantity of the inertia plate **30** in a state where the back portion **26***d* is slidably in contact with the first cam face **32***a*) is set. such that, even if the rotation delay of the inertia plate **30** in relation to the reel **3** occurs due to the inertial force working on the inertia plate **30** when the webbing **302** is completely retracted, the back portion **26***d* of the lock arm **26** will not reach the second cam face **32***b* with such level of rotation delay.

Regarding the lock arm **26** of the first embodiment, a contact pawl **26***e* is formed on the rocking end on the side opposite to the engagement pawl **26***b*. In correspondence with this contact pawl **26***e,* a step **33** capable of coming in contact with the contact pawl **26***e* is provided to the inertia plate **30**. The step **33** restricts the movement in the locking direction of the lock arm **26** by coming in contact with the contact pawl **26***e* when the inertia plate **30** is in an unlocked state and in its initial position. As shown in FIGS. **14** and **15**, when a rotation delay exceeding a prescribed value occurs to the inertia plate **30** and the back portion **26***d* of the lock arm **26** comes in contact with the second cam face **32***b,* the lock arm **26** is able to reciprocate in the locking direction due to the pressure effect of the second cam face **32***b*.

A rocking lever **20**, which is supported by the shaft hole **20***a,* is rockingly provided to the spindle **19** protrusively formed on the inner face of the ratchet wheel **18**. The rocking lever **20** is assembled between the reel **3** and the ratchet wheel **18** such that the rotation thereof in the counterclockwise direction is adequately restricted by the stopper protrusion **8** protrusively formed on the sensor side end face of the reel **3**, and the rotation thereof in the clockwise direction is adequately restricted by the pressure protrusion **16***d* protrusively formed on the sensor side face of the pole **16** coming in contact between the spindle **19** and the stopper protrusion **8**.

Provided to the central portion of the gear case **34** arranged on the exterior of the inertia plate **30** is a shaft supporter **34***b* for rotatably supporting the reel **3** via the spindle **6**. A collar **6***a* of the spindle **6** is in contact with the bottom face of the axis supporter **34***b,* and is the face for determining the position of the axial direction of the reel **3**. Provided to the lower part of the gear case **34** is a housing **50** in a shape of a box for housing the vehicle acceleration sensor **51**, which is an inertia sensing element, for sensing the acceleration of the vehicle. A sensor cover **35** is provided on the exterior of the side plate **1***a* covering the gear case **34**.

The activation of the seatbelt device retractor according to the first embodiment is now explained.

In an ordinary state of use, as shown in FIG. **13**, the ratchet wheel **18** is urged in the webbing protracting direction (direction of arrow X2 in FIG. **13**) in relation to the reel **3** due to the urging force of the pull coil spring **36** hooked on spring hook **21** and the hook **17***c* of the plate **17**. Thus, the pole **16**, wherein the engagement protrusion **16***b* thereof engages with the cam hole **18***a,* is urged in a disengagement direction with the inner gear teeth **2**. Thus, the reel is rotatable and the webbing is protractable.

When the webbing acceleration sensor inclusive of the inertia plate **30** or the vehicle acceleration sensor **51** is activated in emergency situations such as upon a collision, the lock arm **26** or the sensor arm **53**, which are stopper elements for preventing the rotation of the locking activation element in the webbing protracting direction, prevents the rotation of the ratchet wheel **18** in the webbing protracting direction and activates the retractor locking element.

When the vehicle acceleration sensor **51** or the webbing acceleration sensor is activated and the webbing **302** is protracted from the retractor **100**A after the rotation of the ratchet wheel **18** has been prevented in the webbing protracting direction, the ratchet wheel **18** generates a rotation delay in relation to the reel **3**, and relatively rotates in the webbing retracting direction (direction of arrow X1). Thus, the cam hole **18***a* of the ratchet wheel **18** moves the engagement protrusion **16***b* of the pole **16** from the rotational central axis of the reel **3** outward toward the radius direction. The pole **16** thereby rockingly rotates around the spindle **7** in the engagement direction (direction of arrow Y1 in FIG. **7**) with the inner gear teeth **2**.

When the webbing **302** is further protracted from the retractor **100**A, the engagement teeth **16***c* of the pole **16** engage with the inner gear teeth **2**, and such engagement is completed. In this state, there is a gap between the pole rear end portion **16***e* of the pole **16** and the pressure receiving face **45** of the reel **3**, and the rotation of the rocking lever **20** is restricted to be substantially without any looseness by the stopper protrusion **8** of the reel **3** and the pressure protrusion **16***d* of the pole **16**.

Here, the shaft hole **16***a* of the pole **16** is loosely engaged with the spindle **7** of the reel **3**, and as it is further supported in relation to the reel **3** in a rockingly rotatable manner and enabling a prescribed relative displacement, when the webbing **302** is further protracted from the retractor **100**A, the pole **16** relatively rotates around the rotational central axis of the reel **3** until the pole rear end portion **16***e* comes in contact with the pressure receiving face **45**.

Although the pressure protrusion **16***d* of the pole **16** is in an immovable position relationship with respect to the side plate **1***a,* the stopper protrusion **8** of the reel **3** rotates in the webbing protracting direction (direction of arrow X2). By this movement, the rocking lever **20** is rockingly rotated in the clockwise direction shown in FIG. **8** as the rocking end is pressed by the stopper protrusion **8** with the contact point with the pressure protrusion being the rotational fulcrum. When the rocking lever **20** rockingly rotates in the clockwise direction shown in FIG. **8** with the contact point with the

pressure protrusion being the rotational fulcrum, the shaft hole **20***a* supported by the spindle **19** of the ratchet wheel rotates in the webbing retracting direction (direction of arrow X1) in relation to the rotational central axis of the reel **3**. As a result thereof, the ratchet wheel **18** rotates in reverse in the webbing retracting direction in relation to the reel **3**.

Therefore, even if the vehicle acceleration sensor **51** or webbing acceleration sensor is activated and the locking element of the retractor **100**A is in a locked state and preventing the reel **3** from rotating in the webbing protracting direction, the ratchet wheel **18**, which the rotation in the webbing protracting direction is prevented, is capable of disengaging the sensor arm **53** of the vehicle acceleration sensor **51** or the lock arm **26** of the webbing acceleration sensor from the engagement with the inner gear teeth of the gear case **34**.

When further tension works on the webbing **302** when the pole **16** is in a locked state, the portion supporting the axis supporter **34***b* of the gear case **34** and the axis **15***c* of the timing belt **15** transforms, and the reel **3** tries to move upward. This movement is prevented by the contact face **3***a* and groove **3***b* formed on the reel **3** respectively coming in contact with the inner gear teeth **2** and the engagement teeth **62** on the side plate **1***b* (c.f. FIG. **7**), and such faces receive the tension working on the webbing **302**.

When the vehicle comes to a halt and the tension working on the webbing **302** is relieved, as the engagement with the ratchet wheel **18** and the sensor arm **53** or the inner teeth gear **34***a* of the gear case **34** of the lock arm **26** is already disengaged, the ratchet wheel **18** rotates in the arrow X2 direction in relation to the reel **3** due to the urging force of the pull coil spring **36** and the cam hole **18***a* of the ratchet wheel **18** moves the engagement protrusion **16***b* of the pole **16** toward the rotational central axis side of the reel **3**. Here, the tension working on the protracting direction of the webbing **302** is relieved, and, as the reel **3** is able to rotate in the webbing retracting direction (direction of arrow X1), when the reel **3** rotates in the direction of arrow X1 until the tip of the engagement teeth **16***c* of the pole **16** does not interfere with the tip of the inner gear teeth **2**, the pole **16** rockingly rotates around the spindle **7** in the direction to disengage the engagement with the inner gear teeth **2**, and the webbing becomes freely protractable as the reel **3** is unlocked.

Next, when the DC motor **110** retracts the webbing from its protracted state and when the webbing **302** is rapidly and completely retracted in accordance with the rotational power of the timing belt **15**, as the inertia plate **30**, which is the inertial member of the webbing acceleration sensor, keeps on rotating in the retracting direction in relation to the reel **3** which suddenly stopped rotating, the inertia plate **30** continues rotating in the retracting direction in relation to the reel **3** and a rotational delay arises with regard to the reel **3** in terms of the protracting direction of the reel **3**. Nevertheless, the contact portion **32** of the inertia plate **30** for reciprocating the engagement pawl **26***b* of the lock arm **26** in the engagement direction with the inner teeth gear **34***a* of the gear case **34** is structured of two cam faces **32***a*, **32***b* for reciprocating the engagement pawl **26***b* toward the inner teeth gear **34***a* after the rotational delay in relation to the reel **3** of the inertial plate **30** has reached a prescribed value. Thus, until the rotational delay of the inertia plate **30** with regard to the reel **3** reaches a prescribed value, the engagement pawl **26***b* will not reciprocate in the engagement direction with the inner teeth gear **34**.

The present invention according to this embodiment is structured as above, and an electromagnetic actuator **112** is further provided to the activating locking mechanism as shown in the lower part of FIG. **8**. The electromagnetic actuator **112**, as shown in FIGS. **16** and **17**, is structured of a solenoid (excitation coil) **112***a*, coil spring (elastic member) **112***b*, plunger with a collar (magnetic core) **112***c*, and arranged at the lower part of the vehicle acceleration sensor **51**.

In a normal state, the solenoid **112***a* is excited. In such state, as shown in FIG. **16**, the plunger **112***c* does not contact the ball weight **54**, and does not influence the locking mechanism **102**. When the controller **200** releases the excitation of the solenoid **112***a* in order to lock the webbing (S**28**), the plunger **112***c* is raised due to the urging force of the spring **112***b*. The tip of the plunger **112***c* passes through the opening at the bottom face of the sensor cover **52** and thrusts the ball weight **54**. When the ball weight **54** is pushed up, the sensor arm **53** moves in the upper direction in FIG. **16**, and the stopper protrusion **53***a* engages with the ratchet teeth **18***b* of the ratchet wheel **18**. Thereby, the rotation of the ratchet wheel **18** in the webbing protracting direction (direction of arrow X2 in FIG. **8**) is prevented. When the webbing is protracted and the reel **3** rotates in the protracting direction, the rotational difference in the stopped ratchet wheel and the reel **3** moves the pole **16** outward toward the radius direction of the reel **3**, and engages with the inner gear teeth **2** of the frame **1***a*. The rotation in the protracting direction of the reel **3** is thus prevented.

In this example, when the locking operation is not conducted and the excitation current is cut off while supplying an excitation current to the solenoid **112***a*, the locking operation is endeavored. That is, the locking mechanism **102** is activated by low-level activation signals being supplied thereto. Therefore, even if power to the seatbelt device is cut off, the webbing **302** can be locked.

FIG. **18** shows another structural example of the electromagnetic actuator. In this example, the electromagnetic actuator **112** is structured of a solenoid **112***a*, plunger **112***c*, approximate L-shaped lever **112***d* wherein one end thereof is engaged with the plunger **112***c* and the central portion thereof is rotatably supported, and a coil spring **112***b* for applying urging force to the lever **112***d* in the clockwise direction in FIG. **18**. When the pawl of the lever **112***d* moves and comes in contact with the teeth face **18***b* of the ratchet wheel **18**, the rotation of the ratchet wheel **18** is prevented and the locking mechanism by the pole **16** and inner gear teeth **2** of the frame is activated.

In the normal state where an excitation current is being supplied from the controller **200**A to the solenoid **112***a*, the solenoid **112***a* draws the plunger **112***c* near in resistance to the coil spring **112***b*, and the pawl on one end of the lever **112***d* rotatably supported at the other end with the plunger **112***c* is separated from the ratchet wheel **18**. Therefore, the locking mechanism is not activated.

Next, when the CPU detects a malfunction (S**26**, S**32**), the supply of the excitation current from the controller **200**A is cut off in order to lock the webbing (S**28**). The plunger **112***c* is protracted in the downward direction of FIG. **18** by the urging force of the coil spring **112***b*, and the lever **112***d* rotates. Thereby, the pawl of one end of the lever **112***d* engages with the teeth **18***b* of the ratchet wheel **18** and prevents the rotation of the ratchet wheel **18** in the webbing protracting direction. When the webbing **302** is protracted and the reel **3** rotates in the protracting direction, the pole **16** moves outward toward the radius direction due to the rotational difference between the stopped ratchet wheel **18** and the reel **3**, and engages with the inner gear teeth **2** of the frame **1***a*. Thereby, the rotation of the reel **3** in the protracting direction is prevented, and the lock is completed.

According to the present invention of this embodiment, when a malfunction in the motor or retraction/protraction is detected, it is possible to reliably secure the passenger as the protraction of the webbing is prevented due to the activation of the locking mechanism. Further, it is preferable in that the locking of the webbing is secured by the mechanical locking mechanism even if the power etc. to the motor is cut off.

In the first embodiment, described was an emergency locking mechanism of the type comprising a webbing acceleration sensor as well as a vehicle acceleration sensor, but needless to say, the seatbelt device of the present invention may be a retractor comprising only the webbing acceleration sensor, or only the vehicle acceleration sensor.

According to the seatbelt device of the first embodiment, when a malfunction in the webbing retraction/protraction by the DC motor is detected, the protraction of the webbing is locked. Thus, it is possible to reduce, as much as possible, the slack in the webbing upon a vehicle accident.

(Second Embodiment)

The seat belt device of the present invention according to the second embodiment is now explained with reference to the relevant drawings. The components of the second embodiment which are the same as those in the first embodiment are given the same reference numerals, and the explanation thereof is omitted.

The difference between the seatbelt device of the second embodiment and the seatbelt device of the first embodiment is in the structure of the webbing locking mechanism **102**B of the retractor **100**B and the controller **200**B.

That is, the locking mechanism **102**B of the second embodiment comprises a compulsory unlocking mechanism **102***a*.

FIG. **24** shows an example of the compulsory unlocking mechanism **102***a*. The latch plate **71** constituting a part of the locking mechanism **102**B is mounted on the reel shaft **103***a*. Teeth are formed on the outer periphery of the latch plate **71**, and locking is secured by the tip of the pole **72**, wherein the center thereof is rotatably supported by a frame (not shown), engaging with such teeth. Normally, the locking operation is adequately controlled by the emergency locking mechanism which is activated upon detecting the webbing **302** (c.f. FIG. **1**) exceeding a prescribed protraction acceleration, the emergency locking mechanism which is activated upon detecting an acceleration working on a vehicle exceeding a prescribed value, or an automatic locking mechanism.

The compulsory unlocking mechanism **102***a* is provided with a pole actuator **73** and is activated by activation signals from the controller **200**B. When the pole actuator **73** operates, as shown in FIG. **25**, the rod is extended to compulsorily extend the pole **72**, and the pole **72** is unlocked. Thereby, the reel shaft **103***a* is freed and the protraction of the webbing is enabled.

FIGS. **26** and **27** show structural examples of the pole actuator **73**. Built in to the pole actuator **73** is a rod **73***b* provided with a ratchet (teeth) on the inside of a cylinder **73***a*, and a gas generator **73***c* is provided to the bottom face of this cylinder **73***a*. Provided to the outlet of the cylinder **73***a* is a stopper **73***d* for stopping the ratchet and preventing the rod **73***b* from returning. When activation (ignition) signals from the controller **200**B are supplied to the gas generator **73***c*, as shown in FIG. **29**, the powder ignites and expansion gas is generated, and the rod **73***b* in the cylinder **73***a* is pushed out. As shown in FIG. **25**, the rod **73***b* rotates the pole **72** and compulsorily unlocks the system.

Similar to the first embodiment, provided to the left end of the reel shaft **103***a* are a pretensioner **104**, pulley **105**, and potential meter **111**.

Supplied to the controller **200**B are the respective outputs from the seatbelt device detector **317** for detecting the engagement/disengagement of the seatbelt device, drowning detector **401** for detecting the drowning of a vehicle, rollover detector **402** for detecting the rollover of a vehicle, and collision predictor **403** for predicting the possibility of a collision between one's vehicle and an obstacle.

As the drowning sensor **401**, for example, a sensor capable of detecting the capacitance change between the electrodes due to water or seawater seeping therebetween may be used. The impedance of this sensor is measured with an impedance-measuring device and, when it is lower than a prescribed impedance value, the vehicle is determined as having drowned. This drowning detector **401** is arranged, for example, at the lower part of the vehicle interior at the center console etc.

The rollover detector **402**, for example, may be structured of a roll angle sensor and a judgment unit. The roll angle sensor, for example, may be structured by utilizing a distortion gauge acceleration sensor for detecting the acceleration in the upward and downward directions. The judgment unit judges a rollover when the roll angle exceeds a prescribed value. For example, the detection acceleration is 1G during the normal travelling of a vehicle, but when the vehicle rotates its front and back directions as the axial direction, it becomes 0.5 G at a 45-degree rotation. Therefore, it is possible to judge a rollover by the change in the gravitational value.

The collision predictor **403** measures the distance to the obstacle with the likes of an infrared laser radar, millimeter wave radar, or ultrasonic radar and calculates the time until collision by dividing such obtained distance with the time variation amount (speed) of such distance. If the time until collision is less than a prescribed value, 0.1 second for example, the collision predictor **403** judges that a collision is unavoidable, and outputs collision signals.

FIG. **20** is a block diagram explaining the outline of the structure of the controller **200**B. Similar to the first embodiment, this controller **200**B is structured of a microcomputer system. The CPU **201** loads the control program and data retained by the ROM **202** to the work area of a RAM **203**, implements various programs explained later, and controls operations such as the compulsory unlocking of the seatbelt locking mechanism, and the normal rotation, reverse rotation, and suspension of the DC motor **110**. The output voltage corresponding to the rotation quantity of the aforementioned potential meter **111** is A/D converted in a prescribed cycle by an A/D converter of the input interface **204**. The input interface **204** has a CPU built therein and writes the converted output voltage data to the rotational field of the axis **103***a* of the RAM **203** by DMA operation. The CPU also monitors the output voltage data. For example, the CPU compares the values of the previous and present output voltage data, judges the state of the reel shaft axis **103***a*, namely the state of normal rotation, reverse rotation, or suspension of rotation, and sets the corresponding flag to the flag register of the RAM **203** by DMA operation.

The CPU of the input interface **204** sets a flag representing the engagement/disengagement of the seatbelt device to a flag register of the RAM **203** upon receiving the output of the seatbelt engagement detector **317** built in the buckle of the seatbelt device and which generates an output corresponding to the engagement of the webbing.

The CPU of the input interface **204** sets a drowning flag to the flag register of the RAM **203** upon receiving signals from the drowning detector **401** representing that the vehicle has drowned.

The CPU of the input interface **204** sets a rollover flag to the flag register of the RAM **203** upon receiving signals from the rollover detector **402** showing the rollover of a vehicle.

The communication interface **216** is structured of a microcomputer system and, when the collision predictor outputs collision signals, sets a collision flag to the flag register of the RAM **203** by DMA operation.

When the prescribed conditions set to the control program explained later are fulfilled, the CPU **201** provides to the output interface **205** an unlocking order, and normal rotation order, reverse rotation order, or suspension order of the DC motor **110**. The output interface **205** supplies activation signals (ignition signals) to the gas generator **73***c* of the compulsory unlocking mechanism **102***a* in correspondence with the unlocking order. The output interface **205** further generates gate control signals G1, G2 corresponding to the normal rotation order, reverse rotation order, or drive suspension order and controls the power transistor bridge circuit of the motor drive circuit **206**. The motor drive circuit **206** supplies to the DC motor **110** normal direction drive current or reverse direction drive current, or suspends such supply.

FIGS. **21** through **23** are flowcharts explaining the operation of the CPU **201** of the controller **200**B. The CPU **201** monitors the flag register periodically or in accordance with the generation of interrupt orders. The CPU **201** judges whether a collision flag has been set to the flag register (S12). If the collision flag has been set (S12; YES), the CPU **201** orders the output interface **205** to retract the seatbelt for a predetermined time, 5 seconds for example. Thereby, the DC motor **110** rotates the reel shaft **103***a* in the webbing retracting direction, secures the passenger to his/her seat by removing the slack in the webbing, and seeks the safety of the passenger upon a collision (S14). If the collision flag has not been set (S12; NO), the CPU **201** checks other flags.

Next, the CPU **201** judges whether a drowning flag has been set to the flag register (S122). If a drowning flag has been set to the flag register (S122; YES), in order to provide a certain degree of slack to the seatbelt (30 cm for example) such that a passenger may escape even if he/she is wearing the seatbelt, the CPU **201** activates the actuator **73** by supplying activation signals to the compulsory unlocking mechanism of the seatbelt device of the retractor **100**B, compulsorily unlocks the webbing **302**, and makes the reel shaft **103***a* rotatable (S124). The CPU **201** orders the reverse rotation (seatbelt protracting direction) of the DC motor **110** to the output interface **205**. When the DC motor **110** rotates, the CPU **201** detects the rotation quantity with the output of the potential meter **111** and, when it becomes a prescribed quantity, orders the suspension of the DC motor **110** to the output interface **205** (S126). When a drowning flag has not been set to the flag register (S122; NO), the CPU **201** checks other flags.

Next, the CPU **201** judges whether a rollover flag has been set to the flag register (S132). When a rollover flag has been set to the flag register (S132; YES), as the passenger is upside down due to the rollover and there is fear that such passenger may hit his/her head on the vehicle ceiling due to the impact of the rollover, the CPU **201** does not protract the webbing until a predetermined time elapses sufficient for the collision to abate from the time the rollover is detected (S134). After the impact from the rollover has abated, the CPU **201** provides activation signals to the compulsory unlocking mechanism **102***a* and unlocks the reel shaft **103***a* by activating the actuator **73** (S136). Next, the CPU **201** rotates the DC motor **110** to the protracting side of the webbing **302**. In order to provide a certain degree of slack to the seatbelt (30 cm for example) such that a passenger may escape even if he/she is wearing the seatbelt, the CPU **201** orders the reverse rotation (seatbelt protracting direction) of the motor to the output interface **205**. When the DC motor **110** rotates, the CPU **201** detects the rotation quantity by the output of the potential meter **111** and orders the suspension of the DC motor **110** to the output interface **205** when such quantity reaches a prescribed quantity (S138). When a rollover flag has not been set to the flag register (S132; NO), the CPU **201** checks other flags.

According to the seatbelt device of the second embodiment as described above, the slack in the webbing **302** is removed prior to the vehicle collision and the webbing **302** is loosened when the vehicle has drowned, such that the passenger may easily escape. Further, when the vehicle rolls over, the seatbelt is loosened after the rolling and impact of the vehicle due to the rollover have abated, and the passenger's safety and ease of escape from danger is sought.

According to the second embodiment as mentioned above, when an accident is detected, the webbing is loosened after the impact from the accident has abated, and the passenger may easily escape from the vehicle. Moreover, the control mode of loosening the webbing **302** is determined in correspondence with the state of the accident (or the type of accident). For example, if it is a drowning accident or rollover accident, it is advantageous as the webbing is loosened in a separate, appropriate timing.

Although the second embodiment describes examples of drowning and rollover as state of vehicle accidents, it is not limited thereto and may be of other states of vehicle accidents.

As described above, the seatbelt device according to the second embodiment secures the passenger to his/her seat upon removing the slack in the seatbelt prior to the accident and, after the accident, loosens the seatbelt in an appropriate timing in correspondence with the state of the vehicle accident. Thus, it is preferable in that the passenger's safety and ease of escape are ensured.

(Third Embodiment)

The seatbelt device of the present invention according to the third embodiment is now explained with reference to the relevant drawings. The components of the third embodiment which are the same as those in the previous embodiments are given the same reference numerals, and the explanation thereof is omitted.

The difference between the seatbelt device of the third embodiment and the seatbelt devices of the previous embodiments is in the structure of the controller **200**C of the retractor **100**C.

Similar to the previous embodiments, the DC motor **110** of the retractor **100**C in the third embodiment is connected to the controller **200**C. The motor drive circuit **206** controls the rotation of the DC motor **110** in accordance with the control signals from the controller **200**C.

As shown in FIG. **28**, the controller **200**C comprises a timer **417** for measuring time and a non-volatile memory **421**, and is connected to the buckle connection detector **416** for detecting whether the tongue plate of the seatbelt device is engaged with the buckle and for detecting whether the tongue plate of the seatbelt device has been disengaged from the buckle, and to the controller (MPU) **415** provided to the travelling state detector **420** for detecting the travelling state of the passenger driven vehicle.

The controller **415** is connected respectively to the distance sensor **412** for measuring the distance between a vehicle and the object in front of such vehicle, and a steering angle sensor **413** for detecting the steering angle of the steering wheel.

FIG. **29** is a circuit diagram of the motor drive circuit **206**. Terminals P**1** and P**2** shown in FIG. **29** are input terminals of PWM (Pulse Width Modulation) signals output from the controller **200**C and, for example, 20 kHz PWM signals are input thereto. Terminals P**3** and P**4** are output terminals for the current detector, and terminals P**5** and P**6** are output terminals for the voltage detector. Terminals P**1** through P**6** are respectively connected to the controller **200**C. Voltage Vb shown in FIG. **29** is supplied to the DC motor **110**. The plurality of transistors and FETs etc. shown in FIG. **29** are for driving the DC motor **110** in a normal rotation or reverse rotation by PWM signals from the controller **200**C.

Circuit C**1** shown in FIG. **29** is a current detection circuit for detecting the current i flowing to the DC motor from the current flowing to the resistance r**1**, and comprises interface (IF) circuits IF**1** and IF**2** for removing the fluctuation of the current due to the influence of PWM signals. The controller **200**C receives voltage signals respectively from IF**1** and IF**2**, and detects the current i flowing to the DC motor **110** based on such voltage signals.

Circuit C**2** is a voltage measurement circuit for measuring the voltage between terminals applied to the DC motor **110** and comprises IF**3** and IF**4** for removing the fluctuation between the terminals due to the influence of PWM signals. The controller **200** receives voltage signals respectively from IF**3** and IF**4** and measures the voltage between the terminals applied to the DC motor **110** based on such voltage signals.

IF**1** through IF**4** are, for example, a low-pass filter structure made from a resistance r**2**, a resistance r**3** having a resistance value smaller than the resistance r**2**, and a condenser C**3**, and sets its cutoff frequency to, for example, 20 Hz. Thereby, the influence of PWM signals output to the controller **200**C at the current detection circuit C**1** and voltage measurement circuit C**2** is reduced to −60 dB. Thus, the current to be detected by the current detection circuit C**1** and the voltage between the terminals to be measured by the voltage measurement circuit C**2** are hardly influenced.

The controller **200**C judges whether the webbing **302** has been protracted by the polarity of the voltage between the terminals of the DC motor **110**, and judges whether the retraction of the webbing **302** has been completed by the current i flowing to the DC motor **110**.

Further, when the protraction of the webbing upon the passenger fastening his/her seatbelt device is detected, the controller **200**C performs the following control operations: seatbelt fastening assistance control for controlling the motor such that the webbing **302** can be easily protracted; seatbelt oppression removal control for retracting the webbing **302** after the tongue plate of the webbing is engaged with the buckle and controlling the motor in order to provide a prescribed slack to the passenger after the webbing **302** is fitted to the passenger's body and reaches a retraction limit; movement control for controlling the DC motor **110** in order to ease the protraction of the webbing **302** when the passenger tries to protract the webbing **302** such that he/she may move after fastening such webbing; and housing control for controlling the DC motor **110** in order to house the webbing **302** when the passenger does not fasten the webbing **302** or when the tongue plate is disengaged from the buckle.

The flow of the control signals of the respective constituent parts structuring the seatbelt device of the third embodiment is now explained.

The distance sensor **412** outputs to the controller **415** control signals showing the measurement results of the distance between one's vehicle and the object in front of such vehicle. The controller **415** calculates the safe vehicle interval distance from the formula (1) below and, when the safe vehicle interval distance ds is larger than the value output from the distance sensor **412**, outputs to the controller **200**C control signals showing a collision danger warning.

After storing to the non-volatile memory **421** the number of times the control signals show this collision danger warning (i.e., frequency of control signals), the controller **200**C performs the collision danger warning control for alternately protracting and retracting the webbing **302** in a repetitive manner. Thereby, the passenger will recognize that there is a danger of collision. Furthermore, the controller **415** calculates a collision unavoidable distance dd obtainable from the formula (2) below and, when this collision unavoidable distance dd is larger than the value output from the distance sensor **412**, outputs to the controller **200**C control signals showing that a collision is unavoidable. At such time, the controller **200**C performs collision unavoidable control for changing the retraction power of the webbing **302** in accordance with the value output from the distance sensor **412** and retracting the seatbelt thereafter. The passenger is thereby appropriately protected upon a collision.

$$ds = Vr \times (td + \beta) \quad (1)$$

$$dd = Vr \times td \quad (2)$$

ds: safe vehicle interval distance (unit: m)
dd: collision unavoidable distance (unit: m)
Vr: relative speed (unit: m/s)
td: response delay of driver (e.g., 0.5 to 2 seconds)
β: value determined by braking characteristic of vehicle (e.g., 0.5 to 2 seconds)

The steering angle sensor **413** outputs to the controller **415** control signals corresponding to the steering angle of the steering wheel. When the maximum value of the variation amount of the steering angle within a predetermined time (2 seconds for example) is within a prescribed value (8 degrees for example), the controller **415** judges that there is an indication of the driver driving asleep and outputs to the controller **415** control signals showing a warning thereof. After storing the frequency of sent control signals showing this sleep-driving warning to the non-volatile memory **412**, the controller **415** performs sleep driving prevention control for alternately protracting and retracting the seatbelt in a repetitive manner. The driver may thereby recognize that he/she was driving asleep.

The buckle connection detector **416** detects whether the tongue plate of the seatbelt device is engaged with the buckle, and outputs corresponding control signals to the controller **200**C. The motor drive circuit **206** controls the rotation of the DC motor **110** based on the control signals from the controller **200**C.

FIG. **30** is a diagram showing an example of control programs executed by the controller **200**C. Included in the control programs executed by the controller **200**C are: program **430** for setting the alarm threshold, program **431** for detecting the protraction speed, program **432** for detecting the time until seatbelt engagement, program **433** for detecting the frequency of protraction during seatbelt engagement, program **434** for detecting the danger encountering frequency, program **435** for detecting the continuation time of seatbelt engagement, and program **436** for detecting the seatbelt engagement frequency.

The program **430** for setting the alarm threshold is a program for setting the alarm threshold regarding whether to give a warning with the vibration of the seatbelt device which alternately protracts and retracts the webbing **302** in

a repetitive manner. It is easier to send the warning with the vibration of the seatbelt device by lowering the alarm threshold, and it will be more difficult to send the warning with the vibration of the seatbelt device by raising the alarm threshold. For example, when a passenger is wearing the seatbelt for a prolonged period of time, the alarm threshold is lowered in order to send, with ease, the warning with the vibration of the seatbelt device as the driver's attentiveness lowers due to fatigue from driving for many hours.

The program **431** for detecting the protraction speed is a program for detecting the protraction speed of the webbing **302** when the passenger fastens the seatbelt device from an unfastened state. Particularly, this program detects the protraction speed of the webbing **302** based on the level of the voltage between the terminals of the DC motor **110**.

The program **432** for detecting the time until seatbelt engagement is a program for detecting the time from the moment the protraction stops upon the webbing **302** being protracted when the passenger fastens the seatbelt device from an unfastened state until the time the seatbelt device is fastened. Particularly, the protraction stoppage of the webbing **302** is determined by the voltage between the terminals of the DC motor **110**, and the engagement of the seatbelt device is detected by the control signals from the buckle engagement detector **416**. This program clocks with the timer **417** the time from the moment the protraction of the webbing **302** stops until the time the seatbelt device is fastened, and performs the detection thereof.

When the protraction speed detected by the program **431** for detecting the protraction speed is fast and when the time until engagement of the seatbelt device detected by the program **432** for detecting the time until seatbelt engagement is short, the controller **200**C judges that the driving ability of the passenger is high, and makes the warning difficult by raising the alarm threshold with the program **430** for setting the alarm threshold.

The program **433** for detecting the frequency of protraction during seatbelt engagement is a program for detecting the frequency of the webbing protraction by the passenger during the fastening of the seatbelt device. Specifically, a single protraction is when the webbing **302** is protracted and a stoppage thereof is detected thereafter. This frequency of webbing protraction is calculated during the continuous engagement of the seatbelt, and continued until the seatbelt device becomes an unfastened state. This program detects the continuation time during the engagement of the seatbelt device with the timer **417**, detects the protraction frequency by dividing the calculated webbing **302** protraction frequency with this detected continuation time of seatbelt engagement, and stores this frequency to the non-volatile memory **421**.

When the protraction frequency detected by the program **433** for detecting the frequency of protraction during seatbelt engagement is high, the controller **200**C judges that there is a high possibility of encountering danger, and eases the warning by lowering the alarm threshold with the program **430** for setting the alarm threshold.

The program **434** for detecting the danger encountering frequency is a program for calculating the frequency of danger encountered by the passenger while wearing the seatbelt device, and detecting the danger encountering frequency by dividing such calculated frequency with the continuation time of seatbelt engagement during the engagement of the seatbelt device. Moreover, the frequency of danger encountered by the passenger while wearing the seatbelt device is the aggregate value of the frequency of the control signals showing the collision danger warning is sent and frequency of the control signals showing the sleep-driving warning stored in the non-volatile memory **421**. The detected danger encountering frequency is stored in the non-volatile memory **421**.

When the danger encountering frequency is high, the controller **200**C lessens the amount of slack in the webbing **302** provided during the engagement of the seatbelt device than usual, or increases the tension of the webbing **302** to further secure the passenger. The controller **200**C further increases the retraction power of the webbing **302** upon encountering danger, and controls the drive of the DC motor **110** so as to increase the vibration frequency of the seatbelt device with the vibration alarm of the seatbelt device. The control of the drive of the DC motor **110** is conducted with the change in the duty ratio of PWM signals input to the motor drive circuit **206** from the controller **200**C.

The program **435** for detecting the continuation time of seatbelt engagement is a program for detecting the continuation time of seatbelt engagement during the engagement of the seatbelt device clocked by the timer **417**. In this program, if the time elapsed from the unfastened state of the seatbelt device to the fastened state of the seatbelt device is under a prescribed value, it is possible to clock the time by accumulating the previous continuation time of seatbelt engagement during the engagement of the seatbelt device.

As the passenger's attentiveness lowers due to fatigue from driving for many hours when the continuation time of seatbelt engagement during the engagement of the seatbelt device is prolonged, the controller **200**C eases the warning by lowering the alarm threshold with the program **430** for setting the alarm threshold.

The program **436** for detecting the seatbelt engagement frequency is a program for detecting the frequency of the seatbelt device being fastened from an unfastened state based on the control signals output from the buckle connection detector **416**. The frequency detected in this program is accumulated and added to the previous frequency and stored in the non-volatile memory **421**.

As the webbing **302** becomes difficult to retract due to the deterioration and the like of the webbing as the frequency stored in the non-volatile memory **421** gradually increases, the controller **200**C controls the drive of the DC motor **110** in order to increase the retraction power of the webbing **302**. The control of the drive of the DC motor **110** is conducted with the change in the duty ratio of PWM signals input to the motor drive circuit **206** from the controller **200**C.

According to the third embodiment as mentioned above, based on the results detected respectively from the program **430** for setting the alarm threshold, program **431** for detecting the protraction speed, program **432** for detecting the time until seatbelt engagement, program **433** for detecting the frequency of protraction during seatbelt engagement, program **434** for detecting the danger encountering frequency, program **435** for detecting the continuation time of seatbelt engagement, and program **436** for detecting the seatbelt engagement frequency, the slack in the webbing **302** is reduced than usual, the tension of the webbing **302** is increased, the retraction power of the webbing **302** is increased, the vibration cycle of the seatbelt device during the alarm generated by the vibration of the seatbelt device is shortened, the drive of the DC motor **110** is controlled and the alarm threshold is controlled in order to ease the alarm by lowering the threshold or making the alarm difficult by raising the threshold. Thus, it is possible to provide a comfortable seatbelt-wearing environment and to adequately secure and protect the passenger.

(Fourth Embodiment)

The seatbelt device according to the fourth embodiment of the present invention is now explained with reference to the relevant drawings.

FIG. **31** is a diagram showing the structure of the retractor of the seatbelt device according to the fourth embodiment.

The components of the fourth embodiment which are the same as those in the third embodiment are given the same reference numerals, and the explanation thereof is omitted.

The controller **200**D of the retractor of the seatbelt device according to the fourth embodiment, as shown in FIG. **31**, connects to the controller **200**C of the retractor **100**C of the third embodiment the later explained user selector **441**, alarm threshold setting unit **442**, slack setting unit **443**, vibration pattern setting unit **444**, and retraction power setting unit **445**. Therefore, as the structure of the retractor other than the user selector **441**, alarm threshold setting unit **442**, slack setting unit **443**, vibration pattern setting unit **444**, and retraction power setting unit **445** are the same as those in the third embodiment, the explanation thereof is omitted.

The user selector **441** is provided with a user selection switch, and when the passenger selects himself/herself with this user selection switch, the various prescribed values set in advance per passenger are restored in the non-volatile memory **421** as one's own setting values. Various prescribed values are, for example, the alarm threshold, webbing slack, vibration pattern of the seatbelt device during the alarm generated by the vibration of the seatbelt device, and retraction power of the webbing.

The alarm threshold setting unit **442** enables the passenger to freely set the alarm threshold; provided that the alarm threshold is set within a prescribed range.

The slack setting unit **443** enables the passenger to freely set the slack in the webbing **302** after fastening the seatbelt; provided that the slack in the webbing is set within a prescribed range.

The vibration pattern setting unit **444** enables the passenger to freely set the vibration pattern of the seatbelt device by the alarm generated by the vibration of the seatbelt device; provided that there are three selectable vibration patterns, namely, a vibration pattern in which the vibration cycle is accelerated, the vibration is intensified, or the vibration duty is increased (i.e., retraction time per cycle is prolonged).

The retraction power setting unit **445** enables the passenger to freely set the retraction power of the seatbelt; provided that the retraction power of the seatbelt is set within a prescribed range.

According to the fourth embodiment as mentioned above, with the user selector **441**, alarm threshold setting unit **442**, slack setting unit **443**, vibration pattern setting unit **444**, and retraction power setting unit **445**, it is possible to set one's optimum alarm threshold, webbing slack, vibration pattern of the seatbelt device during the alarm generated by the vibration of the seatbelt device, and retraction power of the webbing. Thus, it is possible to provide a comfortable seatbelt-wearing environment and to appropriately secure and protect the passenger.

What is claimed is:

1. A seatbelt device comprising:

a retractor using a motor for retracting and protracting a webbing that secures a passenger to a seat; and

a controller for rotating the motor in order to at least retract the webbing and for generating an alarm;

wherein the controller executes a control program for setting a threshold value of alarm generation, and executes either a protracting speed program for determining a protraction speed of the webbing when the passenger tries to fasten the seatbelt device, or a fastening time program for determining a time required to fasten the seatbelt device after a protraction of the webbing has stopped;

wherein the controller controls an ease of alarm generation by altering the threshold value on a basis of at least either the speed determined by the protracting speed program or the time determined by the fastening time program.

2. The seatbelt device according to claim **1**, wherein the controller generates the alarm by rotating the motor to alternately and repeatedly protract and retract the webbing.

3. The seatbelt device according to claim **1**, having a buckle connection detector for detecting a state of connection between a buckle and a tongue, thereby detecting whether the webbing is fastened or not.

4. A seatbelt device comprising:

a retractor using a motor for retracting and protracting a webbing that secures a passenger to a seat; and

a controller for rotating the motor in order to at least retract the webbing and for generating an alarm;

wherein the controller executes a control program for setting a threshold value of alarm generation, and executes a protraction frequency program for determining a webbing protraction frequency while the seatbelt device is fastened;

wherein the controller controls an ease of alarm generation by altering the threshold value on a basis of the protraction frequency determined by the frequency program.

5. The seatbelt device according to claim **4**, wherein the controller generates the alarm by rotating the motor to alternately and repeatedly protract and retract the webbing.

6. The seatbelt device according to claim **4**, having a buckle connection detector for detecting a state of connection between a buckle and a tongue, wherein the protraction frequency is a value obtained by dividing a number of times of webbing protraction by a fastened-state duration after a buckle connection is detected by the buckle connection detector.

7. A seatbelt device comprising:

a retractor using a motor for retracting and protracting a webbing that secures a passenger to a seat;

a first controller for rotating the motor in order to at least retract the webbing; and

a second controller for either generating a collision danger alarm when a distance between a vehicle of the passenger and an object ahead becomes less than a specified value or a dozing alarm by determining an indication of dozing by the passenger of the vehicle;

wherein the first controller alters an amount of slack of the webbing while the webbing is fastened, on a basis of a number of alarm generation times with regard to at least either the collision danger alarm or the dozing alarm.

8. A seatbelt device comprising:

a retractor using a motor for retracting and protracting a webbing that secures a passenger to a seat;

a first controller for rotating the motor in order to at least retract the webbing; and

a second controller for either generating a collision danger alarm when a distance between a vehicle of the passenger and an object ahead becomes less than a specified value or a dozing alarm by determining an indication of dozing by the passenger of the vehicle;

wherein the first controller alters a tension of the webbing while the webbing is fastened, on a basis of a number of times of alarm generation with regard to at least either the collision danger alarm or the dozing alarm.

9. A seatbelt device comprising:

a retractor using a motor for retracting and protracting a webbing that secures a passenger to a seat;

a first controller for rotating the motor in order to at least retract the webbing; and

a second controller for either generating a collision danger alarm when a distance between a vehicle of the passenger and an object ahead becomes less than a specified value or a dozing alarm by determining an indication of dozing by the passenger of the vehicle;

wherein the first controller alters a retraction power of the webbing while the webbing is fastened, on a basis of a number of alarm generation times with regard to at least either the collision danger alarm or the dozing alarm.

10. A seatbelt device comprising:

a retractor using a motor for retracting and protracting a webbing that secures a passenger to a seat;

a first controller for rotating the motor in order to at least retract the webbing; and

a second controller for either generating a collision danger alarm when a distance between a vehicle of the passenger and an object ahead becomes less than a specified value or a dozing alarm by determining an indication of dozing by the passenger of the vehicle;

wherein the first controller generates an alarm by rotating the motor to alternately and repeatedly protract and retract the webbing;

and wherein the first controller alters a vibration cycle of the alarm on a basis of a number of times of alarm generation with regard to at least either the collision danger alarm or the dozing alarm.

11. A seatbelt device comprising:

a retractor using a motor for retracting and protracting a webbing that secures a passenger to a seat; and

a controller for rotating the motor in order to at least retract the webbing and for generating an alarm;

wherein the controller executes a control program for setting a threshold value of alarm generation, and executes a seatbelt-fastened-state duration program;

wherein the controller controls an ease of alarm generation by altering the threshold value on a basis of a seatbelt-fastened-state duration determined by the seatbelt-fastened-state duration program.

12. The seatbelt device according to claim **11**, wherein the seatbelt-fastened-state duration program receives a control signal from a buckle connection detector for determining a state of connection between a buckle and a tongue.

13. A seatbelt device comprising:

a retractor using a motor for retracting and protracting a webbing that secures a passenger to a seat; and

a controller for rotating the motor in order to at least retract the webbing,

wherein the controller executes a program for determining a number of times that the seatbelt device in an unfastened state turns into a fastened state; and

wherein the controller alters a retraction power of the webbing on a basis of the number of times a change of state is determined by the program.

14. The seatbelt device according to claim **13**, wherein the program for determining the number of times that the seatbelt device in the unfastened state turns into the fastened state, receives a control signal from a buckle connection detector for determining a state of connection between a buckle and a tongue.

* * * * *