April 30, 1935. M. A. HIRSCHL 1,999,930

DEFROSTING

Filed June 27, 1929

Fig. 1.

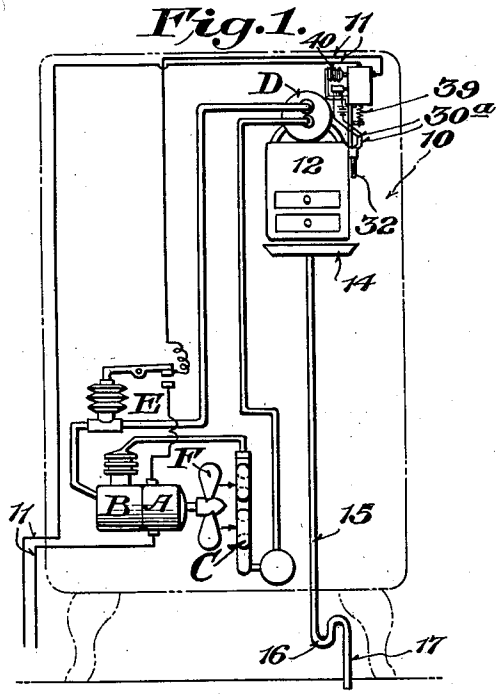

Fig. 3.

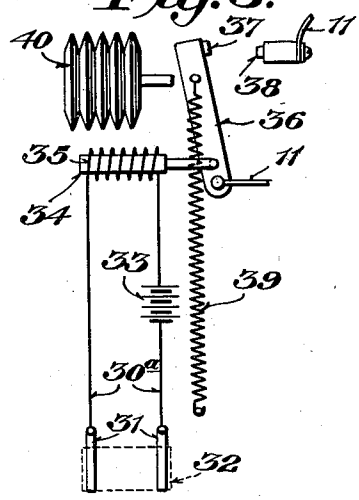

Fig. 5.

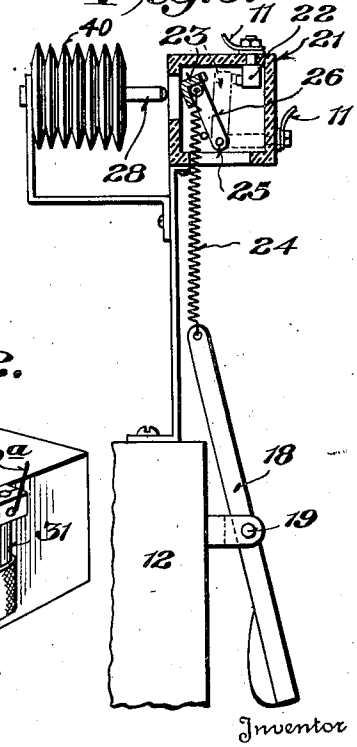

Fig. 4.

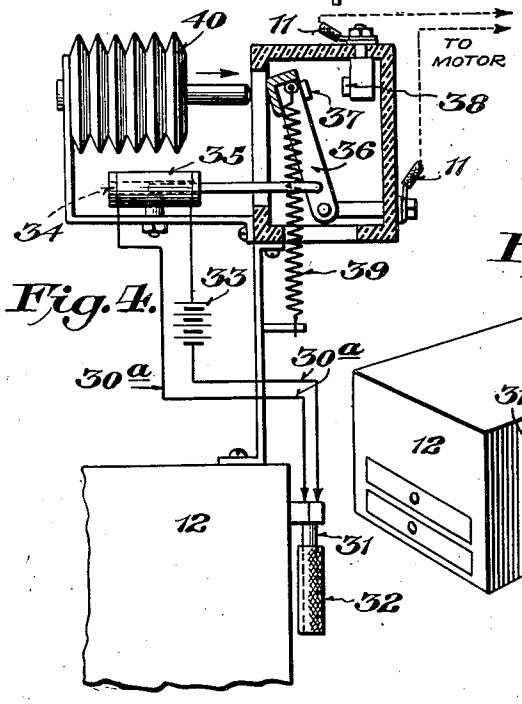

Fig. 2.

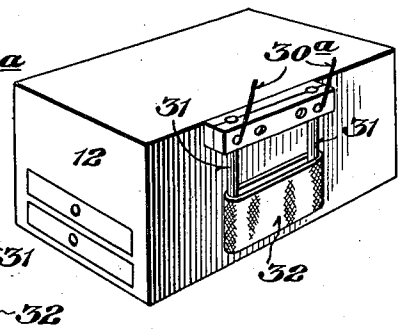

Inventor

Marcus A. Hirschl,

By Dyrenforth, Lee, Chritton & Wiles

Attorneys

Patented Apr. 30, 1935

1,999,930

UNITED STATES PATENT OFFICE

1,999,930

DEFROSTING

Marcus A. Hirschl, Chicago, Ill.

Application June 27, 1929, Serial No. 374,134

14 Claims. (Cl. 62—4)

This invention relates to improvements in defrosting mechanism and more especially, such mechanism adapted for use in connection with power refrigerating apparatus. For example, the invention is adapted for use in connection with refrigerating apparatus operated by electrical power or such equivalent apparatus as will maintain the chilling unit or evaporator within predetermined temperature limits.

Power refrigerating apparatus, regardless of the kind of power used, is ordinarily provided with a chilling unit which may be a coil, tank, or any other body which is cooled and thus serves to cool the air in the cooling compartment of the refrigerating apparatus.

In apparatus of this kind, the chilling unit in cooling the surrounding air usually causes condensation of water on said unit, which condensation freezes. There is accordingly built up on the chilling unit a coating of ice which keeps getting thicker until it interferes with the proper operation of the apparatus. Heretofore, when this occurred, it has been the custom to shut off the power, permitting the apparatus to warm up until the coating of ice melts off of the chilling unit. This is commonly referred to as defrosting.

One of the features of my invention is the provision of mechanism for automatically defrosting the chilling unit whenever the coating of ice reaches a predetermined thickness.

I have also provided means for automatically turning on the power after the defrosting is completed.

In that form of device embodying the features of my invention shown in the accompanying drawing—

Figure 1 is a diagrammatic view of a refrigerating apparatus embodying the present invention.

Figure 2 is a perspective view of a chilling unit showing a form of control member thereon.

Figure 3 is a diagrammatic view illustrating a form of switch adapted to be used in connection with the control member of Figure 2.

Figure 4 is an enlarged detail view of the structure shown in Figures 2 and 3 mounted on the cooling unit as shown in Figure 1.

Figure 5 is a detail view, partly in section, illustrating another form of the invention.

Since my invention may be embodied in a variety of forms, it seems best to state at the outset the general features thereof. Broadly speaking, it may be stated that I make use of the formation of the ice on the chilling unit to shut off the power. When the power is shut off, the ice melts. After the last of the ice is gone, there will be a rather rapid rise of temperature in the refrigerating compartment and I make use of this, operating through a suitable temperature-controlled member responsive to temperature changes manifested at the evaporator or chilling unit, to again turn on the power. In this manner, the defrosting is effected automatically whenever the ice in the chilling unit reaches a pre-determined thickness. After the ice has all melted off and the defrosting is completed, the power is automatically turned on again.

There are several ways in which ice may be utilized to shut off the power. Broadly speaking, my invention contemplates the use of an actuator member adjacent the chilling unit, said member having a part adapted to be engaged by the coating of ice forming on the chilling unit when said coating reaches a pre-determined thickness. There is also a connection between the actuator member and a control member or means for controlling the power for the refrigerating apparatus, for shutting off said power.

Merely by way of example, and in order to show some particular apparatus embodying my invention, I have shown certain apparatus in the accompanying drawing. I shall describe such apparatus now more in detail.

As shown in Fig. 1, 10 may indicate an automatic refrigerator, here shown as the type operated by electricity, current therefor being supplied through the wires 11, 11. 12 indicates the chilling unit in the refrigerator. This is here shown as being box-shaped and is of a type now in common use in small domestic refrigerators. The mechanism inside of the box need not be shown as this is well known in the art. It will suffice to say that the box 10 contains some suitable mechanism by which current supplied through the wires 11, 11 will keep the chilling unit 12 cold so that the air in the refrigerator 10 is kept cold. I am referring to apparatus of this kind, in which the chilling unit 12 is cold enough to freeze condensation of water on it so that there is built up on it an ice coating.

A particular object of my invention is the provision of means for shutting off the power so that the apparatus will warm up and permit the ice coating to melt off of the chilling unit 12, thus defrosting the same. I preferably provide, under the chilling unit 12, a drip pan 14 to receive the water from the ice which melts off the chilling unit. This water may escape from the pan 14 through the drain pipe 15 and I preferably provide thereon a suitable trap 16 to make a liquid

seal in the pipe. The end of the drain pipe 15, as indicated at 17, may lead to a sewer.

As will be observed from Fig. 1, a refrigerating system is diagrammatically illustrated, the said system operating to maintain the cooling or chilling unit 12 within predetermined lower and upper temperature limits. The motor and the compressor which constitute the means for circulating the refrigerant through the cooling unit are respectively designated as A and B and the condenser forming part of the pressure system is designated as C, while the expansion tank on the chilling unit is identified as D. The compressor, condenser and expansion tank are connected by suitable piping in the usual manner and the low pressure pipe leading to the compressor may be provided with means for maintaining the evaporator or cooling unit within predetermined temperature limits, the same being designated generally as E and comprising a pressure bellows responsive to varying pressures in the circulating system, and a switch responsive to movement of the pressure bellows, said switch being included in circuit with the motor A in the conventional way. The motor preferably also comprises a fan F for sending an air blast through the condenser C.

I shall now describe more in detail the mechanism for defrosting the chilling unit 12. In all forms of the invention this mechanism includes an actuator member. Such actuator, for example, may be a lever 18 pivoted at 19 as shown in Fig. 5, or may be the solenoid 34—35 shown in Fig. 4.

Any suitable means may be provided for causing movement of said actuator lever 18, or it may be moved by hand to shut off the power. For example, in the case of electric power, there may be provided a suitable electric control switch 21 through which the power line extends. This switch contains the two contacts 22 and 23, the latter being carried by the control arm or toggle lever 26 having attached thereto the spring 24 whose lower end is attached to the upper end of the actuator lever 18. In normal operation, the switch 21 is closed with the contact 23 in the position indicated by the broken lines, the spring 24 holding the contacts together. When the lower end of the lever 18 is moved away from the chilling unit, the upper end thereof will swing inwardly until the spring 24 moves past the pivot point 25 of the lever 26 which carries the contact 23, whereupon the spring 24 will cause the control lever 26 to snap over into the position indicated by the solid lines in Fig. 5 to break the contact. This will shut off the power to the refrigerating apparatus and, consequently, the ice on the chilling unit will commence to melt.

I may also provide means for automatically closing the switch 21 after the defrosting has been completed, that is, after the ice on the cooling unit has melted. Such means, for example, may include a temperature responsive element such as a diaphgram or sylphon 40 with a projection 28 adapted to contact with the upper end of the switch lever 26 and close the same when the temperature rises to a certain point. As long as there is any melting ice, the temperature in the apparatus will remain relatively low. As soon as the last of the ice is gone, there will be a relatively rapid rise in temperature and the diaphragm 27 can be so adjusted that shortly after this rapid rise commences, the same will expand, moving the projection 28 to the right, (Fig. 5) to engage the upper end of the lever 26 and close the switch, thus again turning on the power for the refrigerating apparatus.

Figure 5 is a diagrammatic view of the wiring from which it will be seen that the power lines 11 lead through the switch 36 on their way to the compressor and other refrigerating mechanism in the box. The details of this well known mechanism need not be shown, but is indicated in general, in the box 10 by the numeral 29.

A control member may be provided that does not move. In such cases, I contemplate that the mere contact of the ice with the control member will shut off the power. I have shown a form of such control member in Figs. 1, 2, 3 and 4. In Figs. 1, 2, 3 and 4, I have shown a form of device in which there are provided two stationary contacts 31, 31 connected by a normally dry piece of cloth or fabric 32 impregnated with salt. This member is arranged adjacent the chilling unit 12, as shown. As the ice coating becomes thicker, it finally engages the cloth 32. The salt in the cloth will cause a slight melting of the ice so that the fabric 32 will become wet with a salty solution. This will make electrical contact between the members 31, 31.

Any convenient means may be provided for shutting off the power when contact is made between the members 31, 31. For example, as shown diagrammatically in Fig. 4, the members 31 may be electrically connected to the wires 30a, said wires being the terminals of a circuit including a source of power 33 and an actuator in the form of a solenoid core 34 surrounded by a coil 35 connected to a lever 36 which carries one contact 37 in the power line 11, 11. The other contact is indicated by 38. When electrical connection is made between the terminals 31, 31, as explained above, current will flow through the solenoid coil 35 to move the armature 34 to open the switch contacts 37 and 38, thus shutting off the power through the power lines 11. The switch lever 36 is likewise provided with a toggle spring 39 so that when the solenoid armature 34 pulls it, it will snap open. In this form of device, there may be also provided a diaphragm or sylphon 40, as shown, designed to close the switch again after the defrosting has been completed.

Although I have shown the switches in the main power lines, it is to be understood that suitable relays and the like may be provided, if desired. It is to be understood also that electrical contact between the fingers of control members, as shown in Figs. 2 and 3, may be utilized to shut off any kind of power operating the refrigerating apparatus. For convenience I have here shown means for shutting off electrical power. It is perfectly obvious, however, that movement of the control member 18 could be utilized to shut off gas or other fuel, or stop mechanical movement. Likewise, electrical communication between the fingers 31, 31 operating the solenoid armature 34 could be utilized to shut off any kind of power besides electricity.

From the foregoing it will be apparent that the present invention contemplates defrosting means for a refrigerating system wherein the cooling unit is operated to be maintained within desired temperature limits, and that the defrosting means includes a thermal fluid temperature responsive element for automatically closing the circuit to a switch which is included in circuit with the motor A of the refrigerating apparatus. The thermal fluid temperature responsive element is located at the cooling unit thereby to be responsive to temperature changes manifested by

the cooling unit. When the circuit to the switch in either form of the invention is opened, the motor of the refrigerating apparatus will be rendered inoperative until the cooling unit warms up to the proper frost melting degree. Upon the rise of temperature in the cooling unit and consequently upon the occurrence of a warmer temperature in the cooling compartment, the thermal fluid temperature responsive element will expand and automatically re-close or re-set the switch, thereby closing the circuit to the motor of the refrigerating apparatus and returning the cooling unit to cold producing temperatures.

While I have shown and described a certain embodiment of my invention, it is to be understood that it is capable of many modifications. Changes, therefore, in the construction and arrangement may be made without departing from the spirit and scope of the invention as disclosed in the appended claims, in which it is my intention to claim all novelty inherent in my invention as broadly as possible, in view of the prior art.

What I regard as new, and desire to secure by Letters Patent, is:

1. In an electrical refrigerator having an evaporator, means for circulating a refrigerant through the evaporator including a motor, a switch in the current supply line to said motor, said switch including an insulating housing having terminals for the current supply line led thereto, means rendered electrically conductive by the formation of ice on the evaporator for throwing said switch to open position, and means effective upon a rise in temperature at the evaporator for throwing said switch to its closed position.

2. An electrical refrigerator having an evaporator, means for circulating a refrigerant through the evaporator including a motor, a switch in the current supply line to the motor, a bracket carried by the evaporator for supporting said switch, electrical means including a circuit having an element therein rendered electrically conductive by frost on the evaporator to energize the said electrical means and throw said switch to open position to permit defrosting of the evaporator, and temperature responsive means also carried by said bracket and effective upon a rise in temperature for mechanically throwing said switch to its closed position.

3. In an electrical refrigerator having an evaporator, means for circulating a refrigerant through the evaporator including a motor, and means for defrosting the evaporator including a switch in the current supply line to the motor, electromagnetic means for opening said switch, said means including a circuit closer mounted in a fixed position at the evaporator and including an element rendered electrically conductive by ice, and sylphon bellows means effective upon a rise in temperature for throwing said switch to its closed position.

4. In an electrical refrigerator, an evaporator, means for circulating a refrigerant through the evaporator including a motor, and means for defrosting the evaporator including a pivoted arm tensioned by a spring whereby it may be snapped to either side of its pivot, a switch contact carried by said arm, a fixed switch contact arranged in the path of movement of said arm and the fixed switch contact being in circuit with the motor, electrical means rendered operative by frost on the evaporator for throwing said arm to separate the fixed and movable contacts, and sylphon bellows means responsive to a rise in box temperature to move said pivoted arm to cause the switch contact carried thereby to engage with said fixed switch contact.

5. Means for causing defrosting of a chilling unit in power refrigerating apparatus comprising, in combination with a switch in the power line to the refrigerating apparatus, a control member supported adjacent the chilling unit, said control member including a pair of contacts connected by a bridging member rendered electrically conductive by moisture due to frost forming on the evaporator and a circuit including the power refrigerating apparatus, the switch, and the control member, whereby the control member will open the switch in the power line to cause defrosting.

6. In an electrical refrigerator, an evaporator, means for circulating refrigerant medium through the evaporator including a motor having a current supply line, and means for automatically rendering the evaporator capable of defrosting, said means comprising a switch in the current supply line for opening the same temporarily to render said evaporator capable of defrosting, and temperature responsive means mounted in a fixed position on the exterior of the evaporator and including a portion for reclosing the switch of said first named means to restore the circuit in the current supply line and also restart the refrigerating cycle.

7. A refrigerating system operated to maintain a cooling unit within predetermined low and high temperature limits, including a defrosting control device for temporarily modifying the high temperature limit, said device comprising a spring tensioned member for controlling the stopping and restarting of said system, a thermal bellows responsive to temperature changes adjacent the cooling unit, thereby to expand and contract solely by temperature variations as manifested at the cooling unit, actuating means to control said spring tensioned member to stop the operation of said system and to impose external spring resistance in the path of the said bellows when expanding, said bellows being responsive to temperature above the said high temperature limit of the cooling unit, thereby to expand and move against the external spring resistance and control said spring tensioned member to restart the said system.

8. A refrigerating system operated to maintain a cooling unit within predetermined low and high temperature limits whereby frost is formed on the exterior of the cooling unit, including, a device for temporarily modifying the high temperature limit to effect removal of said frost, said device comprising, means for stopping and restarting the operation of the system, actuating means for controlling said first named means to stop the operation of said system, and a thermal bellows device responsive solely to temperature conditions manifested adjacent the surface of the cooling unit and effective upon the rise of temperature of the cooling unit above said high temperature limit to control said first named means to restore said system to operation within said predetermined temperature limits, and also to reset the actuating means.

9. A refrigerating system operated to maintain a cooling unit within predetermined low and high temperature limits, including, a defrosting device for temporarily modifying said high temperature limit, said device including means for stopping and restarting the operation of said system and a thermal bellows, said bellows being

solely responsive to temperature conditions manifested adjacent the frost forming exterior of the cooling unit, whereby when the temperature at the cooling unit exceeds the said high temperature limit, said bellows will actuate said means to restart said system.

10. A refrigerating system including a cooling element normally operated within desired refrigerating temperature limits, means for modifying one of said temperature limits to effect rise in temperature of the cooling element to cause defrosting, and said means including a sylphon bellows responsive solely to temperature changes manifested adjacent the frost forming exterior of the cooling element and adapted to be rendered operable automatically, upon rise of the temperature of the cooling element above the melting point of ice to effect defrosting, to return the system to said desired refrigerating temperature limits.

11. A refrigerating system including a cooling unit, normally operated within predetermined upper and lower temperature limits, means for modifying said upper temperature limit to cause the temperature of the cooling unit to rise above the predetermined upper limit to effect defrosting of the said cooling unit, said means including a thermal bellows responsive to temperature changes manifested solely adjacent the frost forming exterior of the cooling unit whereby its contraction and expansion is controlled by variations in temperature at and adjacent the cooling unit, and means whereby said thermal bellows restores the said system to operate within the aforesaid predetermined upper and lower temperature limits.

12. A refrigerating system including a cooling unit normally operated within predetermined temperature limits, a device for temporarily modifying one of said temperature limits to temporarily obtain a higher temperature at the cooling unit, and a thermal diaphragm desponsive solely to temperature changes manifested adjacent the frost forming exterior of the cooling unit, and means automatically responsive to the operation of said diaphragm to restore the system to operation within said predetermined temperature limits.

13. A refrigerating system operated to maintain a cooling unit within predetermined low and high temperature limits, including, a defrosting device for temporarily raising said high temperature limit, said device comprising means for stopping and restarting the operation of said system and a thermal fluid-containing member located on the exterior of the cooling unit and responsive solely to temperature changes of the cooling unit respectively produced by the operation of the system to form ice and also by the cessation of operation of the system when the high temperature limit is raised to melt ice on the cooling unit, said member including a portion in operative relation to said means to restart the operation of said system when the temperature of the cooling unit attains frost melting degree.

14. In a control for refrigerators having a cooling unit operated between predetermined temperature limits, means adapted to be set to effect the modification of one of said temperature limits to produce and maintain a temperature at the cooling unit above the melting point of ice for a period of time to effect defrosting, and a thermal bellows responsive solely to temperature conditions manifested adjacent the frost forming surface of the cooling unit to reset said means and to restore the cooling unit to operation within predetermined temperature limits after defrosting.

MARCUS A. HIRSCHL.