No. 639,673.

Patented Dec. 19, 1899.

J. A. DYBLIE.

VALVE.

(Application filed Apr. 3, 1899.)

(No Model.)

2 Sheets—Sheet 1.

Fig. 2.

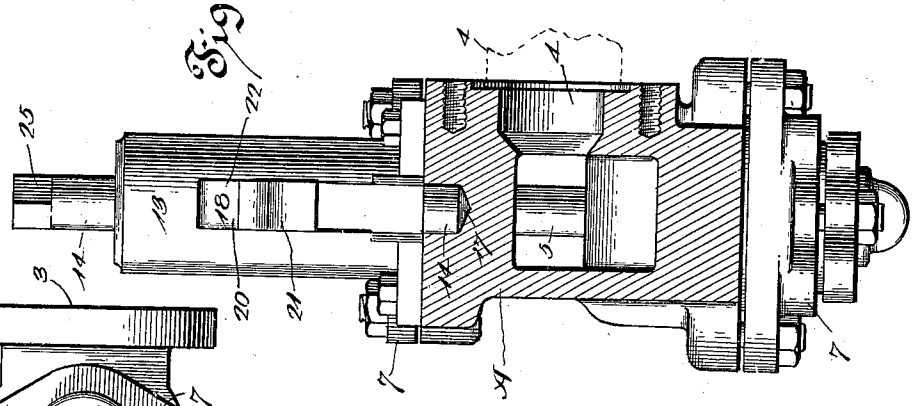

Fig. 3.

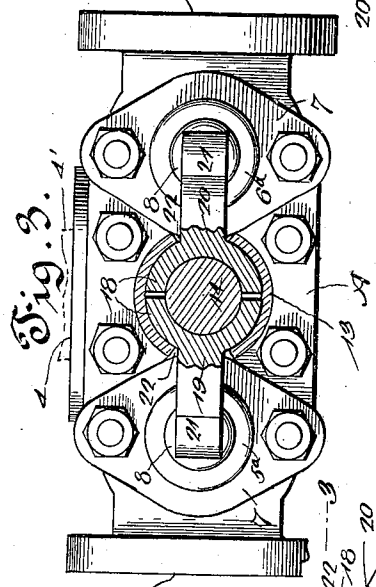

Fig. 1.

Witnesses
J. Frank Culverwell.
Heath Sutherland

J. A. Dyblie, Inventor.

By his Attorneys,

C. A. Snow & Co.

THE NORRIS PETERS CO., PHOTO-LITHO., WASHINGTON, D. C.

No. 639,673. Patented Dec. 19, 1899.

J. A. DYBLIE.

VALVE.

(Application filed Apr. 3, 1899.)

(No Model.) 2 Sheets—Sheet 2.

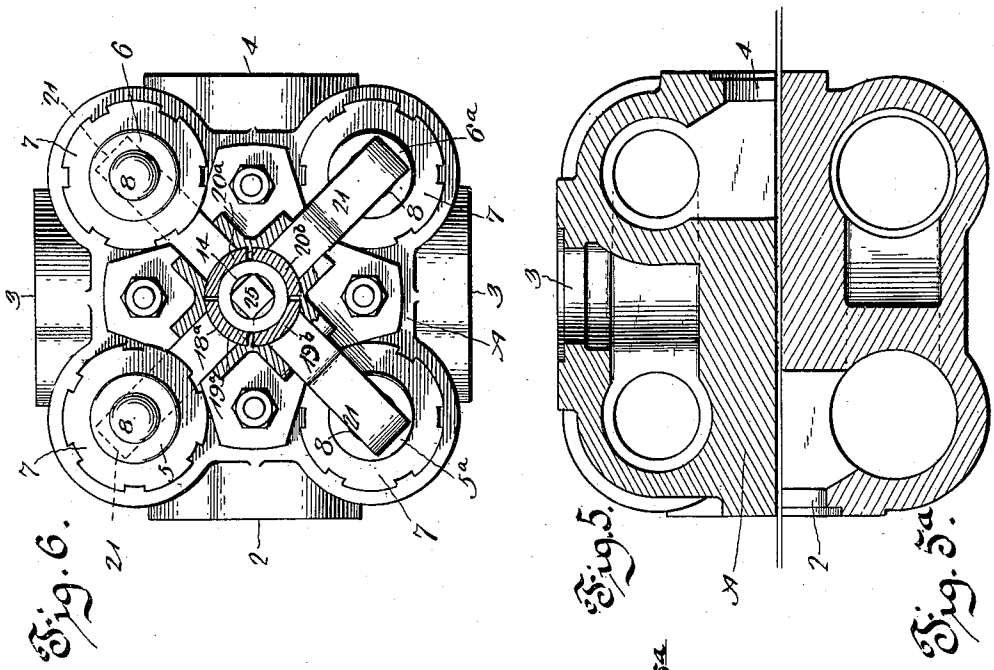

Fig. 6. Fig. 5. Fig. 5a.

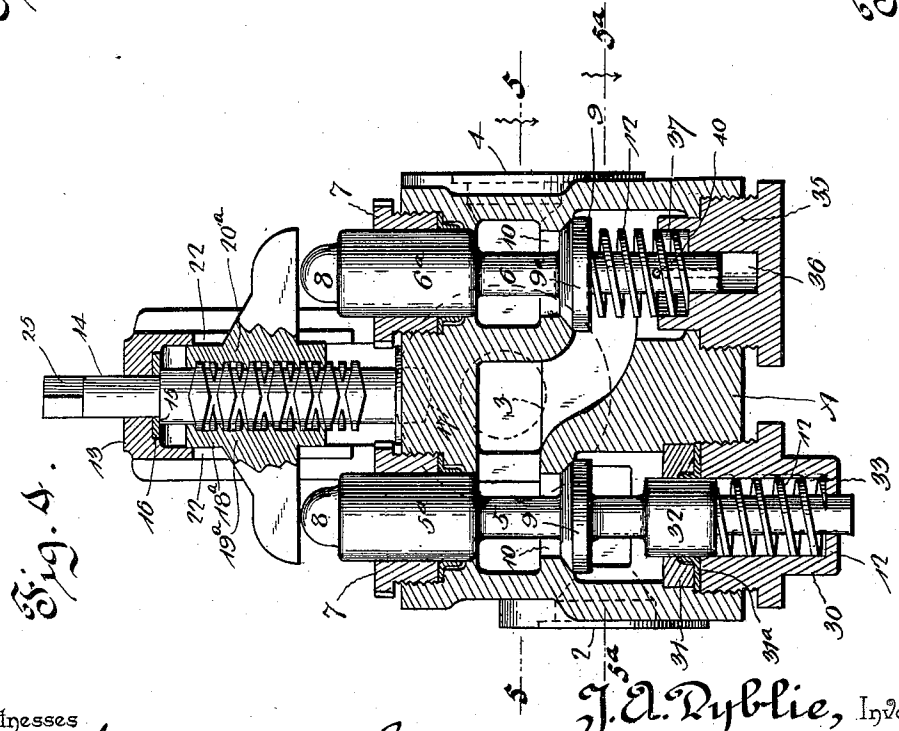

Fig. 4.

Witnesses

J. Frank Culverwell.

Heath Lutherland

By his Attorneys,

J. A. Dyblie, Inventor.

C. A. Snow & Co.

THE NORRIS PETERS CO., PHOTO-LITHO., WASHINGTON, D. C.

UNITED STATES PATENT OFFICE.

JULIUS A. DYBLIE, OF JOLIET, ILLINOIS.

VALVE.

SPECIFICATION forming part of Letters Patent No. 639,673, dated December 19, 1899.

Application filed April 3, 1899. Serial No. 711,556. (No model.)

To all whom it may concern:

Be it known that I, JULIUS A. DYBLIE, a citizen of the United States, residing at No. 418 Herkimer street, Joliet, in the county of Will and State of Illinois, have invented a new and useful Valve, of which the following is a specification.

My invention relates to valves, particularly of the hydraulic type, which are designed for use in connection with different kinds of hydraulic apparatus; and the object in view is to provide a mechanism of this class wherein the valves may be readily and gradually operated, either singly or in series, to control the supply to and exhaust from elevators, cranes, and analogous machinery, requiring application of pressure either in one direction or in two directions.

The device includes in its construction a plurality of valve members and means for alternately operating these valve members, including a compound or right and left threaded feed-screw and a similarly-threaded feed-nut, one of said parts being movable relatively to the other to provide for the successive and independent operation of the valve members. In the construction illustrated the feed-nut is movable relatively to the feed-screw, and consists of a plurality of sections, of which one has a right-hand screw-thread and the other a left-hand screw-thread for engagement, respectively, with the right and left threads of the feed-screw; and my invention contemplates the provision of such a construction and relative arrangement of parts that the mechanism may be used either in connection with a crane or other device wherein a movable part must be elevated, but is adapted to return to its normal position, upon the exhaust of the motive or liquid, by gravity, or, where motion in opposite directions must be communicated alternately to a member, by the application of pressure to the opposite surfaces thereof, such as those of a piston.

Further objects and advantages of this invention will appear in the following description, and the novel features thereof will be particularly pointed out in the appended claim.

In the drawings, Figure 1 is a longitudinal central section of a valve mechanism constructed in accordance with my invention, the same being of the two-way type. Fig. 2 is a transverse section of the same, taken upon the plane indicated by the line 2 2 of Fig. 1. Fig. 3 is a plan view, partly in section, upon the plane indicated by the line 3 3 of Fig. 1. Fig. 4 is a longitudinal central section of a modified construction of valve, wherein a plurality of inlet-valve members are employed. Fig. 5 is a half-plan section on the line 5 5 of Fig. 4. Fig. 5^a is a half-plan section on the line 5^a 5^a of Fig. 4. Fig. 6 is a top plan view of the same, partly broken away.

Similar reference characters indicate corresponding parts in all the figures of the drawings.

The apparatus embodying my invention includes a valve-casing A, which may consist of a casting or a plurality of assembled castings suitably chambered or channeled to form passages communicating at opposite ends of the casing with a supply-port 2 and an exhaust-port 3, preferably arranged in adjacent horizontal planes. These ports, with which may be connected supply and exhaust pipes 2′ and 3′, communicate by suitable passages with a chamber 4^a, having a communicating feed-port 4, designed to convey water, by the assistance of any suitable conductor 4′, to the machinery to be actuated by the liquid. Arranged between each of the said supply and exhaust ports and the chamber 4^a is a valve-seat 10, and arranged in operative relation with these seats are supply and exhaust valve members 9 and 9^a, both of which seat in the direction of flow of water through the casing or, in other words, respectively in a direction from the supply-port and toward the exhaust-port. The valve members are carried, respectively, by stems 5 and 6, which in the construction illustrated in Figs. 1 to 3, inclusive, are provided at their upper ends with preferably integral enlargements forming pistons or plungers 5^a and 6^a and at their lower ends are provided with corresponding enlargements forming pistons or plungers 5^b and 6^b. These pistons or plungers operate in guides having stuffing-boxes 7, and the inner ends or surfaces of the pistons or plungers

are exposed to the liquid-pressure in the valve-casing. The pistons or plungers at opposite ends of a valve-stem are, however, of differential areas, those which are arranged at the upper ends of the stems or toward which the valve members close being of an area greater than those at the lower ends of the stems, whereby the liquid-pressure within the casing serves to balance the valves, with a slight preponderance of pressure in a direction tending to seat the valves. In the construction illustrated the exposed areas of the plungers 5^a and 6^a are substantially equal to the areas of the ports 10, while the exposed areas of the plungers 5^b and 6^b are slightly less than those of the valve-seats; but in order to insure a positive and efficient seating of the valve members I preferably employ seating-springs 12, as shown in the drawings.

At one end of each of the valve-stems 5 and 6 is arranged a rounded projection forming a contact-head 8, and in operative relation with each of these heads is arranged a valve operating or unseating arm 21. These valve-operating arms are carried, respectively, by the sections 19 and 20 of a split or divided feed-nut 18, mounted in a guide 13, which in the construction illustrated rises from the main valve-casing. The guide is interiorly constructed to receive the nut-sections and is provided in its side walls with slots 22, through which the arms 21 project, and said arms, in connection with the guide-slots 22, serve to prevent rotary motion of the nut-sections, while allowing the independent axial movement thereof when actuated by a compound or right and left threaded feed-screw 14, which extends centrally through the guide. At its upper end this feed-screw is provided with a wrench or key-seat 25. At its lower end the feed-screw is mounted in a socket 17 in the upper wall of the casing, and at an intermediate point said feed-screw is provided with a shoulder 15, between which and the upper end or head of the guide 13 is interposed a bearing-washer 16.

In the normal positions of the parts both valve members 9 9^a are seated; but as the feed-nut sections are provided, respectively, with right and left screw-threads it is obvious that by turning the axially-immovable feed-screw in one direction, as to the left from its initial position, (represented in Fig. 1,) the right-hand section 20 of the split feed-nut will be lowered by the right-hand screw-thread to bring the arm 21 into contact with the head of the valve-stem 6, thus unseating the valve member 9^a to allow exhaust from the port 4 to pass through the port 10 to the port 3. On the other hand, the movement of the feed-screw in the opposite direction, or to the right from the position just described, will first cause the elevation of the feed-nut section 20 to release the valve member 9^a and allow its seating by the action of the coöperating spring 12, after which a continuation of the revolution of the feed-screw will cause the depression of the feed-nut section 19 by the action of the left-hand screw-threads to unseat the valve member 9.

Owing to the balance of pressure upon the valve members, due to the use of pistons or plungers having differential exposed areas or surfaces, the movement of a valve member from its seat may be accomplished by the exercise of comparatively little more force than is necessary to overcome the tension of the seating-spring.

In Figs. 4 to 6, inclusive, I have illustrated a modification of the device wherein the only essential difference resides in the duplication of the supply and exhaust ports and valve members and in the provision of a feed-nut, which consists of a number of sections corresponding with the number of valve members and so related that the supply-valve of one chamber and the exhaust-valve of the other chamber may be simultaneously unseated. Referring to the drawings, it will be seen that I have employed corresponding reference characters to denote those parts which are common to both forms of the valve, but that the feed-nut 18^a comprises independently-movable parts or sections 19^a, 19^b, 20^a, and 20^b, each having an operating or valve-unseating arm arranged in operative relation with one of the valve-stems, the diagonally opposite feed-nut sections 19^a and 20^b being simultaneously movable in one direction to respectively unseat the feed-valve of one chamber and the exhaust-valve of the other chamber and the diagonally opposite sections 19^b and 20^a being simultaneously movable in a common direction to unseat the feed and exhaust valves, respectively, of the other chamber. In the construction illustrated in said Figs. 4 to 6, inclusive, there is also a slight difference consisting in the omission of the lower piston or plunger of the exhaust-valve stem, the stem being fitted in a guide 36, formed in a plug or cap 35, and the stem being provided with a vent 40 to prevent compression of liquid or air in said guide and allow communication thereof to the interior of the casing, said guide 36 being closed at its outer end and the valve-seating spring 12 being arranged at its lower or outer end in a depression 37 in the inner end of the plug. Furthermore, the lower piston or plunger 32 on the inlet-valve stem instead of extending through to the outer side of the casing is arranged to operate in a stuffing-box having a gland 30, which is centrally bored to form a cavity 33 for the valve-seating spring 12, an annular disk 31 being removably fitted in the cavity of the valve-casing to coöperate with said gland in holding the packing-disk 31^a in place in operative relation with said piston or plunger 32.

It will be seen from the foregoing description that in both of the illustrated forms of my improved valve the valve members are adapted to be seated and unseated gradually, but at the same time positively, to avoid wa-

ter-hammer and other jar incident to the operation of the mechanism and that each valve member, with the exception of the exhaust-valve, (shown in Fig. 4 of the drawings,) is of balanced construction, with only sufficient difference in the areas of the opposite exposed surfaces to allow the water-pressure to exert a seating pressure upon the valve member, and that the seating-springs are employed merely to insure a prompt return of the valve members to their closed positions when relieved of the unseating pressure applied by the sections of the split or divided feed-nut. Obviously the differential between the surfaces which are exposed to liquid-pressure will be varied in manufacture to suit the pressure under which the water or other liquid is used in operation, a high pressure necessitating less differential, while with a low pressure a greater differential may be provided.

It will be understood, furthermore, that in practice various changes in the form, proportion, size, and minor details of construction within the scope of the appended claim may be resorted to without departing from the spirit or sacrificing any of the advantages of the invention.

Having described my invention, what I claim is—

In a valve mechanism, the combination with a valve-casing having inlet, exhaust and feed ports, of inlet and exhaust valve members for controlling said ports, pistons carried by the stem of each of said valves on opposite sides thereof and operating in guides in connection with the interior of the valve-casing, those pistons toward which the valves move in seating having greater exposed area than those connected with the same valve-stems on the opposite side, a frame having a cylindrical bore and supported by the casing, said frame having longitudinal slots, a compound feed-screw journaled in the frame and casing, equidistant from the valve-stems, and a cylindrical nut slidably fitted in the frame, formed in sections and adapted for opposite movement with respect to the feed-screw, each of said sections having a reduced radial arm extending through a slot of the frame and adapted for engagement with the stem of its respective valve to operate it.

In testimony that I claim the foregoing as my own I have hereto affixed my signature in the presence of two witnesses.

JULIUS A. DYBLIE.

Witnesses:
M. J. FITZ PATRICK,
G. S. E. WISNER.