June 7, 1938. W. P. CROCKETT, JR 2,119,778

ELECTRICAL SIGNAL SWITCH

Filed April 25, 1936

Fig. 9.

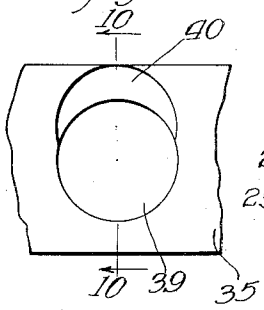

Fig. 1.

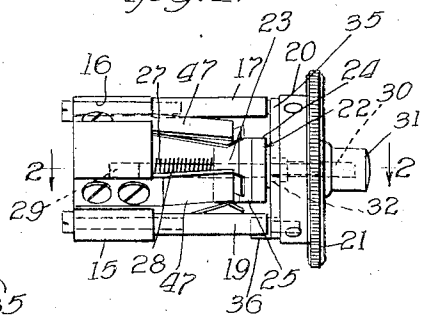

Fig. 10.

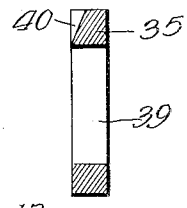

Fig. 2.

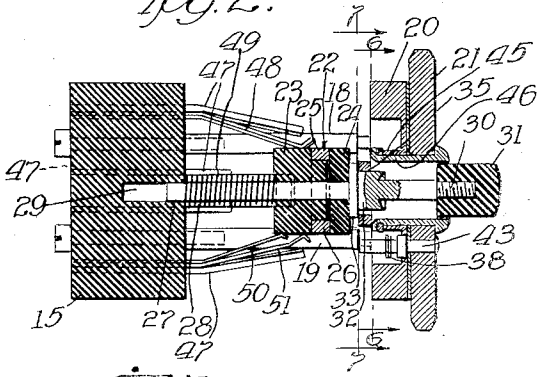

Fig. 6.

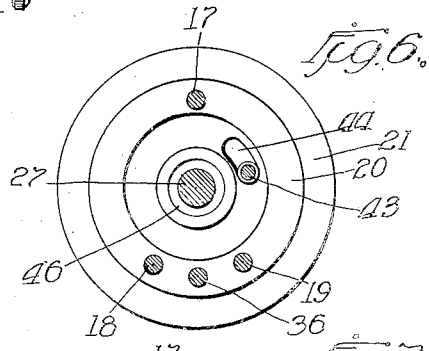

Fig. 3.

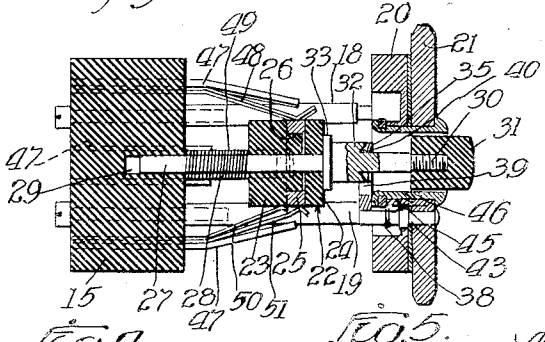

Fig. 7.

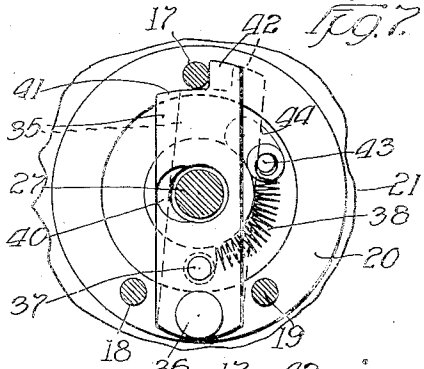

Fig. 4.

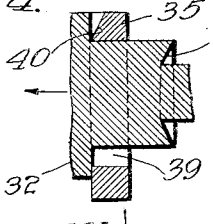

Fig. 5.

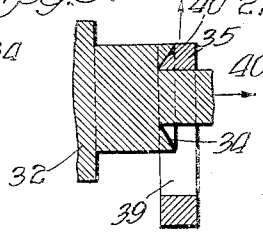

Fig. 8.

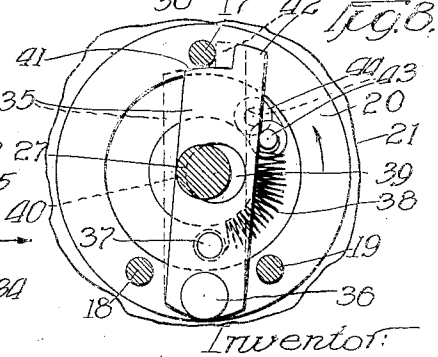

Witnesses:
Harry R. L. White
Harvey L. Hanson, Jr.

Inventor:
William P. Crockett Jr.
By Harvey L. Hanson
Attorney.

Patented June 7, 1938 2,119,778

UNITED STATES PATENT OFFICE

2,119,778

ELECTRICAL SIGNAL SWITCH

William P. Crockett, Jr., Chicago, Ill., assignor, by mesne assignments, to William P. Crockett, Chicago, Ill.

Application April 25, 1936, Serial No. 76,366

4 Claims. (Cl. 200—16)

The invention relates to an electrical signal switch, and particularly to an electrical switch which is used in hospitals, sanitariums and other places where it is desired to signal and call a doctor, nurse or other attendant for service.

The primary object of the invention is to construct the parts of the switch so that after the switch push button has been depressed by a patient, attendant or other person, causing a contact stem or plunger and a locking latch to be moved and locked, and the switch being thus in operative and locked position with electrical current flowing and illuminating a visual signal, lamp or lamps, a definite manual turning or rotating operation of the handle or cap of the switch is essential to unlock and release the contact stem or plunger and the locking latch and break the contact or contacts, and cause the lamp or lamps to be extinguished.

It is an important object of the invention that after the switch has been operated to illuminate the lamp, or lamps, even though it accidentally falls on the floor or is knocked against the wall, bed or other object, the switch cannot be put out of its set, locked or operating position since it takes a positive turning operation of the handle of the switch by the doctor, nurse or other attendant to reset the switch, restore it to its normal inoperative position, and have it ready for the next call.

It is another object of the invention to obtain a quick and rapid return of the switching mechanism to normal inoperative position by means of spring, cam and swinging latch mechanism after the lamp or lamps have been illuminated and it is dseired to cause them to be extinguished.

A further object of the invention is to assemble the parts in such a manner that after the switch push button has been depressed and the lamp or lamps have been illuminated, and while the lamp or lamps remain illuminated, the switch button may be still further depressed to operate an audible signal, bell or buzzer without the return of the push button to normal position.

The invention will be further understood by reference to the following description and the accompanying drawing in which one embodiment of the invention has been described and illustrated, but it will be understood that changes, variations and modifications may be made in the switch of the invention without departing from the spirit of the invention as set forth in the appended claims.

In the drawing:—

Figure 1 is a full size side elevational view of the electrical signal switch of the invention showing the various parts in assembled relation with the contact stem out of electrical contact;

Figure 2 is a longitudinal sectional view of the electrical switch on an enlarged scale on the line 2—2 of Figure 1 and shows the contact stem out of electrical contact;

Figure 3 is a longitudinal sectional view of the electrical switch on an enlarged scale on the line 2—2 of Figure 1, but shows the contact stem in depressed condition and making contacts to cause the visual signal or lamps to operate, and also shows one of the spring contact members which is used to cause an audible signal or buzzer to operate when the contact stem is further depressed;

Figure 4 is a detailed cross sectional view of the latch and the contact stem showing the latch having a special seat or segmental cam surface for a routed surface in the contact stem and shows the contact stem out of electrical contact;

Figure 5 is another detailed view of the latch and the contact stem with the special segmental cam surface of the latch and the routed surface of the contact stem in physical contact with each other, from which position they cannot be separated except by the positive turning operation of the switch cap or handle;

Figure 6 is a plan view of the head or supporting member of the electrical switch taken on the line 6—6 of Figure 2, showing the slot in which the spring operating arm moves;

Figure 7 is a plan view taken on the line 7—7 of Figure 2 showing by full lines the latch in its position while the lamp or lamps are not being illuminated and by dotted lines the latch in its position while the lamp, or lamps are being illuminated;

Figure 8 is a plan view somewhat similar to Figure 7 showing by full lines the latch in its position while the lamp, or lamps are being illuminated, and by dotted lines the latch in its position while the lamp or lamps are not being illminated;

Figure 9 is a side elevational view of a portion of the latch with its segmental cam; and

Figure 10 is a cross sectional view of the latch on the line 10—10 of Figure 9.

The electrical signal switch of the invention is a compact structure having contact springs which are connected to the terminals of a number of wires which in turn are connected to visual signals, which may be at the door of the patient's room, at a switchboard, annunciator, hallway or other desired place, and also has a contact spring

for a terminal for an audible signal or buzzer. The electrical switch and its terminals are usually enclosed in a casing but for convenience of illustration, the casing is not shown. The wires leading to the contact springs also are not shown.

The terminal block 15 is provided with a plurality of slots 16, and in these slots, the various contact springs are secured. Three posts 17, 18 and 19 extend from the terminal block 15 and support the head 20, which in turn is connected with the turning cap or handle 21. Each of the posts 17, 18 and 19 has a screw threaded portion at one end which screws into the head 20 and a central screw-threaded bore at the opposite end to receive the screw which passes through the terminal block.

The contact stem or plunger, generally designated 22, is provided with two annular non-metallic or fiber rings 23 and 24 with the inset annular metallic contact member 25. This contact member or band 25 is seated on a ledge 26 of the fiber ring 23, and the fiber ring 24 is brought into close contact with it so that the contact band 25 is out of electrical contact with the shaft 27 of the contact stem 22. The coil spring 28 is placed upon the shaft 27 between the fiber ring 23 and the terminal block 15. The inner end of the shaft 27 moves in the aperture shown at 29 in the terminal block 15, and the other end of the shaft is screw-threaded at 30 and a push button 31 of insulated material is secured thereon.

The shaft 27 is also provided with the collar 32 which has the enlarged collar portion 33 which is against and holds the fiber ring 24 in place against the contact ring or band 25. At the other end of the collar 32, there is an inwardly extending annular cam surface 34.

The switch head 20 is provided with a swinging bar or latch 35 which is pivoted on the pivot post 36, one end of which is secured in the switch head 20. The latch is provided with a post 37 to which one end of the coil spring 38 is secured. The latch is also provided with the aperture 39. At one side of the aperture 39, and extending to an outer edge of the latch 35 is the inclined cam surface 40. At the end of the latch opposite the pivot post 36, the latch is cut out at 41 and has the extended portion 42 which is adjacent the post 17 at the end of the movement of the latch.

The spring 38 which has its one end secured to the post 37 has its other end secured to the post 43, which latter post is on the under surface of the turning handle 21. The post 43 which is integral with the handle 21 extends through the elongated slot 44 in the head 20. The pivot post 36 has a head portion and a reduced screw-threaded portion, which screw-threaded portion extends through the aperture in the latch 35 and also into an aperture in the head 20, where it is screw-threaded into place and serves as the pivot post for the latch 35. The post 37 has a reduced portion around which the end of the spring 38 is secured. As stated, the other end of the spring 38 is secured to the post 43.

The spring 38 has a two fold purpose and use. First, to pull the latch 35 to cause the latch 35 to swing to place the segmental cam surface 40 in physical contact with the routed cam surface 34 of the contact stem and second, to return the cap or handle 21 to normal inoperative position after the handle has been turned to release the contact stem 22. The switch head 20 has an annular shoulder or collar 45, the top of which is adjacent the latch 35. The turning handle 21 is also provided with an annular shoulder or collar 46 which is an integral part of the turning head 21. This shoulder or collar 46 fits concentrically within the shoulder or collar 45 which is in the head 20. These collars turn within each other and are limited in their travel by the post 43 and the elongated slot 44. The inner periphery of the collar 46 is rolled over a washer seated on the shoulder or collar 45 and holds the two collars in proper secured and turning relation.

In the operation of the electrical switch of the invention, as stated, the normal position of the parts before any signals are made is that shown in Figure 2. It will be seen that the push button 31 is at its extreme right-hand or outer position. The spring 38 is contracted and the stud or pin 43 is in the elongated slot 44 in the position shown in Figure 6. The projecting end portion 42 of the latch 35 is resting against the supporting post 17. The cam surface 34 is not in contact with the cam surface 40, but the enlarged portion 32 of the contact stem 22 extends through the aperture 39 of the latch 35 (see Figs. 2 and 4). The fiber ring 24 with the adjoining contact band or ring 25 and the fiber ring 23 are toward the head 20 and the handle 21. At this time, the spring 28 is expanded and the end of the shaft 27 is to the right in the opening 29. Also at this time, the contact band or ring 25 is out of electrical contact with all of the contact springs which are fastened in the terminal block 15.

It will be understood that there may be any number of these contact springs secured in the block 15, and each of them is provided with an outer protecting or guard strip 47 as shown. These guard strips are not in the electrical circuit but may be utilized by means of stampings to indicate the nature or character of the spring contact beneath. It will be understood also that the contact ends of the contact springs 48 for the visual or lamp signals are the long ones, and there may be a number of these depending on how many lamp signals are to be operated, and that the contact end of the contact spring 49 for the audible or buzzer signal is the short one. It will also be understood that the two contact springs 50 and 51 are terminals of the battery circuit. The longer spring 51 completes the circuit to the lamp or lamps by contacting with the ring 25 when the contact stem 22 is partially depressed, and the shorter spring 50 completes the circuit to the bell or buzzer by contacting with the ring 25 when the contact stem 22 is completely depressed.

While the parts which have been described are in the positions shown in Figure 2, the lamps are not burning nor is the buzzer operating. At this time, the handle 21 may be moved a short distance against the action of the spring 38, and when thus moved, the post 43 is moved over against one side of the latch 35, but this does not affect the operation of the signal switch so far as the signaling is concerned.

When the push button 31 is depressed inwardly, as shown in Figure 3, the contact stem 22 is also moved inwardly contracting the spring 28, causing the shaft 27 to move in the opening 29. The lamp springs 48 are then brought into contact with the contact ring or band 25 causing the lamps to be illuminated. At this time, the buzzer spring 49 is not in contact and therefore the buzzer is silent.

As the button 31 is being depressed to the lighting position, the contact stem 22 is being moved inwardly. Simultaneously the latch 35 is caused

to swing on the pivot 36 to a position adjacent the post 43 and the post 43 with the handle 21, of which the post is an integral part, is held against the tension of the spring 38. When the button 31 is depressed moving the contact stem 22 inwardly and against the action of the spring 28, the routed surface 34 travels on the segmental surface 40 of the latch 35. The movement of the contact stem 22 being inwardly in a straight line with the surface 34 contacting the surface 40, causes the latch 35 to swing away from the enlarged portion 32 of the contact stem and moves the part 42 away from the post 17, as shown in the dotted line position, Figure 7.

As soon as the latch 35 snaps into this last mentioned position due to the action of the spring 38, upon release of the thumb or finger from the push button 31, the contact stem 22 moves outwardly a slight distance and it seats and rests upon the recess surface 40 of the latch 35. At this time, the two surfaces 40 and 34 are in physical contact at the top portion of the inclined cam recess surface 40 and the contact stem 22 is in locked position on the latch 35 and cannot be released therefrom except by the positive and manual turning or rotating action in a clockwise direction of the handle or cap 21. This inclined cam surface 40 being eccentrically arranged with respect to the aperture 39 and the latch 35 being over to one side or in an offset position against the post 43, it will be understood that the enlarged portion 32 of the contact stem is eccentrically poised with respect to and before the aperture 39. At this time, the push button is inwardly depressed, but not to its full extent. In this locked position, the lighting or visual signals are burning or operating ready for the response of the nurse or other attendant, since the contact 25 completes the lighting circuits, through the battery spring 51 as has been explained.

Upon further depression of the contact stem 22, the lamps become extinguished because the contact band 25 has been forced inwardly away from the spring terminals 48 and the contact 25 has been brought into contact with the bell or buzzer spring terminal 49 and the battery spring 50. In order to cause the buzzer to sound, it is necessary to keep the push button 31 depressed by action of the thumb or finger and against the action of the spring 28. When so depressed to its limit, the lamps extinguish, but the buzzer sounds.

If the patient or other person should become impatient because of lack of attendance by the nurse or other attendant, the push button may be intermittently depressed from its first position, with the lamps burning, to its second position, with the lamps out but the buzzer sounding, thus causing a flickering of the lights at the door, annunciator, switchboard or other place, and also the intermittent sounding of the buzzer. Until the handle 21 is turned, either the lamps are burning or the buzzer is sounding since the push button 31 remains depressed, that is, in either its first depressed position or in its second depressed position.

When the contact stem 22 is moved away from the lighting position to the ringing or sounding position, the surfaces 34 and 40 are disconnected from each other since the contact stem 22 is moved away from the latch 35, but the latch remains stationary and does not move. Upon release of the thumb or finger from the button 31, the stem 22 with the button 31 moves outwardly and the inclined routed surface 34 resumes contact with the inclined cam recess surface 40. In so doing, however, it does not disturb the latch 35 since that remains stationary on its pivot 36 and against the under surface of the head 20. All of this time, the latch 35 keeps the way barred for the return of the stem 22 and locks it and prevents its return to the full outward position until and unless the handle or cap 21 is turned or revolved to move the latch 35 and get the recess surface 40 out of the way.

When the nurse or other attendant responds to the call initiated by the operation of the electrical switch, the release and unlocking of the switch is effected by merely turning the handle 21 a short distance in a clockwise direction. As stated, a very important point in connection with the electrical switch of the invention is the fact that the switch may be turned off by the turning or revolving of the handle or cap as distinguished from the depression of an auxiliary button, lever or other contrivance such as is generally used.

It may also be released by one hand instead of two hands. In other words, the entire device may be held in the hand and the handle 21 turned by the thumb and a finger of that hand. This is an important feature, because the nurse or other attendant may have a tray, instruments or other articles or devices in one hand, thus leaving the other hand free to operate the switch and turn out the lamps.

As has been stated, the release and unlocking of the contact stem 22 with the contact band 25 is effected by the turning of the handle or cap 21 in a clockwise direction. As the cap is turned, the post 43 travels alongside the side of the latch 35, against the action of the spring 38, and swings the latch on the pivot 36 and causes the portion 42 of the latch to move toward the post 17. As the latch 35 is being forced by the post 43, the latch 35 slides and causes the inclined cam recess surface 40 to become disengaged from the routed surface 34. When the post 43 has reached its limit of movement in the slot 44 and the two surfaces 34 and 40 have become disengaged, the enlarged portion 32 is before the aperture 39 and the contact stem 22 snaps into the aperture 39 due to the release and unlocking operation which has been described, including the action of the spring 28. This reverses the button 31 from the position shown in Figure 3 back to the position shown in Figure 2, and ready to be used again for signaling by the patient.

What I claim and desire to secure by Letters Patent is:

1. In an electrical signal switch the combination of a handle, a signal spring, a spring connected with a source of power, a contact stem adapted to electrically connect said springs, a swinging flat latch, said latch and said stem having cooperative means for making and breaking said electrical connection, said means consisting of a segmental inclined cam cut in one surface of said latch and an inclined surface in said stem with which said segmental inclined cam connects, said flat latch being pivoted to cause said segmental inclined cam surface to travel on the inclined surface of said stem because of the turning of said handle, a coil spring, the action of the handle being partly controlled by the spring, one end of the spring being attached to said flat latch adjacent its pivoted end and the other end to a stud integrally secured to said handle.

2. In an electrical signaling switch the combination of a handle, a head, said handle having a collar and adapted to turn in said head, a terminal block, said terminal block and head being connected together, a contact stem extending through said handle and head and into said terminal block, said contact stem being spring-operated and having a contact band, battery, lamps and buzzer springs secured in said terminal block, the ends thereof adapted to contact with said contact band, a swinging flat latch, said latch having an inclined segmental cam surface cut in one surface of said latch and said contact stem having an inclined cam surface, said cam surfaces registering and contacting with each other on operation of said contact stem, said contact stem being operable to at one time illuminate said lamps and at another time to sound said buzzer, said contact stem being released by the turning of said handle and the swinging of said latch, said latch being pivoted at one end to said head and having a coil spring connected adjacent the pivoted end of said latch, a stud on said handle, an elongated aperture in said head, said stud extending through said elongated aperture, the other end of the latch coil spring being secured to said stud to operate said latch and place it in position to permit the contact stem to register and contact with said latch cam surface whereby said contact stem and battery and lamp contacts are made.

3. In an electrical signaling switch the combination of a handle, a head, said handle having a collar and adapted to turn in said head, a terminal block, said terminal block and head being connected together, a contact stem extending through said handle and head and into said terminal block, said contact stem being spring-operated and having a contact band, battery, lamps and buzzer springs secured in said terminal block, the ends thereof adapted to contact with said contact band, a swinging flat latch, said latch having a cam surface cut in one surface of said latch and said contact stem having an inclined cam surface, said cam surfaces registering and contacting with each other on operation of said contact stem, said contact stem being operable to at one time illuminate said lamps and at another time to sound said buzzer, said contact stem being released by the turning of said handle and the swinging of said latch, said latch being pivoted at one end to said head and having a coil spring connected adjacent the pivoted end of said latch, a stud on said handle, an elongated aperture in said head, said stud extending through said elongated aperture, the other end of the latch coil spring being secured to said stud to operate said latch and place it in position to permit the contact stem to register and contact with said latch cam surface whereby said contact stem and battery and lamp contacts are made and also holding said latch in position by the action of the latch coil spring while the contact stem is further depressed to sound the buzzer on further depression of said contact stem and not permitting the release of the contact stem, battery and lamp contacts until the turning of said handle and the swinging of said latch.

4. In an electrical signaling switch the combination of a handle which turns, a latch operating stud secured to said handle, a collar on said handle, a head, said head having a central aperture and a collar surrounding said aperture, and also an elongated aperture along one side of its collar for the reception of the stud secured to said handle, the handle collar fitting and turning within the head collar and the stud simultaneously turning in the elongated aperture in the head, a swinging flat latch pivoted in said head, said latch having an aperture, a coil spring secured to the adjacent pivot end of said flat latch and also to the handle stud to operate said latch, a segmental inclined cam cut in one surface of said latch adjacent said aperture, a contact stem, said stem having an electrical contact, said stem also having an enlarged portion and a routed cam surface within said enlarged portion adapted to contact and register with the cam surface of said latch, a coil spring adapted to force said stem into position against the cam surface of said latch, said cam surfaces of said latch and said stem being releasable by the turning of said handle.

WILLIAM P. CROCKETT, JR.