A. BALLENBERG, DEC'D.

F. BALLENBERG, EXECUTRIX.

BEDSTEAD.

APPLICATION FILED AUG. 14, 1917.

1,288,471. Patented Dec. 24, 1918.

FIG. 1.

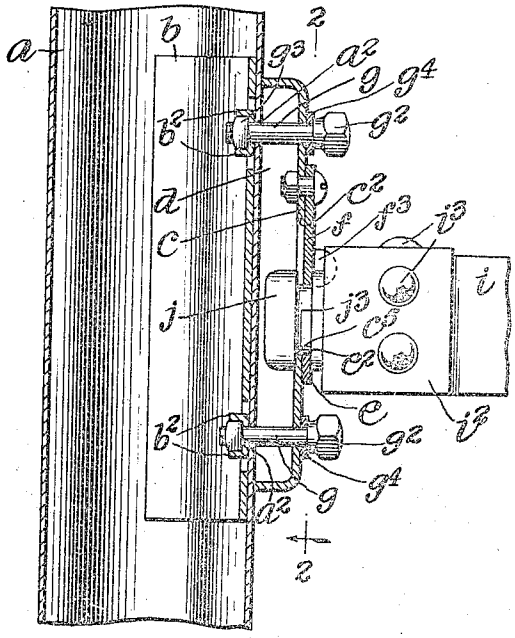

FIG. 2.

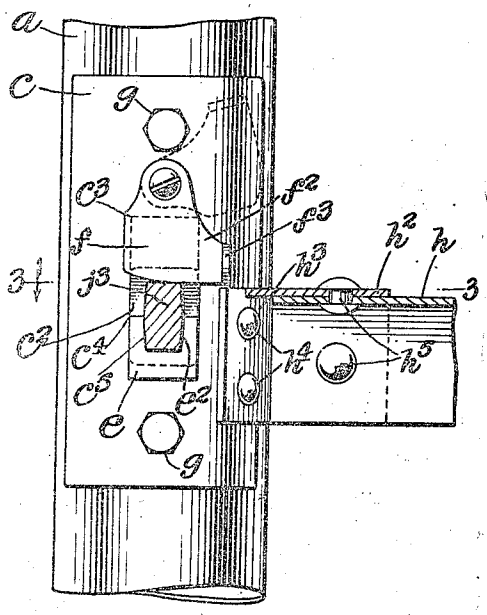

FIG. 3.

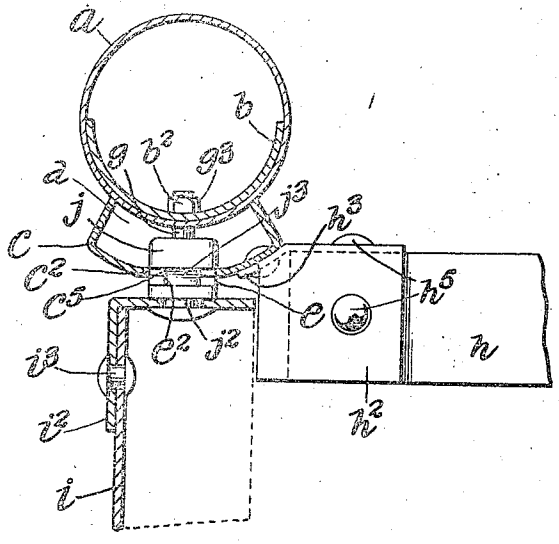

Inventor

Adolph Ballenberg,

By his Attorneys

Edgar Tate & Co.

UNITED STATES PATENT OFFICE.

ADOLPH BALLENBERG, OF NEW YORK, N. Y.; FANNIE BALLENBERG EXECUTRIX OF SAID ADOLPH BALLENBERG, DECEASED.

BEDSTEAD.

1,288,471. Specification of Letters Patent. Patented Dec. 24, 1918.

Application filed August 14, 1917. Serial No. 186,090.

To all whom it may concern:

Be it known that I, ADOLPH BALLENBERG, a citizen of the United States, and residing at New York, in the county of New York and State of New York, have invented certain new and useful Improvements in Bedsteads, of which the following is a specification, such as will enable those skilled in the art to which it appertains to make and use the same.

This invention relates to bedsteads and particularly to means for connecting the end and the side rails with the corner posts, and the object thereof is to provide an improved construction for this purpose whereby the side rails are detachably and reversibly connected with the corresponding corner posts by means of a construction whereby such operation may be quickly and easily performed without the use of tools or implements of any class; and whereby the end rails are secured to the corresponding corner posts by a simple and effective construction, part of which is also employed in making the connection of the side rails with said posts; a still further object being to provide means whereby the detachable side rails may be locked in operative position in which condition they cannot be detached.

Another object of this invention is to provide a construction of the class specified which is particularly designed for use in connection with what are known as metal bedsteads, but which may be used in connection with bedsteads formed from any desired material.

The invention is fully disclosed in the following specification, of which the accompanying drawing forms a part, in which the separate parts of my improvement are designated by suitable reference characters in each of the views, and in which:—

Figure 1 is a sectional side view of one of the corner posts of a bedstead made of sheet metal and showing one of the side rails and the method of connecting it with the post;

Fig. 2 a section on the line 2—2 of Fig. 1; and,

Fig. 3 a section on the line 3—3 of Fig. 2.

In the drawing forming part of this specification, I have shown at a one of the corner posts of a bedstead and said post, in the construction shown, is tubular in form and is made of sheet metal and, in the practice of my invention I mount on the inner side of the post a reinforcing plate b which is arc-shaped in cross section and provided at intervals with spaced inwardly directed ears b^2 which are arranged in pairs and the post a is provided with corresponding apertures a^2.

I also mount on the outer side of the post a, a bracket plate c which is oblong in form and box-shaped in cross section, and between which and the post is a vertical space d, and the bracket plate c is provided with a central, vertical, oblong aperture c^2, which is rectangular in form and which extends from the point c^3 downwardly to the point c^4, and the lower end of which is provided with a downwardly directed extension c^5, the side walls of which are inwardly inclined or beveled, and secured on said bracket plate c below the aperture c^2 is a reinforcing plate e having a recess e^2 which corresponds with the downwardly directed extension c^5 of the aperture c^2, and pivoted to the bracket plate c above the aperture c^2 is a cam lock device f having a laterally directed extension f^2 provided with a thumb and finger piece f^3 which serves as a handle by which said lock device may be manipulated.

The bracket plate c is secured to the post a by bolts g which are passed inwardly through said bracket plate and through the apertures a^2 in the post a and through corresponding apertures in the reinforcing plate b between the ears b^2, and said bolts are provided at their outer ends with heads g^2 and at their inner ends with nuts g^3 which fit between the ears b^2, and said ears operate as locks for the nuts g^3 and prevent the rotation thereof, and between the heads of said bolts and the bracket plate c are preferably placed washers g^4.

From the foregoing description it will be seen that the plate b is secured to the post a by the bolts g, and said plate serves as a means for reinforcing said post and also to reinforce and strengthen the bracket plate c which serves as an attachment for the rails, as hereinafter described.

I have also shown at h in the accompanying drawing, one of the end rails of a bedstead and at i one of the side rails, and in connecting the end rail h with the bracket plate c I provide an L-shaped bracket h^2 having an arc-shaped corner plate h^3 which is riveted to the bracket plate c as shown at

h^4, and the end rail a is riveted or bolted in the L-shaped bracket plate h^2 as shown at h^5.

In connecting the side rail i with the bracket plate c, I provide a box-shaped bracket i^2 in which the end of the rail i is riveted or bolted as shown at i^3, and said bracket i^2 is provided with a coupling head j which is riveted thereto, as shown at j^2, and said coupling head is provided with a reduced shank j^3, the opposite side walls of which both at the top and bottom are beveled or inclined as shown in Fig. 2 to correspond with the bevel or incline of the side walls of the recess e^2 in the reinforcing plate e and the walls of the extension c^5 of the aperture c^2.

In connecting the side rail with the corner post the cam lock f is raised into the position shown in dotted lines in Fig. 2, and the coupling head j is passed inwardly through the aperture c^2 in the bracket plate c and said rail is dropped downwardly into the position shown in Figs. 1 and 2, in which position the shank j^3 of the coupling head j enters the aperture c^5 and recess e^2, as shown in Fig. 2, after which the cam lock device f is turned downwardly into the position shown in full lines in Fig. 2, and the side rail is locked in connection with the corner post as will be readily understood, and from the foregoing description it will be seen that the position of the side rail may be reversed, if desired, at any time by simply detaching it and turning it over.

The side and end rails in the construction shown and described are L-shaped in cross section, or composed of what is commonly known as angle-iron and the corresponding attaching parts are similarly formed, but my invention is not limited to the shape in cross section of any of said parts, and while I have shown and described the construction which I prefer to employ, my invention is not limited to the details thereof as herein set out, and changes therein and modifications thereof may be made, within the scope of the appended claim, without departing from the spirit of my invention or sacrificing its advantages.

Although I have shown and described the connection of the end and side rails with but one corner post, it will be understood that the connection of said rails with all of said posts is made in the same manner.

Having fully described my invention, what I claim as new and desire to secure by Letters Patent, is:—

A rail attaching and lock device for the corner posts of bedsteads comprising a bracket plate, and means for securing said plate to a corner post; said bracket plate being provided with an aperture having a downwardly directed tapered extension, and the end of the rail to be connected with said bracket plate being provided with a head and reduced neck portion having oppositely arranged beveled portions adapted to enter the downwardly directed beveled extension of the aperture in said bracket plate and a cam lock device pivoted to said bracket plate above said aperture and adapted to operate in connection with said reduced neck portion to lock said rail in connection with said bracket plate.

In testimony that I claim the foregoing as my invention I have signed my name in presence of the subscribing witnesses this 13th day of August, 1917.

ADOLPH BALLENBERG.

Witnesses:
H. E. THOMPSON,
C. E. MULREANY.