June 3, 1958 H. J. HEINDEL ET AL 2,837,741

DIRECTIONALLY ADJUSTABLE RADIO RECEIVER ANTENNA

Filed June 11, 1956 2 Sheets-Sheet 1

Fig. 1.

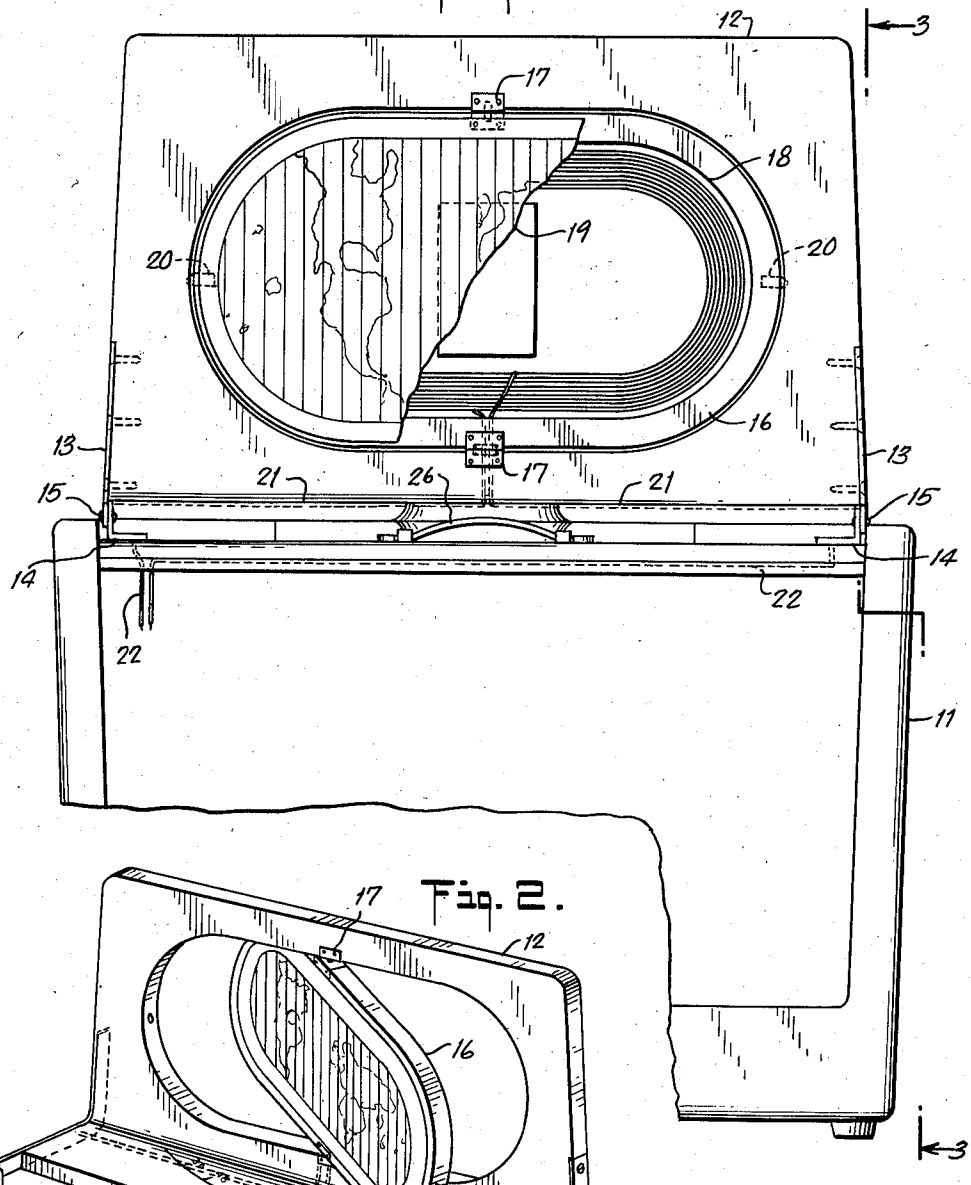

Fig. 2.

BY

INVENTORS
HAROLD J. HEINDEL
ERNST GROSCHOFF
EMIL JOSS
Darby & Darby
ATTORNEYS

June 3, 1958 H. J. HEINDEL ET AL 2,837,741

DIRECTIONALLY ADJUSTABLE RADIO RECEIVER ANTENNA

Filed June 11, 1956 2 Sheets-Sheet 2

Fig. 5.

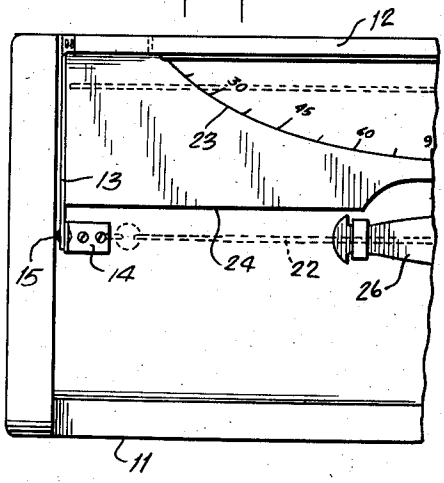

Fig. 6.

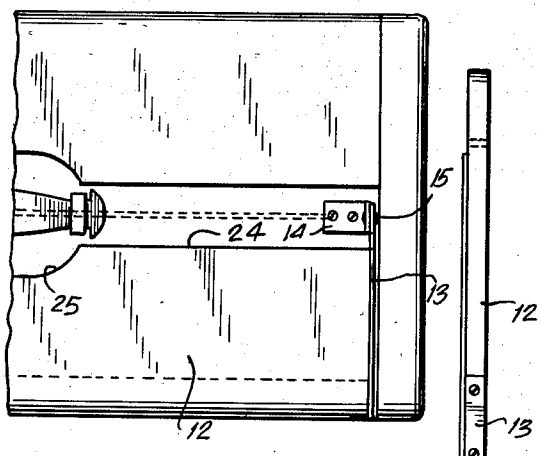

Fig. 4.

Fig. 3.

INVENTORS
HAROLD J. HEINDEL
ERNST GROSCHOFF
EMIL JOSS

BY Darby & Darby
ATTORNEYS

United States Patent Office 2,837,741
Patented June 3, 1958

2,837,741

DIRECTIONALLY ADJUSTABLE RADIO RECEIVER ANTENNA

Harold J. Heindel, Munsey Park, Ernst Groschoff, Glen Head, and Emil Joss, Huntington, N. Y., assignors to Andrea Radio Corporation, Long Island City, N. Y., a corporation of New York

Application June 11, 1956, Serial No. 590,624

3 Claims. (Cl. 343—702)

The present invention relates to directionally adjustable antennas for radio receivers and more particularly to such antennas incorporated as a part of a radio receiver cover.

The present invention represents an improvement over known adjustable antennas for radio receivers in that it provides an antenna adjustably mounted in a receiver cover in a novel manner which is more compact and better adapted to preferred shapes of receivers, and which may include an azimuthal scale to aid in the adjustment of the antenna. In addition, the antenna carrying cover is so designed to provide a place for an azimuthal scale and at the same time the cover does not interfere with the radio handle in either the closed or open position.

It is an object of the present invention to provide a radio receiver incorporating a directionally adjustable antenna in the cover thereof.

It is another object of the invention to provide a cover incorporating a directional antenna which is adapted to be used on presently preferred shapes of portable radio receivers.

It is still another object of the invention to provide such a radio receiver with cover hinges adapted to form a part of the conductive connections between the antenna and the receiver.

It is still another object of the present invention to provide a combination cover and directionally adjustable antenna wherein the antenna with its housing also serves as a part of the cover for the receiver.

It is a further object of the invention to provide a radio receiver with a directionally adjustable antenna and an azimuthal scale for determining the angle at which the antenna is turned.

A still further object of the invention is to provide an antenna incorporating receiver cover which does not interfere with the handle on the top of a radio receiver in either the open or the closed position of the cover.

Other objects will become apparent from consideration of the following description and of the appended drawings, in which

Fig. 1 is a front elevational view of a radio receiver with directionally adjustable antenna incorporated in the cover, partially cut away to show the antenna;

Fig. 2 is a perspective view of the receiver cover showing the adjustable antenna turned at an angle;

Fig. 3 is a side elevational view of the device shown in Fig. 1 cut away to show the electrical connection to the antenna and in which the receiver is shown with the cover in the open position;

Fig. 4 is a side elevational view of the device shown in Fig. 1 with the cover in the closed position;

Fig. 5 is a partial top plan view of the device shown in Fig. 1 with the cover open showing the scale on the cover;

Fig. 6 is a partial top plan view of the device shown in Fig. 1 with the cover in the closed position.

Referring to the drawings, there is shown at **11** a radio

receiver cabinet with a cover **12** of L-shaped cross section as shown in Fig. 3. The cover **12** has attached thereto two L-shaped hinged brackets **13** which are attached by means of the hinge pins **15** to cabinet hinge brackets **14**. The cabinet hinge brackets are attached to the top of the cabinet. An oval antenna mount **16** is placed in a corresponding opening in the cabinet **12** where it is pivotally supported by pivot fixtures **17**. Although the antenna mount **16** is shown to be oval in shape, it may equally well be made of rectangular or of any other shape. A loop antenna **18** is secured in a recessed position in the antenna mount **16** and the antenna is covered by the antenna cover **19**. The shape of the antenna loop may or may not conform to the outline of the antenna mount. Spring catches **20** are provided at the ends of the antenna mount **16** to prevent accidental displacement of the mount from its closed position. One of the spring catches **20** may be omitted or may be replaced with a stop member adapted to prevent rotation of the antenna mount past the stop. Connected to the antenna **18** are two electrical leads **21** which pass from the antenna mount **16** to the cabinet cover **12** at points adjacent to the lower pivot fixture **17** and continue to respective hinge brackets **13** to which they are conductively attached. The hinge brackets **13**, the pins **15**, and the cabinet hinge bracket **14** form a part of the electrical circuit from antenna to receiver. The cabinet hinge brackets **14** are conductively attached to respective receiver leads **22** which lead to the antenna terminals of the receiver (not shown).

In Fig. 2 there is shown an azimuthal scale **23** on the short segment **24** of the L-shaped receiver cover **12** adapted to measure the angle of the antenna mount **16**. The receiver cover **12** is cut away along the edge of the short segment **24** to provide a recess **25** adapted to accommodate a handle **26** on the top of the receiver cabinet **11**.

Normal closed position of the receiver cabinet cover can be seen in Fig. 4 where it is apparent that the antenna mount **16** and cover **19** cooperate with the receiver cover **12** to completely close the front of the receiver cabinet and that in the closed position the handle **26** is accessible for carrying the receiver.

The cover may be readily opened to the position shown in Fig. 3 thereby giving access to the interior of the front of the cabinet where the receiver controls (not shown) are located. The cover **12** remains in the open position without the necessity of holding or latching means and the handle **26** is accessible for carrying the receiver when the cover **12** is in the open position.

The antenna mount **16** is normally retained in its closed position in the opening in the cover **12** by the spring catches **20**. As previously explained only one catch may be provided and a stop member to prevent excessive rotation of the mount may be substituted for the other catch **20**. However, after the cover is placed in the open position the antenna may be manually pivoted about the pivot fixtures **17** in order to orient the antenna **18** for best radio reception. Slack is provided in the antenna leads **21** and the leads pass through or close to the lower pivot fixture **17** so that the antenna mount **16** may be turned approximately 180° without placing any strain on the antenna leads. The hinge brackets **13** and **14** complete the electrical circuit to the antenna irrespective of the position of the cover. It should be noted also that the antenna is in a vertical plane when the cover is closed and is thereby positioned for good reception even with the cover closed.

With the cover open the scale **23** may be used in setting the antenna **18** to a particular angle previously determined to achieve optimum reception or to determine the angle of best reception for future reference.

From the foregoing description of the operation of the cover and antenna it may be seen that a cover is provided which is hinged on its longest dimension and which resides in a vertical plane in both the closed and open position, and that the cover is shaped to provide a place for an azimuthal scale which resides in a horizontal plane when the cover is in the open position. The cover is hinged and shaped in such a manner that it does not interfere with a handle centrally located on the top of the cabinet regardless of the position of the cover. The device shown also provides means for rotating the antenna through at least 180° in order to intercept the maximum radiated energy.

Those skilled in the art will readily see that many modifications of the described embodiment of the invention may be made within the scope of the present invention and accordingly the above description is not to be construed in a limiting sense but rather the scope of the invention is to be limited solely by the appended claims.

What is claimed is:

1. A radio receiver case comprising a cabinet, a cabinet cover of L-shaped cross-section, means for hingedly attaching the portion of said cover near the end of the short leg of said L to a point on the top of said cabinet approximately midway between the front and rear thereof, an antenna pivotally affixed in an aperture in said cover, the axis of said antenna being perpendicular to the axis of said hinge means, and an azimuthal scale placed upon the short leg of said L-shaped cover and centered at the axis of said antenna.

2. A radio receiver case comprising a cabinet, a cabinet cover of L-shaped cross-section having an opening therein, a hinge attaching the portion of said cover near the end of the short leg of said L to a point on the top of said cabinet approximately midway between the front and rear thereof, a loop antenna pivotally affixed in the opening in said cover for movement about an axis perpendicular to the axis of said hinge, an azimuthal scale placed upon the short leg of said L-shaped cover and centered at the axis of said antenna, and means forming a conductive path from said antenna through the pivot point of said antenna to said cabinet cover and thence through said hinge to said cabinet.

3. A radio receiver case comprising a cabinet, a cabinet cover, hinge means with horizontal axis pivotally attaching said cover to said cabinet for movement through approximately 180 degrees, an antenna pivotally attached to said cover about an axis perpendicular to said hinge axis and thereby adapted to be adjusted for optimum radio reception, conductive means connected to said antenna and adapted to be connected to said receiving apparatus, said cabinet cover being of L-shaped cross-section, and an angular scale on the leg of said L at right angles to said antenna axis for determining the angle at which the antenna is turned.

References Cited in the file of this patent

UNITED STATES PATENTS

1,763,382	Van Dyck	June 10, 1930
1,804,000	Derry	May 5, 1931
2,381,334	Brownshield	Aug. 7, 1945
2,447,576	Gustafson	Aug. 4, 1948