July 10, 1945. M. KURILLO 2,380,114

MOUNTING FOR ELECTRIC FUSES

Filed Dec. 16, 1941 3 Sheets-Sheet 1

Fig. 1.

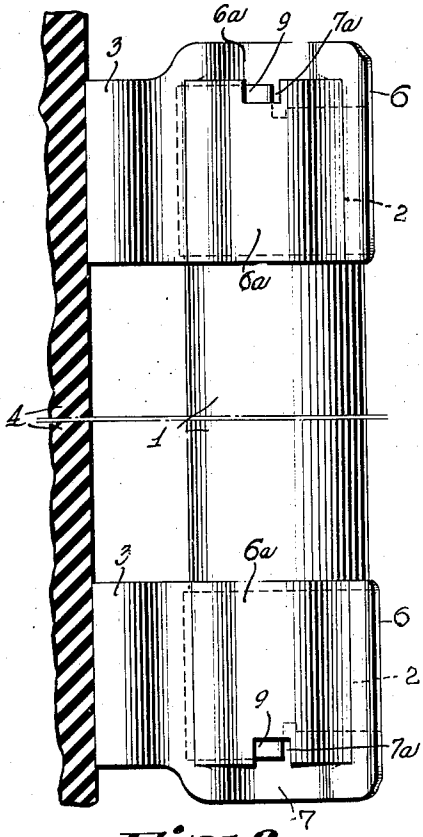

Fig. 3.

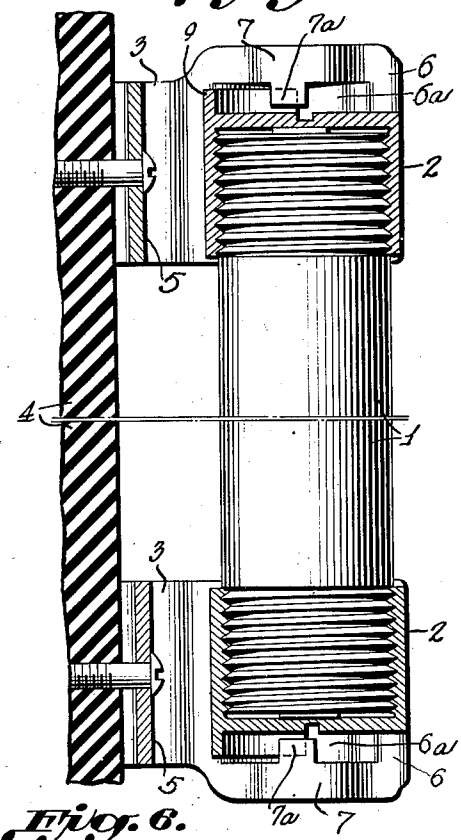

Fig. 2.

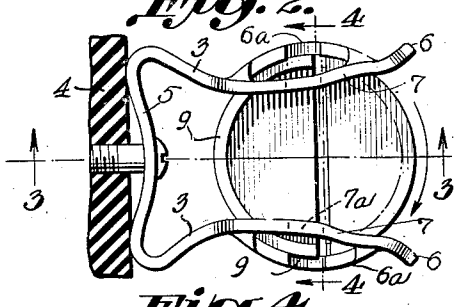

Fig. 6.

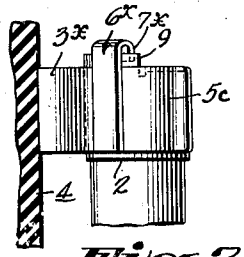

Fig. 5.

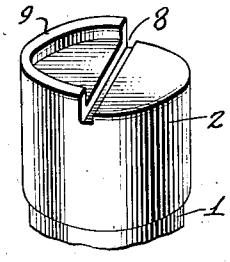

Fig. 4.

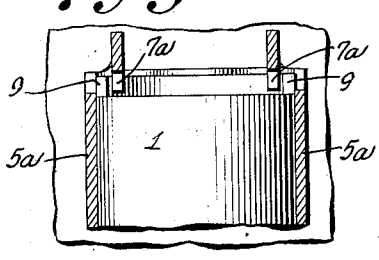

Fig. 7.

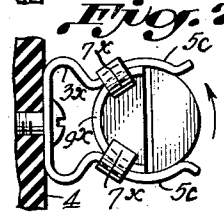

Inventor;

MAX KURILLO

By Knight Bros

Attorneys.

July 10, 1945. M. KURILLO 2,380,114

MOUNTING FOR ELECTRIC FUSES

Filed Dec. 16, 1941 3 Sheets-Sheet 2

Fig. 8.

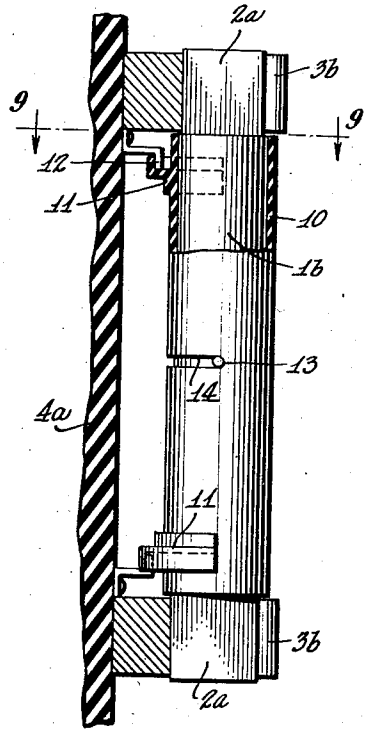

Fig. 10.

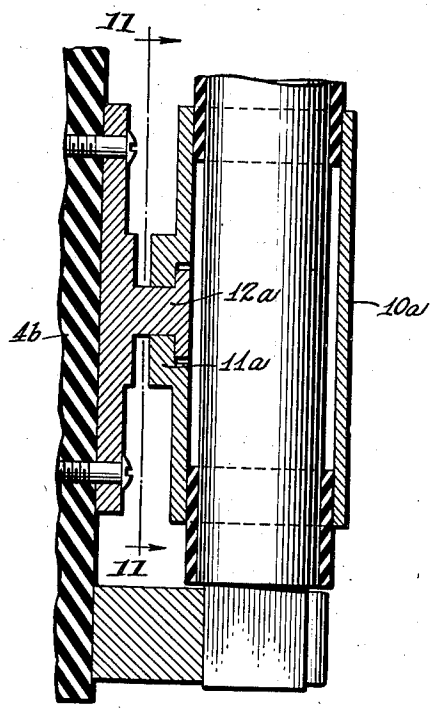

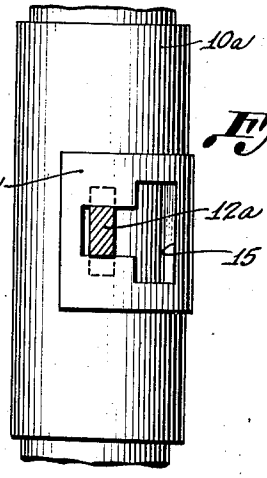

Fig. 9.

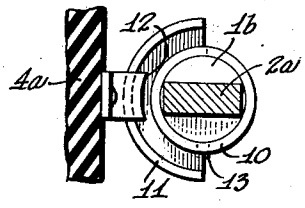

Fig. 11.

Inventor:

MAX KURILLO,

By Knight Bros

Attorneys.

July 10, 1945. M. KURILLO 2,380,114

MOUNTING FOR ELECTRIC FUSES

Filed Dec. 16, 1941 3 Sheets-Sheet 3

Fig. 12.

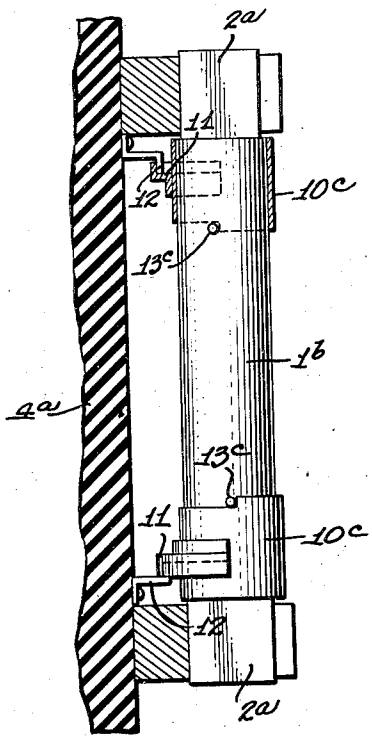

Fig. 13.

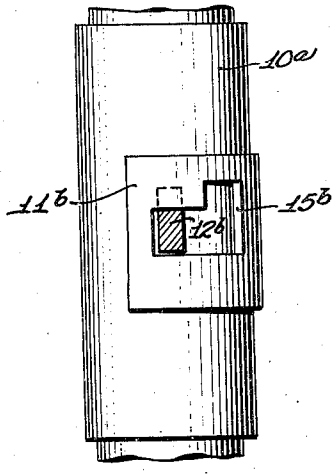

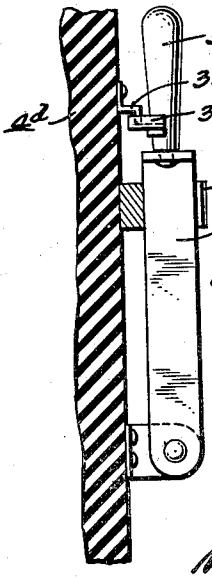

Fig. 15.

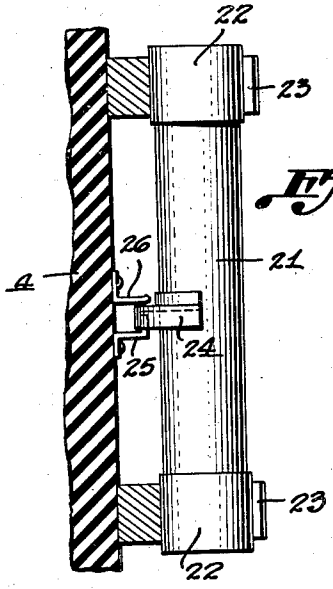

Fig. 14.

Inventor

MAX KURILLO

By Knight Bros.

Attorney

Patented July 10, 1945

2,380,114

UNITED STATES PATENT OFFICE

2,380,114

MOUNTING FOR ELECTRIC FUSES

Max Kurillo, Washington, D. C., assignor of one-third to Knight Bros., Washington, D. C.

Application December 16, 1941, Serial No. 423,247

9 Claims. (Cl. 200—134)

This invention relates to an electric fuse mounting and more particularly to a fuse mounting of the cartridge type having for its object to permit the convenient interchangeability of such fuses while incorporating them in interlocking relationship with their mountings in order to prevent any unintentional dislodgement of the fuses from their mountings as a result of vibrations, shocks, explosions and the like, at which times the circuits protected by such fuses are most essential. The invention is of vast importance in its application to switchboards on marine installations particularly in times of warfare and by the same token is highly useful in power plants of land installations.

This invention, while capable of a rather wide range of application to conventional forms of fuses, is herein illustrated in its preferred application to a mounting for an electric circuit-protecting fuse of the type in which a cartridge-like housing enclosing the fusible link of the fuse, has conducting terminals, for instance ferrules or blades that are thrust, by bodily movement of the fuse, into cradle like assembly with the jaws of current-feeding clips.

The invention is identified by providing upon this or some other appropriate type of fuse and mounting, means whereby the fuse, by a movement in addition to its bodily assembly movement, is caused to interlock against a clip or clips, or unlock to permit displacement of the fuse from the clips; such locking and unlocking movements preferably consisting of rotation of the body of the fuse or some rotatable portion thereof about the longitudinal axis of the fuse; and the locking and unlocking means comprising, preferably, projections carried, respectively, by the fuse and by the clip or other part of the mounting, said projections operating by the rotary movement of the fuse or part thereof, to interfere or interengage and prevent the disassembly movement.

In the accompanying drawings in which are shown several embodiments of the invention:

Figures 1, 2 and 3 are respectively a side elevation, an end elevation and a longitudinal section on the line 3—3 of Figure 2 showing a preferred embodiment of the invention;

Figure 4 is a section through one end of the fuse and its clip taken on the line 4—4 of Figure 2;

Figure 5 is a detail perspective view of one end of the fuse, showing the semi-cylindrical lip or projection by means of which the fuse interlocks with its clip;

Figure 6 is a detail view, in side elevation, of one end of a modified construction of a fuse and its mounting;

Figure 7 is an end elevation of the fuse and mounting shown in Figure 6;

Figures 8 and 9 are, respectively, side and end elevations partly in section of an embodiment of the invention appropriate for knife blade fuses;

Figures 10 and 11 are, respectively, a side elevation partly in section and a section on the line 11—11 of Figure 10 showing another embodiment of the rotary sleeve type of fuse locking means;

Figure 12 is a side elevation with certain parts in section of a different embodiment of the invention shown in Figure 8;

Figure 13 is a sectional view of a different embodiment of the invention shown in Figure 11;

Figure 14 is a side elevation of a different embodiment of the invention shown in Figure 1; and

Figure 15 is a side elevation of another embodiment of the invention incorporated in a switch.

Referring to Figures 1, 2 and 3, 1 represents a fuse of cartridge type having terminals 2 of ferrule form adapted to be introduced bodily into the embrace of the resilient jaws 6 of clips 3 mounted on insulating base 4. Clips 3 are preferably struck up from plate metal, by dies producing an attaching yoke 5, arched so that depression of its crest increases pressure of jaws 6 upon the fuse; also producing arcuate seats 6a for embracing the fuse; also chordal strips 7 distending the arcs of said seats and providing abutments that confine the fuse endwise; also locking stops 7a projecting from the inner edges of said chordal strips and overlapping the arcuate locking flanges 9 on the fuse described below and completing the interlock between the fuse and the clip. Ferrule 2 may be of conventional form, screw threaded to the end of the fuse as shown in Figure 3, and may have a kerf 8 (Figure 5) to receive a screw driver. It embodies the novel feature of the coaxial arcuate lip or flange 9, which, being initially outermost during bodily movement of the fuse into its concave seats 6a, is then, by rotation of the fuse about its longitudinal axis, after the manner of the lands of a key, caused to enter space within the stationary locking lugs 7a, and there remain as a barrier to bodily removal of fuse, until the interlock is disposed of by rotation of the fuse to remove the locking flange from behind the lugs.

In Figures 6 and 7, fingers 6x mounted upon the jaws 3x project beyond the ferrule seated between the clip jaws 5c and are deflected to form lugs 7x against which the ends of the fuse abut, and

behind which the arcuate lip or flange 9 is introduced by rotation of the fuse, in order to establish the interlock against unintentional displacement of the fuse from the clips.

According to Figure 8, ferrules 2 are replaced by knife blades 2a that enter the space provided by flat clips 3b, and the rotary movement of the fuse that interlocks it against removal movement in the clips is imparted to a sleeve 10 which is of electrically non-conducting material, such as Bakelite or other readily fashioned material. The sleeve 10 carries interlocking projections having arcuate flanges 11 which are brought by the rotation of said sleeve into engagement beneath the retaining fingers 12 on the baseboard 4a. Limitation of the rotation of the sleeve 10 may be imposed through means of pin 13 in the body of the fuse 1b engaging in slot 14 of limited arcuate extent, in the sleeve 10. If it be desired to construct the sleeve 10 of metal, it will be made in two separately rotatable parts in order to avoid short-circuiting the fuse. Such a construction is shown in Figure 12, wherein the metallic sleeves 10c may be rotated to bring the arcuate flanges 11 mounted on the sleeves into engagement with the retaining fingers 12 on the baseboard 4a. Pins 13c serve to maintain the sleeves in place and define the rotational limits thereof by cooperation of shoulders on the sleeves therewith.

According to Figure 10, sleeve 10a has an enlarged portion 11a provided with a horizontally disposed T-shaped opening 15 as shown in Figure 11, which receives a T-head 12a mounted on the insulating base 4b. Engagement is made between the parts 11a and 12a at the wide portions of the T-shapes preliminary to relative rotation between these parts which causes them to interlock. Engagement between the sleeve and the fuse mounting may also be realized by other configurations of openings and engaging heads cooperating therewith, for example, by an L-shaped design, which would merely eliminate the interlocking effect of either the lower or upper portions of the head 12a. Such a construction is shown in Figure 13, wherein the parts 11b and 12b are of L-shaped design and the opening 15b is likewise of an L-shaped contour.

While the interlocking features illustrated in Figures 8 to 11 have been shown as applied to fuses having knife blade terminals which prevent the rotation of the fuse proper and necessitate the provision of sleeves which are rotatable to effect the interlocking movement which is independent of the assembly movement, such interlocking features may as well be applied to fuses having ferrule or sleeve terminals by providing projections directly on the body of the fuses rather than on rotatable sleeves disposed thereupon to interlock with engaging projections disposed upon the fuse mounting or support, similar to members 12 and 12a in Figures 8 to 11, incidental to a rotation of the fuse body to effect interlocking engagement of the fuse mounting therewith. Such a construction is shown in Figure 14, wherein the cylindrical fuse body 21 is provided with cylindrical ferrules 22 which are adapted to be brought into embrace between the spaced spring fingers 23 of conventional construction. Subsequent to the assembly of the fuse into the embrace of the clips, the fuse is rotated to bring the arcuate flange 24 mounted on the body of the fuse into interlocking relation with the retaining finger 25 mounted upon the baseboard 4. If desired, an additional holding flange 26 may be mounted upon the baseboard 4 to prevent any accidental disconnection of the fuse from its retaining clips.

The principles of the invention may also be applied with advantage to the securing of switches in circuit completing positions without possible jarring or unintentional dislodgement thereof as a result of vibrations or shocks. For example, such a switch may assume the form of a conventional knife switch which may be pivoted at one terminal thereof and which may be swung into circuit closing position by engagement of the other end thereof with a current carrying clip. The assembly movement of the switch may be followed by a supplemental independent movement to interlock the switch in closed position by instrumentalities such as rotatable sleeves of the type shown in conjunction with the fuses illustrated in Figures 8 to 11, which sleeves may encircle the switch body, or a portion thereof, and be designed with a projection adapted to interlock with a cooperating projection disposed on the switch mounting in the field of operation of the sleeve. A switch embodying the inventive feature described above is illustrated in Figure 15. The knife switch 31 is brought into the embrace of spaced spring fingers 33 and an accidental disconnection is prevented by rotating the handle body 32 which is rotatably connected with the switch body 31 to bring the arcuate retaining flange 34 on the handle 32 into engagement with the retaining finger 35 mounted upon the baseboard 4d. The handle 32 may be of solid or hollow construction.

While I have described my invention as embodied in specific forms and as operating in a specific manner for purposes of illustration, it should be understood that I do not limit my invention thereto, since various modifications will suggest themselves to those skilled in the art without departing from the spirit of my invention, the scope of which is set forth in the annexed claims.

I claim:

1. In an electric fuse mounting, a clip carried by said mounting and fashioned to receive into its embrace, a fuse entering into assembly with said clip and disassembly therefrom by a bodily movement of the fuse relatively to the clip; said fuse and mounting, while in assembly, having an interlocking movement relatively one to the other, independent of the assembly movement between them, and interlocking members carried respectively by the mounting and by the fuse and brought into and out of interlock by said independent movement, said interlocking member on the fuse comprising a semi-cylindrical extension at the extremity of the fuse and the interlocking member on the mounting comprising projections on said clip adapted to engage said extension.

2. In an electric fuse mounting, a clip carried by said mounting and fashioned to receive into its embrace, a fuse entering into assembly with said clip and disassembly therefrom by a bodily movement of the fuse relatively to the clip; said fuse and mounting, while in assembly, having an interlocking movement relatively one to the other, independent of the assembly movement between them, and interlocking members carried respectively by the mounting and by the fuse and brought into and out of interlock by said independent movement, said mounting including a flange protruding towards said fuse, and a cooperating flange on said fuse adapted to engage with said first flange in consequence of an independent rotary movement of said fuse relative to

said mounting around the longitudinal axis of said fuse.

3. In an electric fuse mounting, a clip carried by said mounting and fashioned to receive into its embrace, a fuse entering into assembly with said clip and disassembly therefrom by a bodily movement of the fuse relatively to the clip; said fuse and mounting, while in assembly, having an interlocking movement relatively one to the other, independent of the assembly movement between them, and interlocking members carried respectively by the mounting and by the fuse and brought into and out of interlock by said independent movement, said fuse comprising a rotatable sleeve provided with a projection engageable with a cooperating projection on the fuse mounting in consequence of a rotary movement of said sleeve.

4. In an electric fuse mounting, a clip carried by said mounting and fashioned to receive into its embrace, a fuse entering into assembly with said clip and disassembly therefrom by a bodily movement of the fuse relatively to the clip; said fuse and mounting, while in assembly, having an interlocking movement relatively one to the other, independent of the assembly movement between them, and interlocking members carried respectively by the mounting and by the fuse and brought into and out of interlock by said independent movement, said fuse comprising a rotatable sleeve capable of a predetermined extent of rotation and provided with a projecting flange engageable with a cooperating projecting flange on the fuse mounting in consequence of a rotary movement of said sleeve, the limits of rotation of said sleeve defining the fully interlocked position of assembly and the fully interlock-released position incident to disassembly.

5. In an electric fuse mounting, a clip carried by said mounting and fashioned to receive into its embrace, a fuse entering into assembly with said clip and disassembly therefrom by a bodily movement of the fuse relatively to the clip; said fuse and mounting, while in assembly, having an interlocking movement relatively one to the other, independent of the assembly movement between them, and interlocking members carried respectively by the mounting and by the fuse and brought into and out of interlock by said independent movement, said fuse comprising a rotatable sleeve having an angularly disposed opening therein engageable with a flanged head disposed on the fuse mounting, said sleeve and flanged-head being engageable and disengageable at the deep portion of said opening, and adapted to assume an interlocking relationship at the restricted portion of said opening in consequence of relative rotary movement between the sleeve and head.

6. In an electric circuit connection mounting, a clip carried by said mounting and fashioned to receive into its embrace, a circuit completing member entering into assembly with said clip and disassembly therefrom by a bodily movement of said member relatively to the clip with the conducting end of said circuit completing member entering into non-rotatable embrace with the clip; said member and mounting, while in assembly, having a rotary interlocking movement relatively one to the other, independent of the assembly movement between them, with the axis of said movement parallel to the longitudinal axis of said member interlocking elements carried respectively by the mounting and by said member and brought into and out of interlock by said independent movement, said circuit completing member having a body rotatable relatively to said conducting end with the interlocking element of the circuit completing member being carried by said rotatable body in the form of a protruding flange brought by rotation of the body into engagement with the interlocking element on the mounting.

7. In an electric circuit connection mounting, a clip comprising a pair of spaced spring fingers carried by said mounting and fashioned to receive into its embrace, a circuit completing member entering into assembly with said spaced spring fingers and disassembly therefrom by a bodily movement of said member relatively to the spring fingers; said member and mounting, while in assembly, having a rotary interlocking engagement between one another, which engagement is independent of the engagement resulting from the assembly engagement between them, and interlocking elements carried respectively by the mounting and by said member and brought into and out of interlock by said independent engagement, said interlocking element of the circuit completing member being in the form of a rotary flange movable around an axis substantially parallel to the longitudinal axis of said member, to effect said rotary interlocking engagement.

8. In an electric fuse mounting, a clip comprising a pair of spaced spring fingers carried by said mounting and fashioned to receive into its embrace, a fuse entering into assembly with said spring fingers and disassembly therefrom by a bodily movement of the fuse relatively to the spring fingers; said fuse and mounting, while in assembly, having a rotary interlocking engagement between one another, which engagement is independent of the engagement resulting from the assembly movement between them, and interlocking members carried respectively by the mounting and by the fuse and brought into and out of interlock by said independent movement, said interlocking member on the fuse comprising a rotary flange to effect said rotary interlocking engagement by rotary movement about the longitudinal axis of the fuse.

9. An electric fuse mounting as set forth in claim 8 wherein the fuse has a conducting end-portion through which it enters into the embrace of the spaced spring fingers, and the body of the fuse is rotatable and carries its interlocking member in position to partake of such rotation and by such rotation to move into and out of engagement with the interlocking member on the mounting.

MAX KURILLO.