Feb. 19, 1935. F. A. WONDRA 1,991,717

COMBUSTION TURBINE

Filed Aug. 24, 1931 5 Sheets-Sheet 1

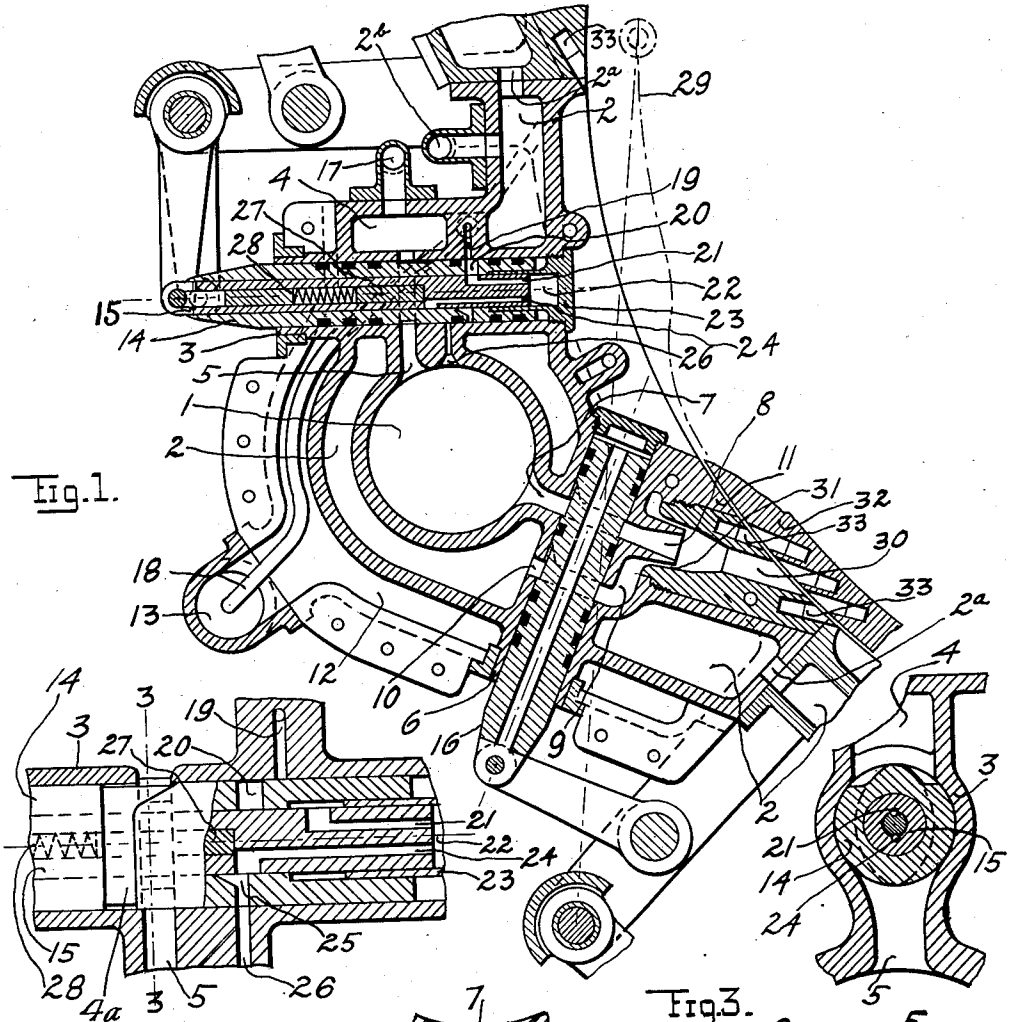

Fig. 1.

Fig. 2.

Fig. 3.

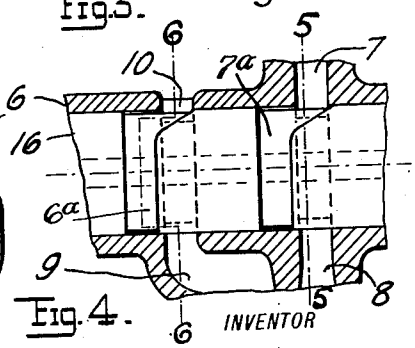

Fig. 4.

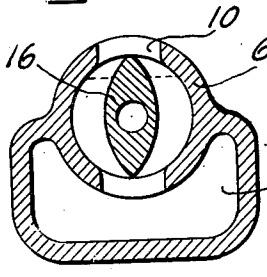

Fig. 6.

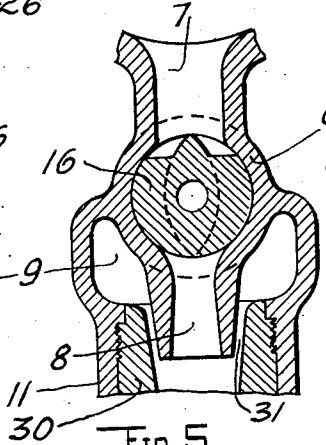

Fig. 5.

INVENTOR

Frank A. Wondra

Feb. 19, 1935. F. A. WONDRA 1,991,717

COMBUSTION TURBINE

Filed Aug. 24, 1931 5 Sheets-Sheet 2

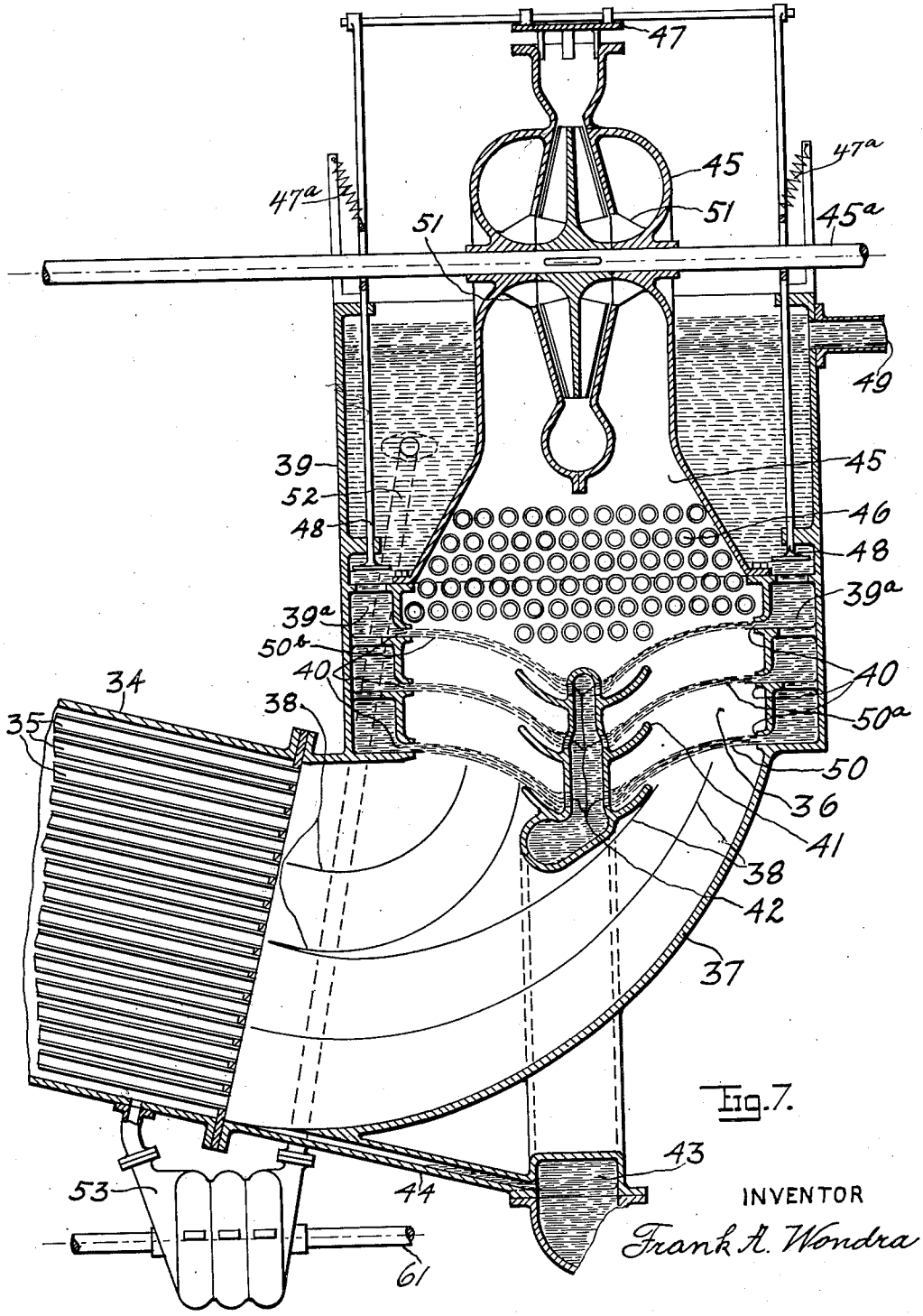

Fig. 7.

INVENTOR

Frank A. Wondra

Feb. 19, 1935. F. A. WONDRA 1,991,717

COMBUSTION TURBINE

Filed Aug. 24, 1931 5 Sheets-Sheet 3

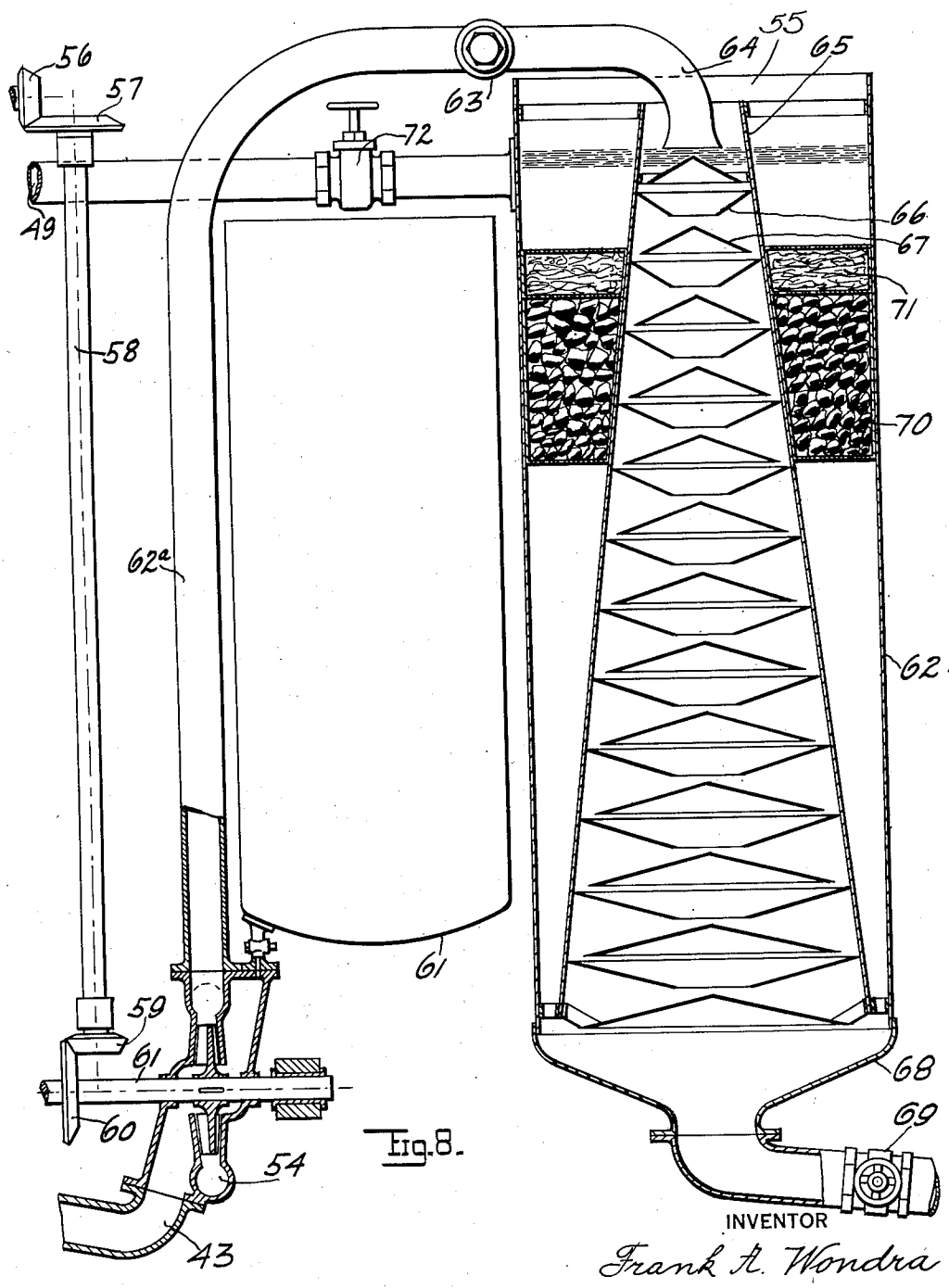

Fig. 8.

INVENTOR

Frank A. Wondra

Feb. 19, 1935. F. A. WONDRA 1,991,717

COMBUSTION TURBINE

Filed Aug. 24, 1931 5 Sheets-Sheet 4

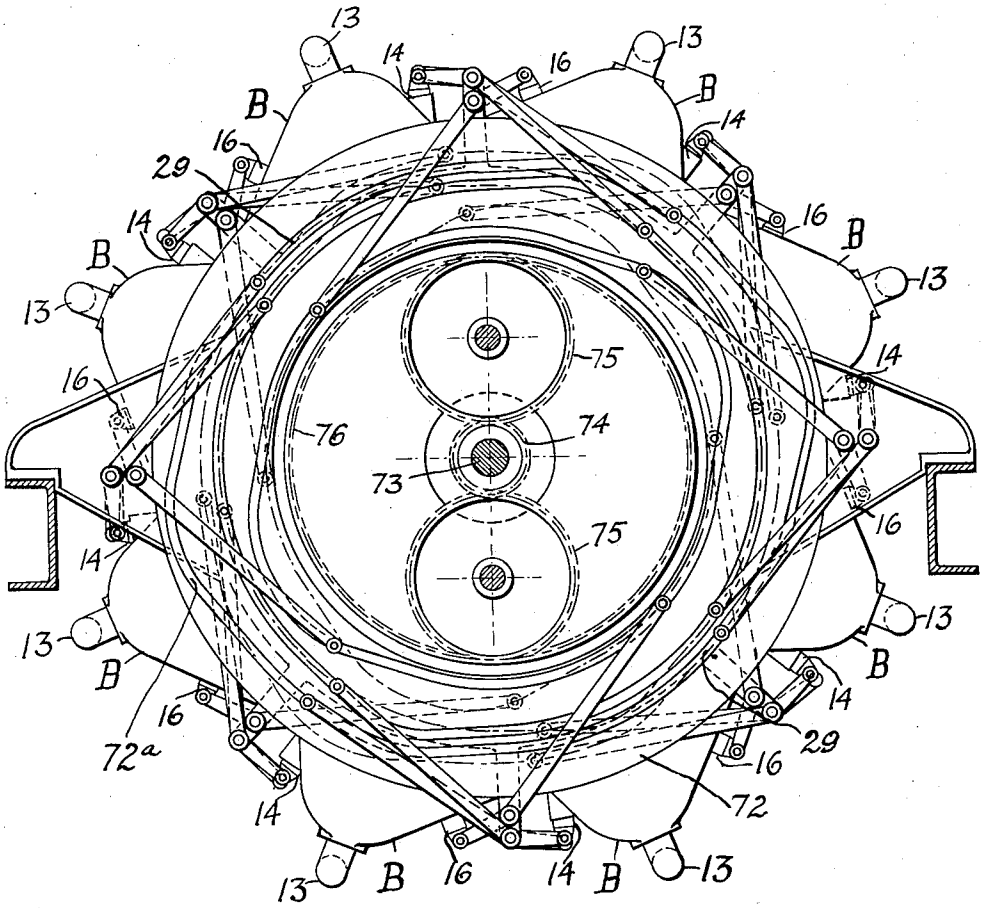

Fig. 9.

INVENTOR

Frank A. Wondra

Feb. 19, 1935. F. A. WONDRA 1,991,717

COMBUSTION TURBINE

Filed Aug. 24, 1931 5 Sheets-Sheet 5

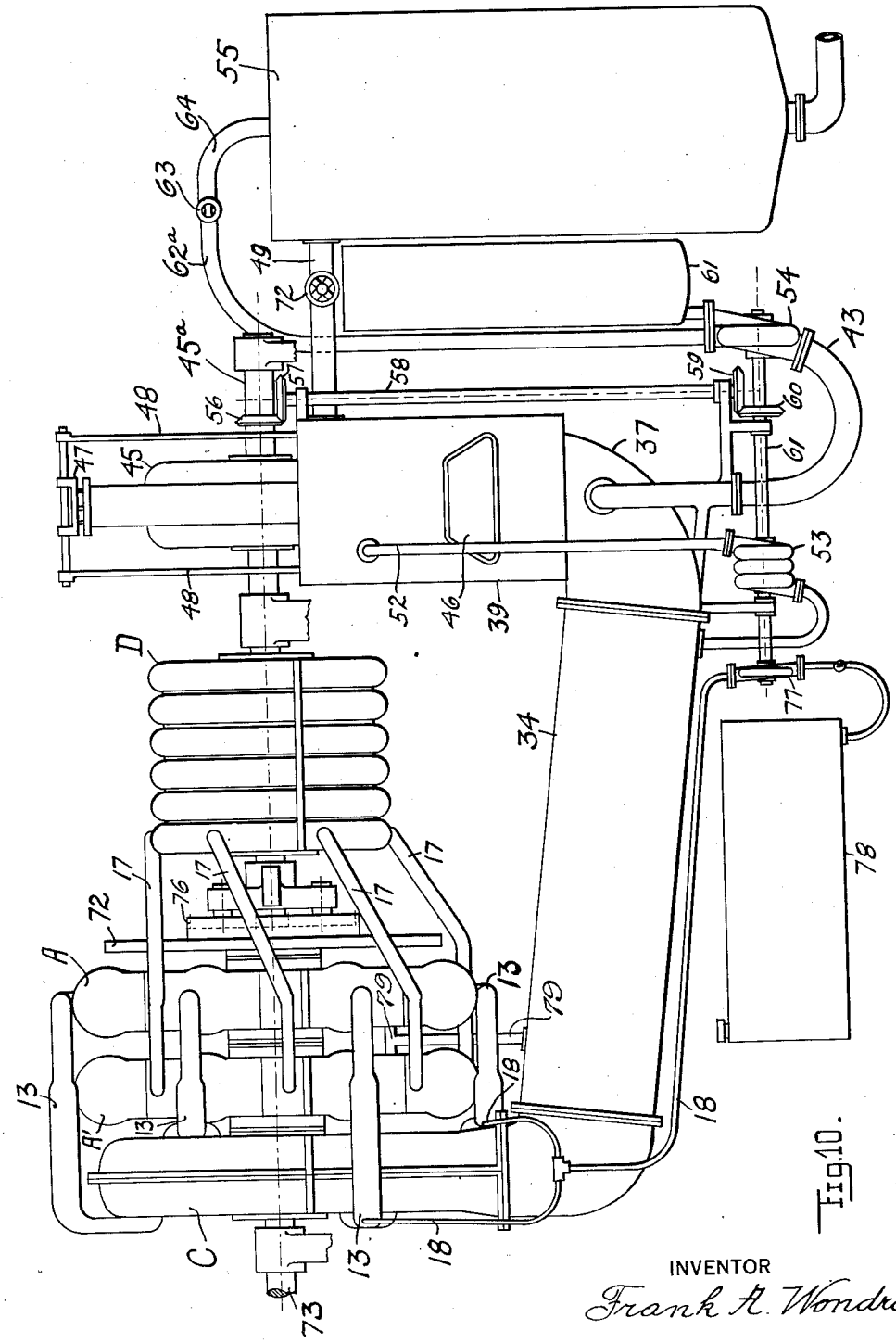

Fig. 10.

INVENTOR

Frank A. Wondra

Patented Feb. 19, 1935 1,991,717

UNITED STATES PATENT OFFICE

1,991,717

COMBUSTION TURBINE

Frank A. Wondra, Scotia, N. Y.

Application August 24, 1931, Serial No. 558,873

7 Claims. (Cl. 60—42)

My invention relates to a combustion turbine and is essentially a further improvement of my Patent No. 1,632,157. The main objects of my improvement are first: to provide balanced valves of the piston type for the fluid pressure generators, disclosed in said patent, second: to afford facilities for the proper cooling of the valves, third: to subdivide the injection of fuel for combustion into two pressure stages, fourth: to utilize the residual energy of the working fluid for kinetic compression of the exhaust gases, fifth: to purify the condensate for reutilization and sixth to retain the high grade heat energy of the gas and steam while they are mixed together.

I attain these objects by mechanism and arrangements illustrated in the accompanying drawings in which Fig. 1 is a vertical section of one of the fluid pressure generators of the character shown in my above patent, but taking 45° of the circumference so that eight generators form a circle.

Fig. 2 is an enlarged view of the air and fuel valve partly shown in section.

Fig. 3 is a section on line 3—3 of Fig. 2.

Fig. 4 is an enlarged view of the discharge valve, the valve casing being shown in section.

Fig. 5 is a section on line 5—5 of Fig. 4.

Fig. 6 is a section on line 6—6 of Fig. 4.

Fig. 7 is a section through the exhaust end of the turbine showing the regenerator, kinetic compressor and exhaustor, and Fig. 8 shows the arrangements of the purifying system of the condensate.

Fig. 9 shows the cam grooves and the valve actuation with eight fluid pressure generators in a circle. Fig. 10 shows all the elements of the turbine system in their proper relation.

There are two generator sets A and A' in the system arranged side by side and their turbine wheels are mounted upon a common shaft. Each set consists of eight fluid pressure generators B, forming a circle. The set A has the valve actuating means, which consists of a cam disk 72 driven from the turbine shaft 73 at reduced speed by gears 74, 75 and 76.

The fluid pressure generator B shown in Fig. 9 and in section in Fig. 1 consists of a spherical combustion chamber 1, surrounded by a steam jacket 2, valve casing 3 for the charging valves, an air chamber 4 with port 5 leading into the combustion chamber, a casing 6 for the discharge valve with port 7 leading from the combustion chamber and forming across the casing the gas nozzle 8, a steam chamber 9 adjacent the casing with a port 10 leading from the steam jacket, a nozzle casing 11 leading from said steam chamber into the interior of the turbine casing. All of these chambers with the respective casings and ports are cast in one piece and are surrounded by the exhaust hood 12 which is made in two halves and to which is connected the exhaust pipe 13.

The ports between the various chambers are controlled by balanced piston valves, which are operated from a cam disc, driven at constant ratio but reduced speed, by the turbine, as shown in Fig. 9.

The valve 14 controls the air inlet, valve 15 the fuel injection and valve 16 the discharge of gas and steam. The air valve and the discharge valve have streamline passages which are on the intake side widened to double the size of the port (Fig. 2) whereby the pressure in the respective chambers does not act upon the valve from one side only and is thereby balanced. The discharge valve passage controlling the gas is cooled by the inrushing air after each explosion while the combustion chamber is being charged (Figs. 4 and 5). The air valve has the passage 4^a and the discharge valve the steam passage 6^a and gas passage 7^a.

The air valve together with the fuel valve acts as a high pressure fuel pump. The air is delivered from the turbine compressor D (Fig. 10) at about 7 Atm. abs. pressure through the pipe 17 into the air chamber 4. The fuel pipe 18 is laid in the path of the primary exhaust inside the conduit 13 and the fuel (in this case oil) is held there under sufficient pressure to retain its liquid state, although it was heated to its evaporization point by the heat of the primary exhaust and enters the conduit 19 of the generator. The fuel pump 77 delivers the fuel from the tank 78 into the fuel pipes 18. The air compressor D is directly connected to the turbine shaft.

When the air valve is shifted by the action of the cam disc and levers into open position, the air rushes into the combustion chamber and at the same time the oil runs through the opening 20 of the air valve and the drilled channel 21 of the fuel valve into the reservoir 22 formed by the cup 23 and fills also the channel 24. When the air valve is shifted into the closed position it shuts off the opening 20 from the fuel conduit 19 and establishes connection between the opening 25 and conduit 26 leading into the combustion chamber. At this point the fuel valve 15 is shifted toward the cup 23 and presses the fuel which accumulated in the reservoir 22 into the air in the combustion chamber and starts spon-

taneous combustion, since the temperature in the combustion chamber is held above the igniting point of the oil.

Fig. 1 shows the air valve in charging position and Fig. 2 shows the air valve closed and the fuel valve at the end of the ignition period. From this point the air valve is shifted still further into the closed zone and covers the conduit 26 whereby the combustion pressure cannot react upon the fuel valve. Any remaining oil in the fuel valve lifts the plug 27 which is under the tension of the spring 28 and this spring presses the oil at the next filling period into the reservoir 22.

The cam groove 72^a which operates the air valve has an additional depression 29 as shown in Fig. 1 and Fig. 9 to shift the air valve still further into the closed zone and covers the fuel conduit 26. The cam disk has cam grooves on both sides which are set 45° ahead relative to each other. With eight generators it is possible to get per set four explosions simultaneously, which gives the turbine large power right at the start.

By the above described cooperation of these two concentric valves an exact and predetermined amount of fuel is injected against the air pressure in the combustion chamber without additional movable elements and a minimum of compression work. Both of the valve casings are surrounded by the steam jacket, which can be held at steady and moderate temperature even if the temperature in the combustion chamber reaches for a fraction of a second the temperature around 2600° C. Abs.

The discharge valve is shown in Fig. 1 in open position and in Fig. 4 in closed position, which shows how by widening of the streamline passage on the intake side the pressure in the respective chamber or jacket reaches around the whole passage whereby the pressure upon the valve itself is removed. Fig. 5 shows the gas valve in closed position, and Fig. 6 the steam valve in open position.

In the nozzle casing 11 is inserted the main discharge nozzle 30, the upper part of which forms in conjunction with the outer wall of the gas nozzle, the steam nozzle 31. That part of the main nozzle between the throat and the end of the gas nozzle serves for the mixing of the combustion gases and steam issuing from both nozzles. By making the area of the nozzle 30, where the steam and gases meet, constant, the high grade heat energy of the fluid is conserved.

The steam passage 6^a lets more steam into the steam chamber 9 than could be discharged through the steam nozzle 31 during the discharge and the accumulated steam cools the gas nozzle 8 during the closed period.

The turbine wheel 32 is formed of the U-shaped double buckets and the stationary reversing buckets 33 are milled right into the main nozzle, one set in front and one set behind the discharge orifice of the main nozzle to receive and return the jet against the wheel buckets for a second impulse.

The primary exhaust from one generator escapes through the exhaust hood of the generator located ahead considering the direction of rotation and is further utilized in a low pressure turbine C as shown in Fig. 10 and is expanded there to about 0.4 Atm. abs. pressure. The exhaust from the low pressure turbine which I will term secondary exhaust is further utilized for generation of steam in the regenerator 34 (Fig. 7) which has tubes 35 and where the pressure of the secondary exhaust drops to about 0.25 Atm. abs.

The secondary exhaust flowing from the regenerator contains still some available heat energy and enters into the kinetic compressor 36, which consists of a guide hood 37 bolted to the regenerator end and having guide vanes 38 for dividing and directing the flow of the exhaust, a quadrangular tank 39 having pockets 39^a extending across the whole width of the tank with a plurality of nozzles 40 spaced vertically apart, a catch-basin 41 extending also across the whole width of the tank with ducts 42 and drain channel 43 running outside the guide hood, an oblique drain pipe 44 leading from the lower part of the hood to the drain channel.

The top of the pocket frame forms the base for the exhauster 45, the lowest part of the inner casing holding the surface condenser 46.

The revolving elements of the exhauster are arranged upon the shaft 45^a which is a continuation of the compressor shaft and directly connected to the turbine shaft, as shown in Fig. 10.

In the upper portion of the scroll of the exhauster is the cover 47 slidably mounted and from which are suspended and supported the valves 48 located above the inlet of the pockets. The space in the tank around the exhauster casing is filled with water which enters through pipe 49.

The whole interior of the kinetic compressor and also all surfaces which come in contact with gases, steam or water are coated with enamel to prevent corrosion of the metal.

The working of the kinetic compressor is as follows: the exhaust flowing from the regenerator contains about 40% of steam and the rest is, when oil as fuel is used, carbon dioxide, residual air and some sulphur dioxide. The velocity of this mixture will be, due to the lower specific heat of the gases, higher than that of steam alone. As shown in Fig. 7, a plurality of jets of water 50, 50^a and 50^b are running across the path of the exhaust. The lowest jet 50 is the thickest and acts as a perfect cover over the path of the exhaust passage. When the exhaust strikes this jet with considerable velocity the steam in it will be immediately condensed and the noncondensible gases will be partly absorbed by the running water of the jet and the largest part will bubble, due to its kinetic energy, through into the space formed between jets 50 and 50^a.

Since the jet 50^a is thinner than jet 50, the gases accumulated there will follow the direction of least resistance, bubble through the jet 50^a into the space formed between the jets 50^a and 50^b and, bubbling through the last jet, pass between tubes of the surface condenser to the intake vanes 51 of the turbo-exhauster.

The gases passed through the water jets have been thoroughly cooled and their pressure increased by simultaneous decrease in volume without any mechanical energy expended. The work required to compress the gases from subatmospheric pressure to atmospheric pressure is thereby considerably reduced.

The weight of the scroll cover 47 is balanced by springs 47^a so as to close if the pressure in the scroll sinks below the atmospheric pressure, and will close at the same time as the valve 48, stopping the flow of water from the nozzles 40. The result of this will be that more steam will stay uncondensed which will increase the pressure in the scroll and the cover 47 will open again and the valves 48 again admit water into the pockets.

The water required for steam production is taken from the tank 39 by pipe 52 and delivered by the high pressure pump 53 into the regenerator wherefrom the steam is taken up by pipe 79 and admitted into the jackets of the turbine heads and piped over through pipes 2^b into the steam jackets 2 of the fluid pressure generators which are interconnected by ports 2^a so that the steam pressure will be equal in all jackets (Fig. 1).

The water formed by the combustion of the hydrogen in the fuel is added to the circulating water in the tank and compensates any losses due to evaporation, or vapor which is carried off by the expelled gases.

Where sufficient amount of cooling water is available, water is used for the surface condenser 46.

The water from the drain channel 43 is lifted by the circulating pump 54 (Fig. 8) into the settling tank 55. Said pump is driven with reduced speed from the turbine shafts by means of bevel gears 56 and 57 which in turn drive the upright shaft 58 with bevel gear 59 and gear 60 being upon the pump shaft 61 which drives also the high pressure pump 53.

The circulating pump has impeller blades on both sides of the wheel-disc and while it lifts water from one side it receives a solution of calcium hydroxide and sodium hydroxide from tank 61 for the other side and thus the solution is mixed with the water thoroughly before it is discharged into the circular settling tank 62.

There are two settling tanks in the system, but only one at a time is in operation. The feeding pipe 62^a branches off at the joint coupling 63 to each of the tanks, the discharging arms 64 are made to swing upward to stop the flow.

Each settling tank consists of a cone 65 with sets of cups 66 and covers 67 which increase in area and decrease in inclination downwardly in order to gradually decrease the flow of the condensate and settle the calcium hydroxide which absorbed the CO_2 and sodium hydroxide which absorbed the SO_2.

The slush of it settles in the bowl 68 and is removed occasionally through the valve 69.

After the condensate passes through the inside of the cone, it raises outside of it in the settling tank and passes through the charcoal container 70 for further filtration and through the excelsior container 71 where small particles still carried are detained.

Almost all the heat which still remained in the secondary exhaust is absorbed by the water and returned with the purified water again through the pipe 49 into the tank 39. When one of the settling tanks is cleaned, the valve 72 in front of it is closed. All the elements in the settling tank are made to be easily removable.

The tops of both tanks are uncovered to aid in deaeration of the water therein. The overall efficiency of this turbine will be over 48%.

What I claim as new and desire to secure by Letters Patent of the United States is:—

1. In a fluid pressure generator for combustion turbines in combination, a combustion chamber having an inlet port for air, an inlet port for fuel, separate sources of air and heated fuel under pressure in close proximity to said chamber, piston valve controlling the inlet port for air, an opening in said valve in registry with said fuel source during the admission of air and closed simultaneously with the closing of said air port, a fuel valve concentrically arranged within said piston valve, a stationary sleeve cylinder engaging both of said valves and forming a reservoir for the fuel, connecting port in said fuel valve in registry with said opening in the air valve during the admission of air for admission of fuel into said reservoir, a second opening in said air valve facing the fuel inlet of the combustion chambers and being in registry therewith at the end of the air admission period, a second connecting port in said fuel valve in registry with said second opening in said air valve at the end of the air admission period for injection of fuel from said reservoir into said combustion chamber means shifting said valves in timed relation and means shifting said air valve further into the closed zone to cover the fuel inlet of said combustion chamber during the combustion.

2. A combustion turbine comprising a plurality of fluid pressure generators for supplying the turbine with a mixture of combustion gases and steam, a turbine wheel having buckets to abstract the heat energy of the mixture to produce rotation, a regenerator receiving the exhaust of the turbine wheel for utilization in steam production, a receptacle for water having compartments provided with inlets, valves controlling the inlets, nozzles in said compartments spaced vertically apart and adapted to discharge jets of water across the path of the exhaust issuing from the regenerator, to condense the steam and compress the gases of said exhaust.

3. A combustion turbine comprising a plurality of fluid pressure generators for supplying the turbine with mixture of combustion gases and steam, a turbine wheel having buckets to abstract the heat energy of the mixture to produce rotation, a regenerator receiving the exhaust of the turbine wheel, a receptacle for water receiving the exhaust from said regenerator to condense the steam of the exhaust, a container with a solution of sodium hydroxide and calcium hydroxide, a settling tank, a pump receiving the water from said receptacle and admixing said solution to the water and discharging it into the settling tank for clarification, a conduit returning the clarified water into said receptacle and means conveying water from said receptacle into said regenerator for generation of steam.

4. In a combustion turbine comprising a plurality of fluid pressure generators for supplying the turbine with mixture of combustion gases and steam, a turbine wheel having buckets to abstract the heat energy of the mixture to produce rotation, a regenerator receiving the exhaust of the turbine wheel, a receptacle for water receiving the exhaust from said regenerator to condense the steam of the exhaust, a container with liquid treating chemicals, a settling tank, a pump receiving simultaneously water from said receptacle and said chemicals and discharging into the settling tank, a conduit returning the clarified water into said receptacle and means conveying water from said receptacle into said regenerator for generation of steam.

5. A combustion turbine comprising a plurality of fluid pressure generators producing intermittently charges of gas and steam mixture, a plurality of turbine wheel buckets to abstract the energy of the mixture to produce rotation, a regenerator receiving the exhaust of said buckets for utilization in steam production, a gas and liquid separator receiving the exhaust from said regenerator and having nozzles discharging water across the path of said exhaust to condense the steam, means for draining off the condensate from said separator and an exhauster

exhausting the gases from said separator against the atmosphere.

6. In a combustion turbine a fluid pressure generator for supplying the turbine with vapor energy and comprising a combustion chamber with separate inlets for fuel and air and a discharge port terminating into a gas nozzle, pressure balanced piston valves controlling said inlets, a steam jacket surrounding the combustion chamber and having an inlet for steam and an outlet port, a steam chamber surrounded by said steam jacket and having an inlet port and a steam nozzle, a pressure balanced piston valve controlling said ports, in combination of a turbine wheel with buckets thereon, a main nozzle receiving gas from said gas nozzle and steam from said steam nozzle and discharging the mixture against the buckets of the wheel to produce rotation, reversing buckets receiving the gas-steam mixture from said bucket wheel and discharging it against the buckets of the wheel a second time, an exhaust hood surrounding said steam jacket and conveying the exhaust of the turbine wheel around said steam jacket, a plurality of turbine wheels with buckets to further abstract the energy of the mixture, a regenerator receiving the exhaust of said buckets for utilization in steam production, a plurality of guide vanes directing the exhaust from said regenerator upwardly, a gas and liquid separator receiving the exhaust from said guide vanes and having nozzles discharging water across the path of said exhaust to condense the steam and compress the gases of said exhaust, cooler elements arranged above said nozzles, means for draining off the condensate and an exhauster exhausting the gases from said separator against the atmosphere.

7. In a combustion turbine a fluid pressure generator for supplying the turbine with vapor energy and comprising a combustion chamber with separate inlets for fuel and air and a discharge port terminating into a gas nozzle, pressure balanced piston valves controlling said inlets, a steam jacket surrounding the combustion chamber and having an inlet for steam and an outlet port, a steam chamber surrounded by said steam jacket and having an inlet port and a steam nozzle, a pressure balanced piston valve controlling said ports, in combination of a turbine wheel with buckets thereon, a main nozzle receiving gas from said gas nozzle and steam from said steam nozzle and discharging the mixture against the buckets of the wheel to produce rotation, reversing buckets receiving the gas-steam mixture from said bucket wheel and discharging it against the buckets of the wheel a second time, an exhaust hood surrounding said steam jacket and conveying the exhaust of the turbine wheel around said steam jacket, a plurality of turbine wheels with buckets to further abstract the energy of the mixture, a regenerator receiving the exhaust of said buckets for utilization in steam production, a plurality of guide vanes directing the exhaust from said regenerator upwardly, a receptacle for water having compartments provided with inlets, valves controlling the inlets, nozzles in said compartments spaced vertically apart and adapted to discharge jets of water across the path of the exhaust issuing from the regenerator to condense the steam and compress the gases of said exhaust, an exhauster having a suction port extending between said compartments and an outlet port, cooler elements arranged above said nozzles, a cover slidably mounted in said outlet port and connecting links between said cover and said valves to control the pressure in the outlet port.

FRANK A. WONDRA.