(No Model.)

W. DE C. MAY.

DEVICE FOR COOLING THE CYLINDERS OF COMPRESSORS FOR AIR AND OTHER GASES.

No. 354,563. Patented Dec. 21, 1886.

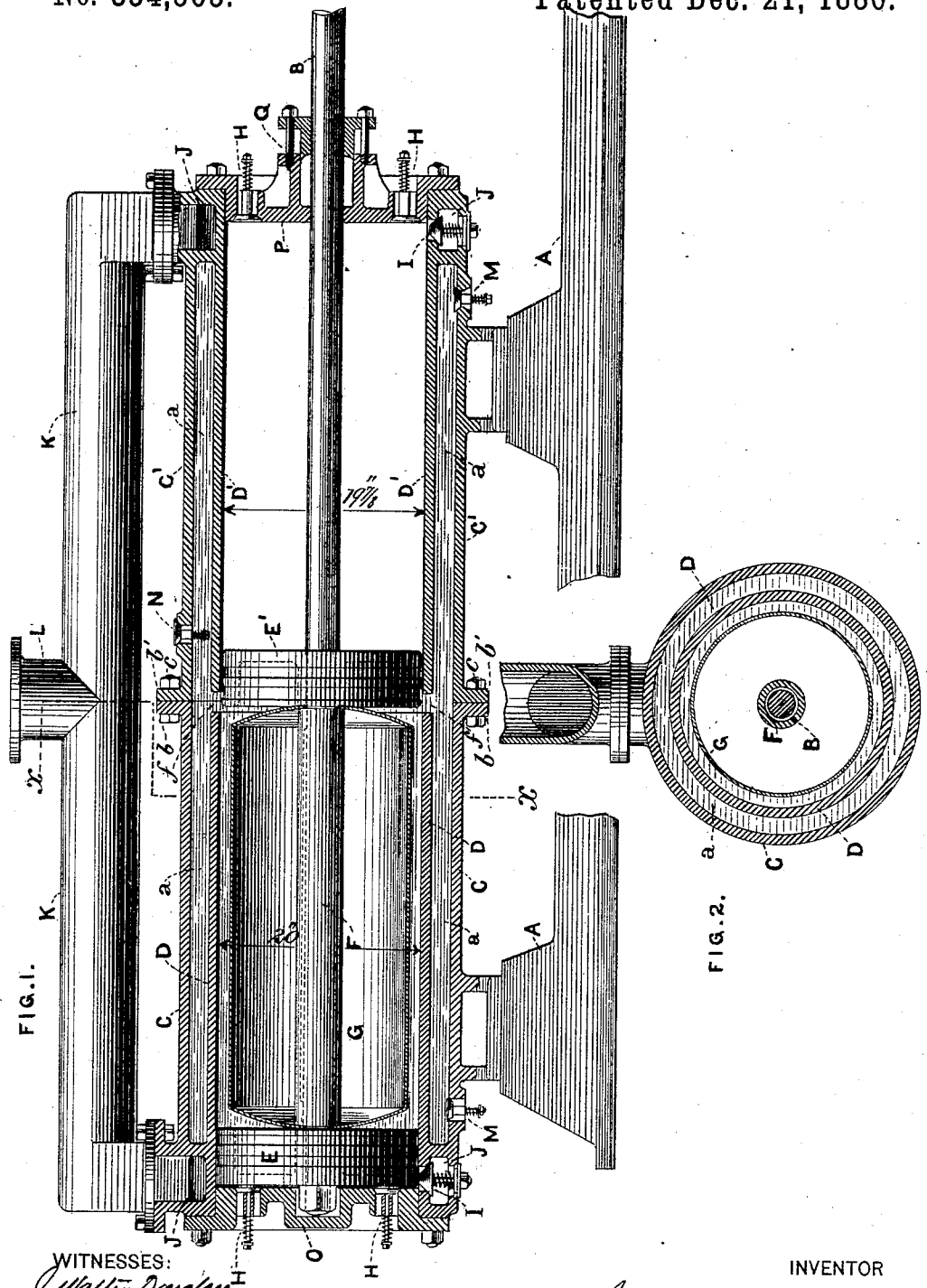

WITNESSES:

J. Walter Douglass

Thomas M. Smith.

INVENTOR

William De Courcy May

By W. C. Maley

attorney

N. PETERS, Photo-Lithographer, Washington, D. C.

UNITED STATES PATENT OFFICE.

WILLIAM DE COURCY MAY, OF PHILADELPHIA, PENNSYLVANIA.

DEVICE FOR COOLING THE CYLINDERS OF COMPRESSORS FOR AIR AND OTHER GASES.

SPECIFICATION forming part of Letters Patent No. 354,563, dated December 21, 1886.

Application filed June 3, 1884. Serial No. 133,665. (No model.)

To all whom it may concern:

Be it known that I, WILLIAM DE COURCY MAY, of the city and county of Philadelphia, in the State of Pennsylvania, have invented certain new and useful Improvements in Devices for Cooling the Cylinders of Compressors for Air and other Gases.

The following is a specification of my said invention, reference being had to the accompanying drawings, wherein Figure 1 represents a central longitudinal section through the compression-cylinder, and Fig. 2 a transverse section through the same on the line *x x* of Fig. 1.

It is well known that in the operation of compressing air and other gases by means of a piston working in a cylinder heat is evolved with great rapidity and in such quantity as to injuriously affect the working parts of the compressor, especially the piston-packing; and, further, the compressed air or other gas being delivered by the compresser at a very high temperature suffers a diminution in volume by cooling down to the temperature of the surrounding atmosphere after leaving the compressor. The advantage of keeping the compression-cylinder and all of its parts cool is therefore obvious: First, by keeping all the working parts in such a condition as to enable the machine to be driven at a much higher rate of speed, thereby increasing its capacity; second, by delivering the compressed air or other gas at a temperature so low that it will not suffer any shrinkage in volume by cooling after leaving the compressor, thus again increasing the capacity of the compressor without any additional power.

Various devices have been heretofore resorted to in order to cool the parts exposed to this overheating, a water-jacket surrounding the cylinder being the most ordinary expedient. This, however, is an imperfect method, since the water is only in contact with the exterior of the cylinder; hence the cooling action is limited by the conducting power of the metal which forms the cylinder, and as the inner surface is never directly cooled the packing of the piston which is in contact therewith, and is the part most liable to injury from the heat, derives little benefit from the extraneous cooling. Attempts have been made to cool the inner surfaces of the cylinder by means of a spray or jet of water injected directly into the interior of the cylinder after each stroke of the piston, the water being necessarily in the devices used admitted into that portion of the cylinder which the air to be compressed was also entering. In such case, however, the compressor delivers the air or other gas charged with moisture. The cold caused by the expansion of the compressed air or gas when in use freezes this suspended moisture, which chokes up the valves, outlets, &c., of the appliance in which it is used. These and other objections to the use of moist air or gas under compression are well understood and recognized as in many cases prohibitory.

The object of my invention is to provide a means of cooling the piston and the interior of the cylinder by direct contact with water admitted after each stroke of the piston, no water, however, being allowed to reach the air which is to be compressed, and means being provided for constantly changing the water. I thus maintain the parts at a proper temperature without in any way adding to the moisture of the air.

In the accompanying drawings, A represents the bed-plate or support of the cylinder, which is preferably mounted in a horizontal position, as shown; and B is the piston-rod, driven in the ordinary manner.

The cylinder itself I prefer to cast in two parts, each of which constitutes one longitudinal half thereof. These parts consist of outer cylindrical shells or casings, C C′, and inner ones, D D′, concentric therewith, an open space, *a*, being left between them. The inner shells, D D′, are slightly shorter than the outer ones, which latter terminate in flanges *b b′*, and when the two parts are united, as shown in Fig. 1, by means of bolts *c*, passing through the flanges *b b′*, the outer shells, C C′, form a continuous cylindrical casing, while the inner shells, D D′, have a central annular opening, *f*, between their adjacent ends, by means of which opening the interior of the cylinder communicates freely with the open space between the two concentric shells.

The cylinder thus formed is somewhat more than twice the length of the stroke of the piston, and for a purpose to be hereinafter explained. I make the internal diameter of one inner shell, D′, slightly less than that of the other inner shell, D. The amount of this dif-

ference in diameters need be but slight when the cubical capacity is considerable. Thus where the diameter of the shell D is twenty inches, the diameter of the smaller shell, D′, should be nineteen and seven-eighth inches.

The piston-rod B is provided with two pistons, E E′, separated by a distance-piece, F, which surrounds the rod, and between the two pistons there is mounted upon the piston-rod an air-tight compartment, G, of thin metal, whose external diameter is considerably less than the internal diameter of the shells D D′. The pistons E E′ are constructed and provided with packing in the ordinary manner.

In each head of the cylinder are air-inlet valves H, opening directly into the compression-chamber, and outlet-valves I, which lead from said chamber into the annular ducts J, which surround each end of the cylinder and communicate with the branches K of eduction-pipe L.

The space *a* between the two concentric shells of the cylinder communicates, by means of inlet-valves M, with a water-supply, and is also provided with an outlet-valve, N, preferably placed at or near the longitudinal center of the cylinder. The cylinder-heads O P may be constructed and applied in the ordinary manner, and a stuffing-box, Q, is provided for the piston-rod B to pass through.

The operation of the device is as follows: The space *a* between the two concentric shells of the cylinder being filled with cold water admitted by the inlet-valves M, the water flows through the annular channel *f* into the space between the two pistons. The greater part of this space, however, is occupied by the air-tight chamber G, which thus not only obviates the necessity of displacing the whole volume of water, which otherwise would fill the space, but buoys up the pistons and rod. It will be seen that when the pistons are at the end of their stroke in one direction, as shown in Fig. 1, the whole interior of the inner shell, D, and the backs of the pistons E E′ are in contact with the water which surrounds the compartment or chamber G. As the piston-rod moves on the return-stroke the water is forced by the piston E out of the shell D, and follows the piston E′ as the latter recedes, thus coming in contact with the whole interior of the shell D′; but as the interior capacity of this shell D′ is (owing to its smaller diameter) somewhat less than that of the shell D, a certain amount of the water is forced out through the annular opening *f* and escapes through the outlet-valve N. On the next stroke of the pistons the water is again forced into the interior of the shell D, and as the volume of the water is not sufficient to fill this shell, the pistons act as a pump and draw in the necessary amount through the valves M, thus introducing fresh cold water into the circulation. The surplus is again forced out by a repetition of the operation previously described, and thus the action of the differential pistons E E and shells D D′ keeps a constant flow of water through the apparatus. It will be observed that while the whole interior and exterior surfaces of the shells D D′ are immersed directly in the water at each succeeding stroke of the pistons, and while one side of the pistons themselves is constantly in contact with the water, the latter cannot pass to the other side of the piston, and no moisture can enter the compression-chamber and the air is kept dry. The air or other gas to be compressed is drawn in through the inlet-valves H in the heads of the cylinder, and on the return-stroke the compressed air or gas is discharged through the outlet-valves I in the annular ducts J, and from thence through the branch pipes K to the eduction-pipe L.

The volume of water between the two pistons in the compression-cylinder, besides keeping the cylinder cool, as described, serves another useful purpose. In the case of the compressor being driven direct by a steam-engine—*i. e.*, the piston-rod of the engine being attached to that of the compressor—the volume of water between the two pistons in the latter adds momentum to the reciprocating parts without any material increase of friction, (except that of the water against the walls of the cylinder,) and without augmenting the wear of the working parts. Thus the weight of the reciprocating parts (which may be increased to any extent by this method) absorbs the surplus power of the steam-piston at the beginning of the stroke, and uses this energy in compressing the air or gas toward the end of the stroke, when by reason of the expansion of the steam the power of the steam-piston is less than the work to be done in the compressing-cylinder.

This method of adding momentum to the reciprocating parts without increase of friction or wear permits a great reduction of the weight of fly-wheel necessary and allows greater expansion of steam to be used, and, furthermore, enhances the smoothness and regularity of working of the machine.

I am aware that heretofore a pair of working-cylinders—one within the other—has been used in an air-compressor, and that in such case the inner cylinder, as well as the outer one, was provided with a water-jacket, which operated to some extent to cool the inside of the outer cylinder; but in such case no means were provided for changing the water, nor did the inner cylinder operate to buoy up the pistons or substantially lessen the resistance to be overcome, both of which results are effected by my device.

Having thus described my invention, what I claim as new, and desire to secure by Letters Patent, is—

1. The combination, with the compression-cylinder having at or near its longitudinal center a water-inlet and a water-supply communicating therewith, of a pair of pistons arranged one on each side of said inlet, and a closed air-tight vessel arranged between the pistons, substantially in the manner and for the purposes described.

2. The combination of the compression-cylinder divided longitudinally in two compartments of different diameters, and having an aperture leading into the interior between said compartments, and a water-supply communicating with said aperture, of differential pistons adapted to the respective compartments, and inlet and outlet valves controlling the admission and discharge of water to and from the interior, substantially in the manner set forth.

WILLIAM DE COURCY MAY.

Witnesses:
CHARLES F. ZIEGLER,
J. WALTER DOUGLASS.