Dec. 17, 1968 D. GIA-QUINTO 3,416,817

PAGE MARKER AND HOLDER

Filed May 24, 1967 2 Sheets-Sheet 1

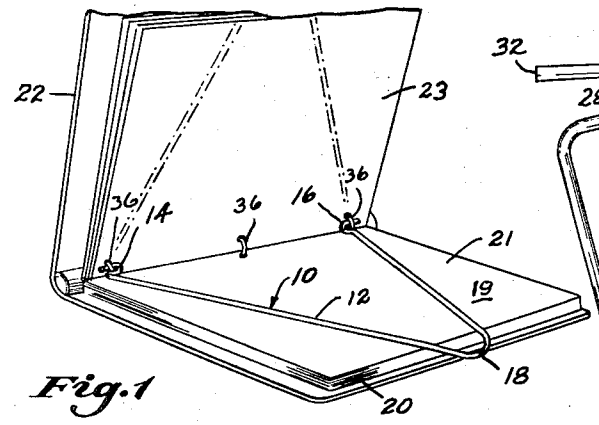

Fig. 1

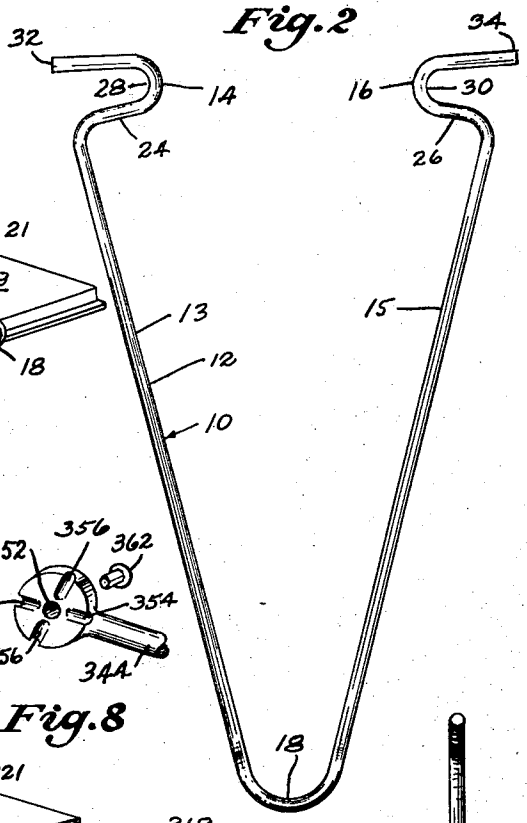

Fig. 2

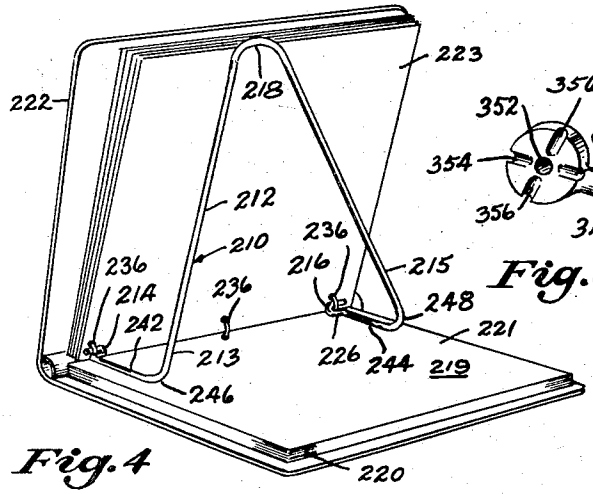

Fig. 4

Fig. 8

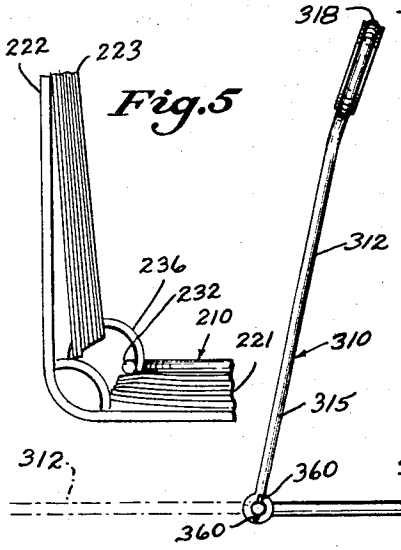

Fig. 6

Fig. 7

Fig. 5



Fig. 3

Dec. 17, 1968 D. GIA-QUINTO 3,416,817

PAGE MARKER AND HOLDER

Filed May 24, 1967 2 Sheets-Sheet 2

FIG. 9.

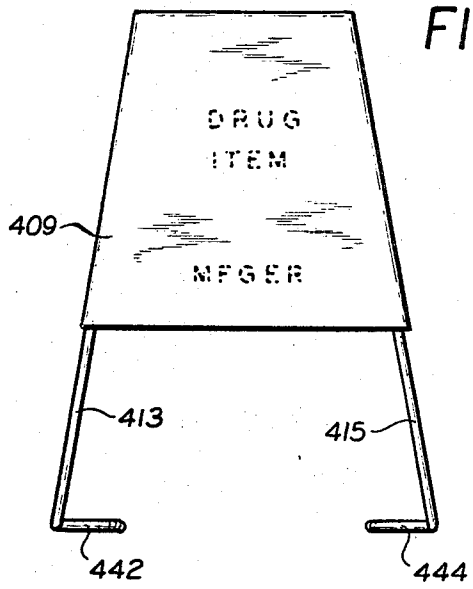

FIG. 10.

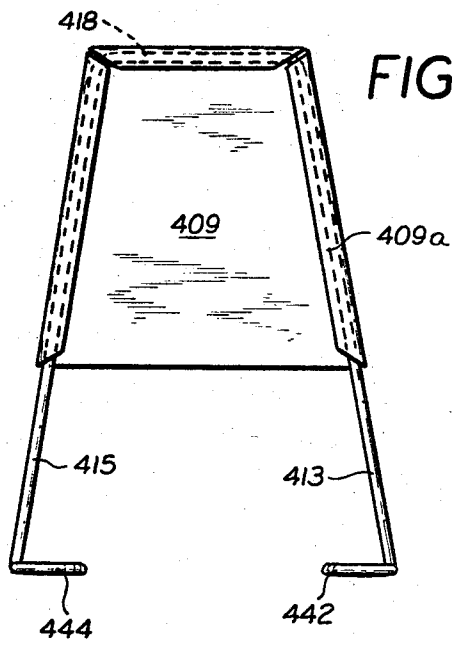

INVENTOR
DANIEL GIA-QUINTO

BY James M. Heilman

ATTORNEY.

United States Patent Office 3,416,817
Patented Dec. 17, 1968

3,416,817

PAGE MARKER AND HOLDER

Daniel Gia-Quinto, 4 Rosemere Ave., Rye, N.Y. 10580

Filed May 24, 1967, Ser. No. 640,877
3 Claims. (Cl. 281—42)

ABSTRACT OF THE DISCLOSURE

This invention has to do with a combined page marker and upright inwardly directed supporting legs which will hold a page of a looseleaf book at nearly right angles to an adjacent page whereby a clear, unobstructed view may be had of the adjacent exposed pages.

This application is an improvement on application Ser. No. 112,481, filed Apr. 7, 1961, abandoned before filing the present application.

This invention relates generally to book page markers and holders, and more particularly to improved structure providing a clear, unobstructed view especially useful in connection with holding papers of a book at nearly right angles to adjacent pages and in which ring-like members are used for temporarily or permanently binding the pages thereof.

In many fields, detailed records may be kept on separate pages which are bound in a ring book to which repeated reference may be required at a later time. Thus, for example, in bookkeeping systems where certain accounts require frequent entries or postings, the present invention enables quick and convenient return to such predetermined pages. Another example is in the field of pharmacy, where it promotes efficiency and accuracy if the pharmacist can return to a prescription which he has previously filled and which now requires refilling. This is particularly advantageous if the book is maintained in an open condition at the place of the desired prescription, so that the pharmacist may refer to the same, as he is filling the prescription, without touching the book or the page carrying the prescription.

It is therefore among the objects of the present invention to provide devices of the character described which will be efficient, convenient, easy to use, and low in cost, so that they may have a wide distribution and use, and be a valuable advertising device for drug manufacturers and other manufacturers. Another object is to provide upwardly and inwardly extending arms to provide a maximum of clear, unobstructed view of both adjacent pages.

These objects, and other incidental ends and advantages, will more fully appear in this disclosure and in the appended claims, and in obvious modifications thereof.

In the drawings, in which similar reference characters designate corresponding parts throughout the several views of each embodiment:

FIGURE 1 is a fragmentary perspective view showing a first embodiment of the invention in use on a book.

FIGURE 2 is a plan view of the device removed from the book of FIGURE 1.

FIGURE 3 is a side elevational view as seen from the right of FIGURE 2.

FIGURE 4 is a view in perspective showing a second embodiment of the invention in use.

FIGURE 5 is an enlarged fragmentary detail elevational view as seen from the left of FIGURE 4.

FIGURE 6 is a front elevational view of a third embodiment of the invention.

FIGURE 7 is a side elevational view of FIGURE 6 as seen from the right thereof.

FIGURE 8 is an enlarged fragmentary detail perspective view of structure in the lower portion of FIGURE 7.

FIGURE 9 is an enlarged front view of a device somewhat similar to the modification shown in FIGURE 4, but a squared off top to carry an advertising plate.

FIGURE 10 is a rear view of the modification illustrated in FIGURE 9.

Turning now to the first embodiment of the invention, illustrated in FIGURES 1 to 3, inclusive, the device, generally indicated by reference character **10**, comprises boardly a bow or leg element **12** and a pair of ring engaging elements **14** and **16**.

The bow element and the ring-engaging elements are preferably formed by a bent piece of wire which is stiff but resilient. Examples of the material of which the wire may be composed are steel, brass, or synthetic resin. The bow element **12**, while shown as being of generally V-shaped configuration, may take on another configuration, as, for example, a U-shaped one as illustrated in FIGURES 9 and 10. In the form shown, however, the bow element **12** requires a minimum of material in order to provide at its apex the combined handle and indicating member **18**. The handle **18** is preferably located at a distance from the ring engaging elements **14** and **16** sufficient to have the combined handle and indicating member project beyond the edges **20** of the pages **21** of the book **22**.

The ring engaging spring elements **14** and **16** are preferably hook-shaped as best seen in FIGURE 2, and may include the inwardly offset portions **24** and **26**, the bight portions **28** and **30**, and the outwardly directed terminals **32** and **34**. The bight portions **28** and **30** are sufficiently indented so that when engaged upon the ring **36** of a book **22** they will not become accidentally dislodged.

While, as manufactured, the device **10** may, for example, have the configuration and angularity shown in FIGURE 2, the angle of the bow element between the legs **13** and **15** thereof may be altered by the user by pulling them apart or pushing them together, taking care, however, to exceed the elastic limit but not to exceed the fracture point of the material of which the device **10** is composed. Normally, the angle between the legs **13** and **15** should be such that the distance between the outer surfaces of the bights **28** and **30** shall be slightly greater than the inter ring spacing of the rings **36**.

In use, the book **22** is opened to a desired page, and the legs **13** and **15** of the device **10** are compressed between the fingers and thumb of the user's other hand and so placed between the rings **36** that upon release of pressure on the legs **13** and **15**, the device **10** will expand so that the bights **28** and **30** will engage the rings. Now the book **22** may be closed, and since the member **18** will project beyond the pages **21**, it becomes a simple matter to grasp the combined handle and indicating member **18** and raise the same or move the same about an

axis passing through the rings **36**, to swing the book open to the desired page. Assuming that the legs **13** and **15** overlie the surface **19** of the exposed page, the device **10** may be pivoted upwardly to take the position shown by the dot-dash lines in FIGURE 1 so as to remove any obstruction to legibility and at the same time to keep the pages **23** out of the way. While shown as partially opened, of course the book may be fully opened through 180°.

For the purpose of avoiding needless repetition corresponding parts in the second embodiment are given the same basic reference characters plus the addition of the prefix "2."

The second embodiment differs from the first one principally in the provision that the feet **242** and **244** which are angularly disposed with respect to the legs **213** and **215**, are connected by the angle portions **246** and **248**.

This construction enables use of a book in a partially opened position (thereby using a full and unruly book, and also saving space on a counter or work-surface, for example). With the feet **242** and **244** resting on the page **221** that is desired to be read, the combination handle and indicating member **218** will act to support the pages **223** and to hold them out of the way nearly at a right angle so that the page **221** is easy to see even when the druggist is standing while working.

This is an important feature of my invention. The ability to read the lower page because the upper page is raised nearly to or slightly exceeding a right angle and preferably between 70°–80°, and the additional constructional feature that the feet rest upon the margin of the lower page while the upstanding legs provide a clear unobstructed view of the lower page. Likewise, due to the space between the upstanding legs and the upper page (see FIGURE 5) except at the upper unused margin, the druggist, by merely tilting his head, may easily read this page. Hence, two pages are completely exposed to even a standing operator.

It may be noted that in the first embodiment the book may be closed with the device **10** left in place, while this is not true of the device **210**. Thus, the second embodiment is most useful where it is desired to mark a place in a ring book which has just been selected, and to keep the book open while a selected page is being used.

Turning now to the third embodiment of the invention, illustrated in FIGURES 6 to 8, here again for the purpose of avoiding needless repetition certain of the parts corresponding to those of the prior described embodiments are given the same reference characters with the prefix "3."

The third embodiment differs from the prior embodiments in two principal respects. First, it combines the features of the first and second embodiments in that the device **310** may either be in a substantially flat condition, like the first embodiment, or may be in an erected position, like the second embodiment. When the device **310** is in flattened condition, it acts as a book mark or index, and may be permanently left in the book if desired. Also, it may be used to swing the book about its hinge to open the same at the desired place. When it is desired to use the device **310** to hold the book in an open position, the bow element **312** is swung about the hinges **311** until the bow element moves from its original flat position (dot-dash lines on FIGURE 7) to the full lines shown in FIGURE 7. In its erected position, the bow element **312** will take a position comparable to that of the bow element **212** in FIGURE 4.

The hinges **311** may be of suitable construction, and I have illustrated one form thereof in FIGURES 6 to 8. Here the hinge ends of feet **342** and **344** are flat and have openings **352** and sets of grooves or depressions **354** and **356**, while the opposite ends form ring engaging elements **314** and **316**. (See FIG. 6.)

The lower free ends of the bow element **312**, that is to say the lower terminals of the legs **313** and **315**, are preferably similarly flattened and provided with orifices which are adapted to coincide in assembled position with the orifices **352**. The inner surfaces of the lower ends of the legs **315** and **313** are provided with inwardly disposed projections or protuberances **360** which are adapted to selectively seat in the sets of depressions **354** or **356**. Each of the hinges is held in assembled condition by a rivet **362**.

Thus, since the hinges are of sufficient resiliency to allow distortion or deflection as the parts are rotated about the rivet **362**, the device **310** may have a snap action alternating between the position shown by the dot-dash lines in FIGURE 7 or the full lines thereof.

The third embodiment also differs from the prior embodiments in the incorporation of an indicia or advertising means **309**. This is preferably in the form of a button or any geometrical shape having an annular groove adapted to be retained by the uppermost loop of the bow element. **312**. This device by the means **309** may therefore carry advertising or any other information.

In connection with the fourth embodiment, illustrated in FIGURES 9 and 10, this modification is generally similar to FIGURE 4 but feet **442** and **444** are connected to upright legs **413** and **415** to form a wide see-through area until they are connected together at the margin of the page by upper leg **418**. If desired, a plastic or metal advertising plaque or banner **409**, having flanges **409*a***, and carrying the name of a drug product and manufacturer, caduceus or other symbol may be used.

It is understood that the invention is not limited to the precise details of structure shown and set forth in this specification. Obvious modifications will occur to those skilled in the art to which the invention pertains.

The embodiments of the invention in which an exclusive property or privilege is claimed are defined as follows:

1. For use with a book having a plurality of loose pages bound with at least two rings, a page marker and holder construction comprising a resilient bow element having a pair of legs and a pair of ring-engaging elements, said legs generally substantially vertically disposed, a pair of hinged angle portions, and a pair of feet, said feet being connected to ends of said legs by said angle portions, and extending horizontally; each of said hinged angle portions including two members hinged to each other and having cooperating projections and recesses whereby said projections will seat in said recesses at predetermined spots to maintain angular relationships between said legs and said feet, of approximately 90° or to maintain said legs and feet substantially coplanar, said ring engaging elements formed on said feet at the outer free ends thereof; said legs of said bow element extending upwardly and inwardly toward a narrow apex; said bow element having a combination handle and advertising member at the juncture of the upper ends of said legs whereby with the ring engaging elements engaged upon said ring members of the book and the feet resting on the page that is desired to be read, the combination handle and indicating member acts to support some of the pages to hold them up out of the way so that the said desired page may be read while the hands of the operator carry out the instructions contained on the exposed page.

2. A page marker and holder construction as set forth in claim **1** wherein said ring engaging elements are hook shaped and include inwardly offset portions, bight portions, and outwardly directed terminals, and said combination handle and advertising member is at the upper juncture of said legs toward a narrow apex to provide an unobstructed view of both adjacent pages.

3. In a book marker and advertising device as set forth in claim **1**, the angle generally between said legs and said feet being in the range of 70° to 90°, and wherein the

legs throughout most of their length are spaced from the pages of the book which are supported thereby so that writings on said pages may be read.

References Cited

UNITED STATES PATENTS

764,299	7/1904	Marsh	129—15
1,273,038	7/1918	Crowell	281—42
1,495,016	5/1924	Gardner	129—26
1,712,137	5/1929	Curti	281—42
1,744,462	1/1930	Friel	281—42

2,273,187	2/1942	Godvin et al.	129—4
2,565,966	8/1951	Jaffin	281—42

FOREIGN PATENTS

31,167	8/1904	Switzerland.

JEROME SCHNALL, *Primary Examiner.*

U.S. Cl. X.R.

129—1