United States Patent [19]

Miller

[11] **Des. 264,689**

[45] ** **Jun. 1, 1982**

[54] **BAG FASTENER OR THE LIKE**

[76] Inventor: **David L. Miller,** 18424 Domino St., Reseda, Calif. 91335

[**] Term: **14 Years**

[21] Appl. No.: **90,928**

[22] Filed: **Nov. 5, 1979**

[51] **Int. Cl.** ..... **D09—07**
[52] **U.S. Cl.** **D9/434**
[58] **Field of Search** ..... D9/434, 499; 150/3, 150/6; 229/62, 65; 24/30.5 R, 67.7

[56] **References Cited**

U.S. PATENT DOCUMENTS

285,908	10/1883	Ludington	24/30.5 R
1,459,735	6/1923	Kraft	24/30.5 R
3,036,506	5/1962	Anderesen, Jr.	24/30.5 R
3,266,711	8/1966	Song	24/30.5 R
3,827,472	8/1974	Uramoto	150/3

FOREIGN PATENT DOCUMENTS

2609	of 1872	United Kingdom	150/6

Primary Examiner—Joel Stearman
Assistant Examiner—Carmen H. Vales
Attorney, Agent, or Firm—Donald M. Cislo

[57] **CLAIM**

The ornamental design for bag fastener or the like, as shown and described.

DESCRIPTION

FIG. **1** is a perspective view of a bag fastener or the like showing my new design, the broken line showing of a bag being for illustrative purposes only;
FIG. **2** is a front elevational view thereof, the rear elevational view being a mirror image thereof;
FIG. **3** is a top plan view thereof;
FIG. **4** is a bottom plan view thereof;
FIG. **5** is a left hand elevational view thereof;
FIG. **6** is a right hand elevational view thereof; and
FIG. **7** is a sectional view taken along the line 7—7 of FIG. **2.**

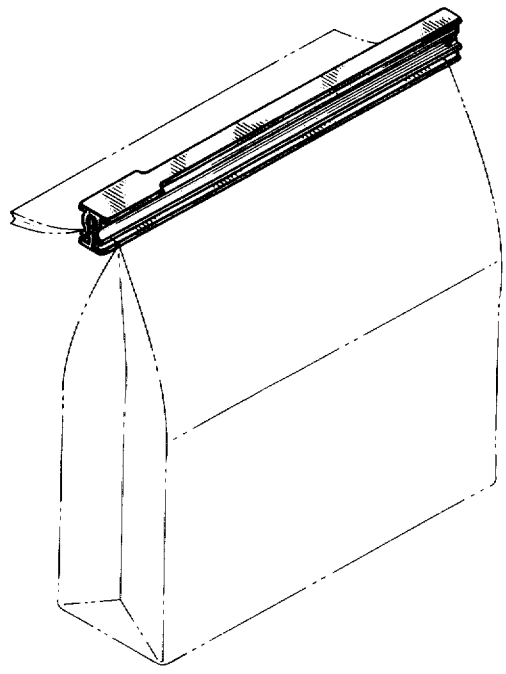

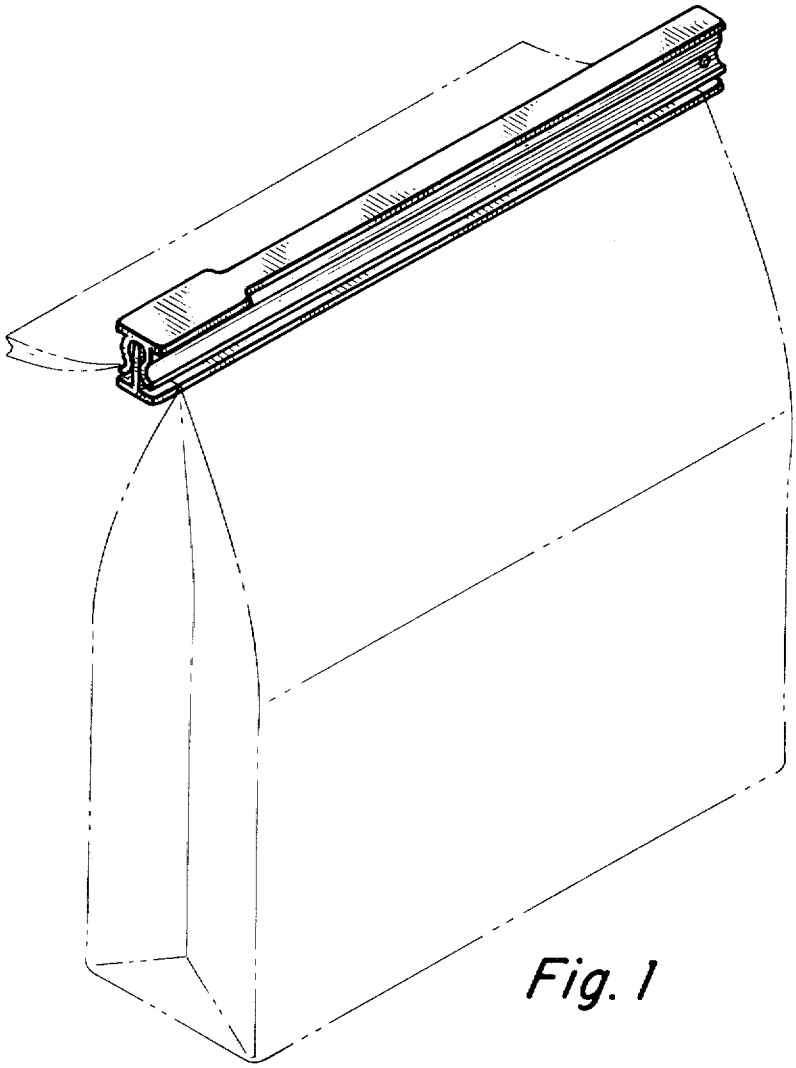

Fig. 1

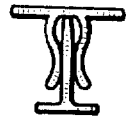

Fig. 5.



Fig. 6.



Fig. 7.

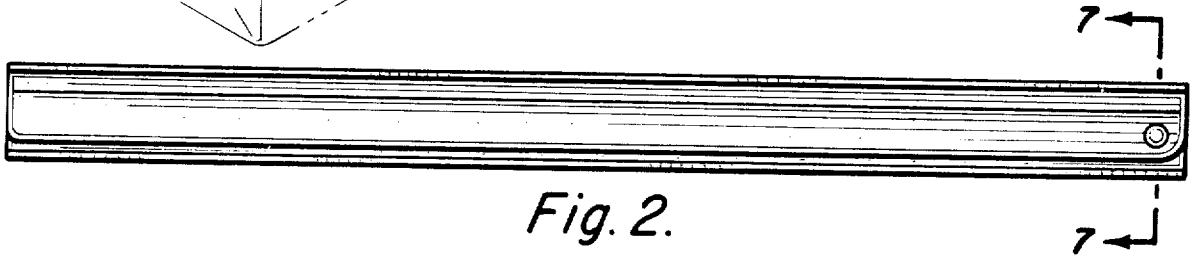

Fig. 2.



Fig. 3.

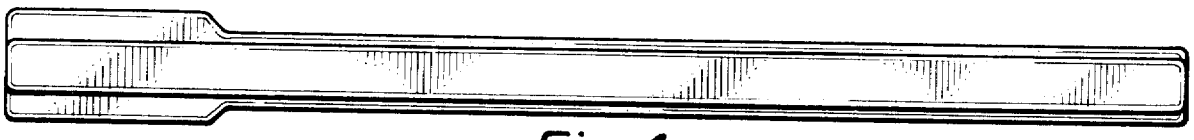

Fig. 4.