United States Patent [19]

Carr

[11] **3,835,735**

[45] **Sept. 17, 1974**

[54] **MANEUVERING ACCESSORY FOR U-JOINT OF SOCKET WRENCHES**

[76] Inventor: **Harry A. Carr,** 2934 Camintio, La Crescentia, Calif. 91214

[22] Filed: **Jan. 4, 1973**

[21] Appl. No.: **320,867**

Related U.S. Application Data

[63] Continuation-in-part of Ser. No. 159,800, July 6, 1971, abandoned, which is a continuation-in-part of Ser. No. 9,810, Feb. 9, 1970, abandoned.

[52] **U.S. Cl.** ..... **81/177 UJ,** 81/184

[51] **Int. Cl.** **B25b 13/00**

[58] **Field of Search** ..... 81/177 UJ, 177.6, 177 PP, 81/184, 57.26, 57.28; 403/81, 209, 208, 213, 149; 248/318, 214, 111, 314

[56] **References Cited**

UNITED STATES PATENTS

1,016,607	2/1912	Booman	81/57.26
1,412,284	4/1922	Hellman	81/177 UJ
1,659,838	2/1928	Schoeb	81/57.26
3,111,049	11/1963	Brehmer	81/57.26

FOREIGN PATENTS OR APPLICATIONS

526,561	9/1940	Great Britain	403/213

Primary Examiner—James L. Jones, Jr.
Attorney, Agent, or Firm—Sellers and Brace

[57] **ABSTRACT**

A two-piece manipulating accessory adapted to be detachably coupled to the shank of any conventional socket wrench U-joint by the socket fitting and including a handle manipulatable lengthwise of the wrench handle to pivot a socket fitting mounted on the shank thereby to guide the socket relative to fasteners located in cramped and remote locations.

10 Claims, 5 Drawing Figures

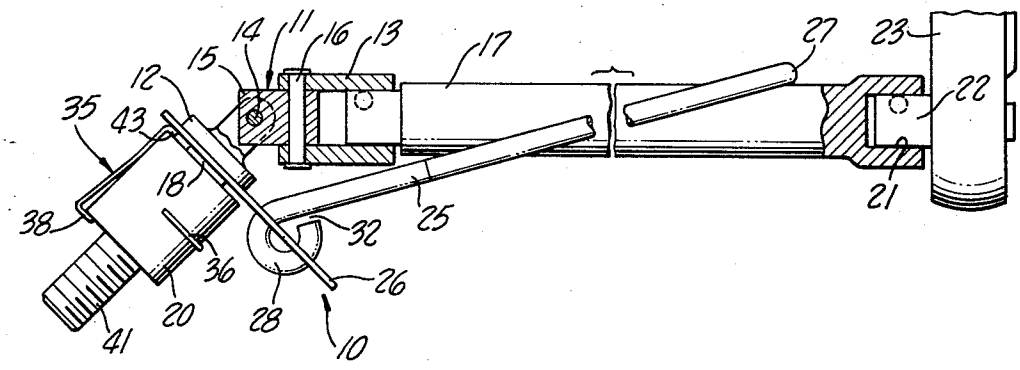

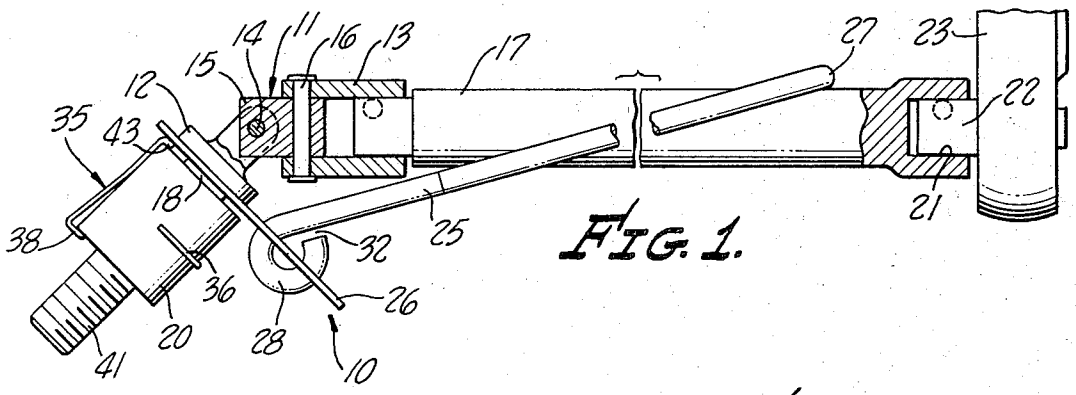

FIG. 1.

FIG. 2.

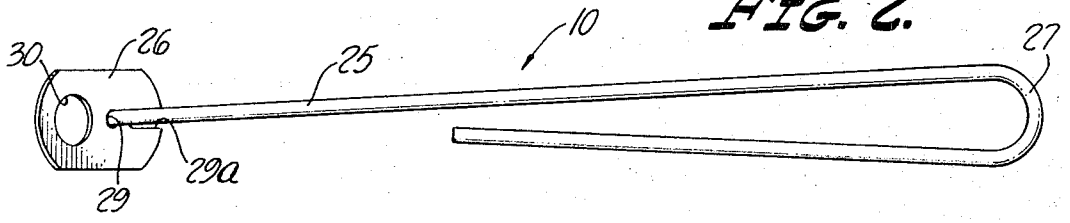

FIG. 4.

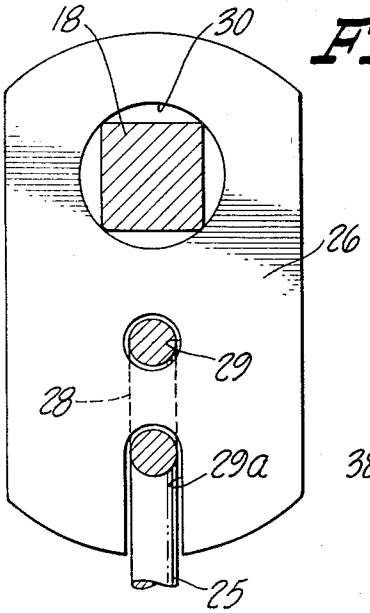

FIG. 3.

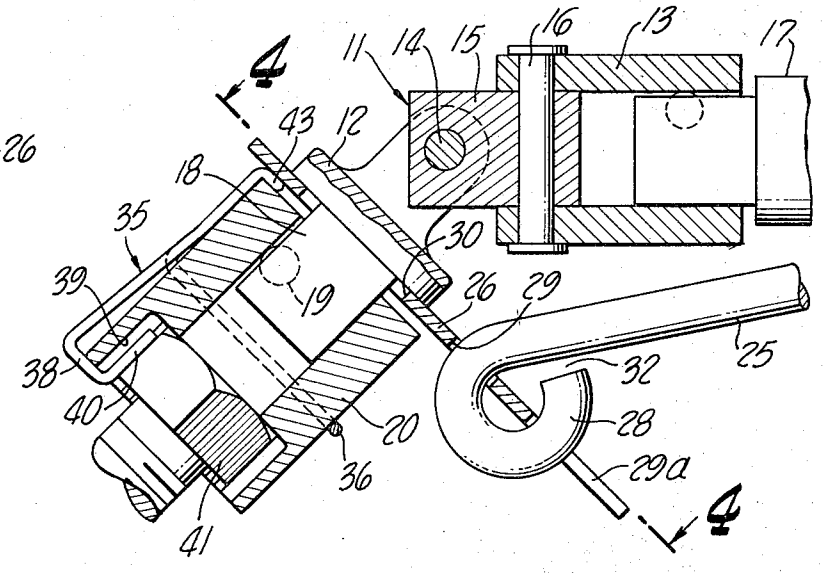

FIG. 5.

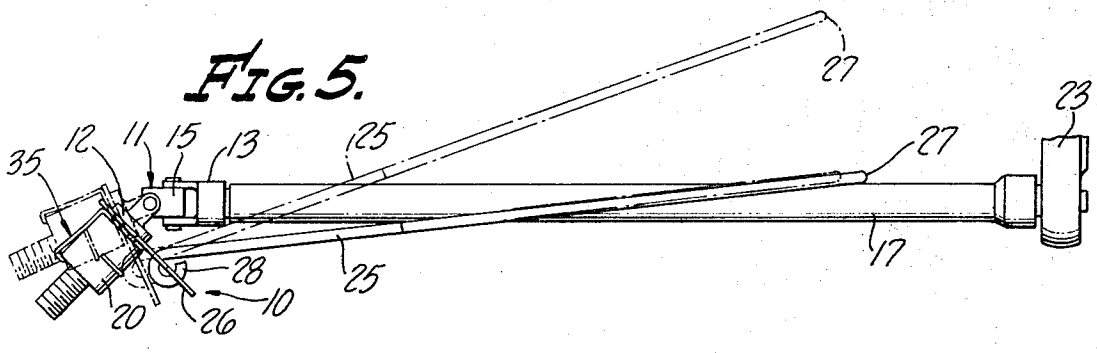

MANEUVERING ACCESSORY FOR U-JOINT OF SOCKET WRENCHES

This application is a continuation in part of my pending application for U.S. Letters Pat. Ser. No. 159,800 filed July 6, 1971, now abandoned, which was a continuation in part of my application Ser. No. 9,810, filed Feb. 9, 1970, now abandoned.

Not infrequently mechanics are confronted with the need for assembling or disassembling fasteners in locations inaccessible to the hand and having need for holding a socket wrench fitting tilted at some selected angle to align the same with a fastener or the assembly hole therefor. For example, if the axis of the fastener is at an angle to the vertical it can be a frustrating experience to hold the socket fitting at the proper angle while guiding it into a desired operating position relative to a fastener. Sometimes mechanics resort to the expedient of applying a heavy gauge grease or the like to the U-joint and relying upon the cohesiveness of the grease to hold the parts in different trial positions while making trial and error attempts to ascertain the proper positions of the parts.

The present invention provides a simple, easily-manipulated accessory readily attachable to a socket wrench U-joint and manipulatable quickly and effectively by a regulating handle while guiding the wrench into a desired operating position inaccessible to the mechanic's hand. The accessory comprises two principal parts including a part readily coupled and held assembled to the forward shank of any conventional wrench U-joint by the socket fitting and an operating handle movable independently of the wrench handle for pivoting the shank to any desired angle and held separably coupled to the first mentioned part, thereby permitting the handle to be used with wrench sockets having handle sockets of different sizes. The plane of the adjusting movement is readily changed by rotating the operating handle. Thus, by adjusting the position of the operating handle, the socket fitting can be held in any desired orientation and any angular position required for alignment with the axis of the fastener. It will therefore be apparent that the mechanic can guide the tool for insertion of a fastener into its assembly bore with equal facility and expediency.

The accessory handle is preferably formed from heavy gauge resilient wire stock and formed with an eyelet at one end shaped for separable assembly to a sheet metal stamping having a hole fitting loosely over the forward shank of a wrench U-joint. The stamping is detachable by adroit movement to a particular assembly position in order that the handle can be used selectively with stampings sized for wrenches of different size. One end of the handle has a loop shaped and sized to snap about the mid-length of a wrench handle but free for movement about as well as lengthwise of the handle.

It is therefore a primary object of the present invention to provide a novel, simple, manipulating accessory for use in manipulating socket wrench U-joints.

Another object of the invention is the provision of a simple, inexpensive, manipulating accessory for wrenches of the type equipped with a U-joint and held assembled over the forward shank thereof solely by the detachable wrench fitting.

Another object of the invention is the provision of a manipulating accessory readily attachable to a conventional socket wrench U-joint for use in controlling the position of the U-joint in a remote location.

Another object of the invention is the provision of an improvement in wrenches for use in cramped and restricted quarters inaccessible to the mechanic's hand and usable with conventional socket wrenches without need for altering the wrench in any respect.

Another object of the invention is the provision of a manipulating accessory for U-joint tools having a handle usable selectively with U-joints having shanks of different sizes and having a handle designed to be held loosely and resilient assembled to the tool handle but free to rotate and/or slide lengthwise thereof.

These and other more specific objects will appear upon reading the following specification and claims and upon considering in connection therewith the attached drawing to which they relate.

Referring now to the drawing in which a preferred embodiment of the invention is illustrated:

FIG. **1** is a side view of a conventional socket wrench equipped with a U-joint and having an illustrative embodiment of the invention manipulating accessory installed thereon;

FIG. **2** is a plan view of the accessory per se;

FIG. **3** is an enlarged cross sectional view of the fastener supporting end of the wrench;

FIG. **4** is a sectional view taken along line **4—4** on FIG. **3**; and

FIG. **5** is a view of the accessory similar to FIG. **1** and showing in dotted lines the accessory handle about to be snapped over a tool handle.

Referring initially to FIG. **1**, an illustrative embodiment of the invention socket manipulating accessory, designated generally **10**, is shown in operating position at the forward end of a socket wrench U-joint **11**. U-joint **11** comprises a pair of yoke members **12** and **13** interconnected by a short link **15** and a pair of pivot pins **14** and **16** having their axes at right angles to one another. Member **13** has a socket shaped to seat the square end of the rigid extension rod **17** whereas yoke member **12** has a square shank **18** provided with a spring pressed ball detent **19** serving in known manner to hold a wrench socket **20** coupled to shank **18**.

The extension rod **17** is formed with a square socket **21** at its outer end seating the square shank **22** of an operating handle **23** preferably equipped with a reversible ratchet mechanism.

The invention manipulating accessory **10** for socket **20** is here shown as including a manipulating handle **25** hinged to a mounting member **26** loosely journalled about shank **18** of the U-joint yoke member **12**. Mounting member **26** is stamped from heavy gauge sheet stock whereas handle **25** is preferably formed from stiff tempered wire stock having a long return bend **27** at one end and an eyelet **28** at its other end which is sufficiently open to permit it to be snapped loosely astride extension rod **17**. The member **26** at the smaller forward end of handle **25** is provided with an opening **29** and a deep notch **29***a* (FIG. **4**) cooperating to hold mounting member **26** assembled to handle **25** and free to pivot about the eyelet in the plane thereof. The large central opening **30** in member **26** fits loosely about the U-joint shank **18** and is held detachably assembled to the shank solely by any conventional wrench socket member **20**.

FIGS. **1** and **2** show socket member **20** as provided with a fastener keeper accessory **35** formed of highly

resilient spring stock including a loop **36** holding the accessory clamped to the side of the socket, hooked end **38** projecting upwardly into a recess **39** of a twelve point socket with the end **40** of the hook bearing resilient against one of the flat sides of a hexagonal fastener **41.** Accessory **35** is held in assembled position on the socket by a keeper hook **43** engaged over the rear end of the socket. This accessory is disclosed and claimed in my application for U.S. Letters Pat. Ser. No. 9,809, filed on Feb. 9, 1970, now U.S. Pat. No. 3,630,107, but is illustrated and described here because of its usefulness in retaining a fastener part captive in the socket while this socket is being maneuvered by accessory **10.**

Referring to FIGS. **1** and **3** it will be observed that eyelet **28** preferably is not closed against handle **25** so as to leave a gap **32** approximating the thickness of stamping **26.** This permits disassembly of the stamping to the eyelet by rotating the stamping from the eyelet by rotating it counterclockwise from the position shown in FIG. **4** until it lies flush against the underside of handle **25.** In this position the stamping can be slid lengthwise of handle **25** until disengaged. Reassembly is accomplished by the reverse of this operation, it being noted that notch **29*a*** is passed over the end of eyelet **28** until its inner end abuts the remote inner surface of the eyelet whereupon the stamping can be rotated away from handle **25.** The stamping is held positively assembled in all positions except the precise described assembly position.

The handle loop **27** is held loosely captive astride the extension member **17** simply by lowering it from above the position shown in FIG. **1** until the free end snaps about the extension where it remains until forcibly released. The handle is of course free to rotate and to slide lengthwise of the extension.

The mode of using the described invention will be quite apparent from the foregoing description of its components and their structural relationship to one another. Assuming that it is desired to insert the hexagonally headed cap screw **41** in a restricted location at some angle to the vertical, the first step is to insert the fastener head into the inlet end of socket **20** where it is frictionally retained by the resilient end **40** of retainer hook **38.** The operator then grasps handle **25** in one hand and wrench handle **23** in the other and advances the fastener into the restricted area. As will be readily apparent, to and fro movement of handle **25** is effective to pivot the forward member **15** of the U-joint **11** about its transverse axis **16.** Accordingly, the fastener can be tilted to any angle in a plane normal to the axis of pin **16.** Adjustment in any other plane is readily accomplished merely by rotating handle **25** about the axis of extension rod **17** and then proceeding to adjust handle **25** lengthwise of itself. When rotating the extension rod **17** about its longitudinal axis in a wrenching operation it is not necessary to shift handle **25** since this handle together with the attached manipulating member **26** are freely rotatable about the axis of shank **18.** The invention accessory is employed in a similar manner to guide the wrench socket onto a nut or bolt head when desiring to remove the same from its previously installed position.

While the particular maneuvering accessory for U-joint of socket wrenches herein shown and disclosed in detail is fully capable of attaining the objects and providing the advantages hereinbefore stated, it is to be understood that it is merely illustrative of the presently preferred embodiment of the invention, and that no limitations are intended to the details of construction or design herein shown other than as defined in the appended claims.

I claim:

1. In combination, a conventional socket wrench U-joint having a square shank protruding outwardly from the tool supporting end thereof, a manipulating accessory readily attached to and detached from said shank and usable to control the orientation and angularity of a socket wrench fitting attached to said U-joint shank to control the position of the wrench fitting in remote and restricted locations, said accessory comprising an elongated handle having hinged to the forward end thereof a mounting member loosely telescoped over the end and held captive and freely rotatable about the base of said shank solely by a socket wrench fitting coupled to said shank, said accessory being effective to tilt the shank end of said U-joint in opposite directions about its transverse axis in response to tilting movement imparted thereto by axial movement of said elongated handle, and said accessory being held in assembled position on said shank without interfering with the assembly and disassembly of a socket wrench fitting over the outer end of said shank.

2. The combination defined in claim **1** characterized in that said handle and said mounting member are readily separable from one another and normally held hingedly coupled together.

3. The combination defined in claim **1** characterized in that said handle comprises a length of stiff spring wire stock bent to provide an eyelet at one end and a long U-ahaped return bend loop at its other end.

4. The combination defined in claim **3** characterized in that the legs of said U-shaped return bend loop are shaped to snap astride said wrench handle means.

5. The combination defined in claim **4** characterized in that the legs of said return bend loop are free for movement lengthwise of and about the axis of said handle means while snapped astride thereof.

6. In combination with a wrench of the type having a handle equipped at one end with a U-joint having a shank detachably coupled to a socket fitting, that improvement for tilting said shank about its transverse pivot axis which comprises a manipulating accessory having a thin plate mounting member formed with an opening having a loose fit over said shank and held loosely coupled to said shank solely by a wrench socket fitting so long as a socket fitting is coupled to said shank, said plate member being provided with a handle extending generally lengthwise of said wrench handle, and said handle being manipulatable relative to said wrench handle and effective to tilt said shank about the pivot axis thereof to facilitate guiding the socket fitting into alignment with fastener means in restricted working environments.

7. The combination defined in claim **6** characterized in that said accessory handle is formed from resilient material and includes means for holding the same loosely captive against said wrench handle.

8. The combination defined in claim **6** characterized in that the handle of said manipulative accessory is formed of resilient U-shaped material with the legs thereof adapted to be snapped astride said wrench handle to hold said accessory handle releasably captive thereagainst.

9. The combination defined in claim 6 characterized in that the handle of said manipulating accessory is held coupled to said thin plate mounting member by an eyelet operating in a pair of openings in said mounting member.

10. The combination defined in claim 9 characterized in that one of said pair of openings comprises a notch opening through one edge of said mounting member.

* * * * *