PCT WORLD INTELLECTUAL PROPERTY ORGANIZATION
International Bureau

INTERNATIONAL APPLICATION PUBLISHED UNDER THE PATENT COOPERATION TREATY (PCT)

(51) International Patent Classification 5 : B01L 3/00, G01N 35/04

A1

(11) International Publication Number: **WO 94/29024**

(43) International Publication Date: 22 December 1994 (22.12.94)

(21) International Application Number: PCT/US94/04516

(22) International Filing Date: 25 April 1994 (25.04.94)

(30) Priority Data:
08/071,831 3 June 1993 (03.06.93) US

(71) Applicant: BECKMAN INSTRUMENTS, INC. [US/US]; 2500 Harbor Boulevard, Fullerton, CA 92634 (US).

(72) Inventors: GLENDAY, Ronald, C.; 1109 Northhampton, Fullerton, CA 92633 (US). GOODALE, David, L.; 6644 Moselle Circle, Yorba Linda, CA 92686 (US). MACK, Steven, D.; 5636 Lucretia Avenue, Mira Loma, CA 91752 (US).

(74) Agents: MAY, William, H. et al.; Beckman Instruments, Inc., 2500 Harbor Boulevard, Fullerton, CA 92634 (US).

(81) Designated States: AU, CA, JP, European patent (AT, BE, CH, DE, DK, ES, FR, GB, GR, IE, IT, LU, MC, NL, PT, SE).

Published
With international search report.

(54) Title: SAMPLE SEGMENT

(57) Abstract

A sample segment (10) including a body and wells (14) formed therein, selected wells (14b, 14f) including a flat exterior surface (56) surrounding a tapered end (64). The sample segment (10) may retain selected reagents (80), and a sealing cover (90) is held by ribs (74, 76), stretched and pressed against raised bosses (70) formed around the well openings (44) to provide a sure seal. The bosses (70) are discontinuous between adjacent wells (14). Selected wells may contain a free mixing element (82) for enhanced mixing. The segment (10) is uniquely adapted for automated handling and processing.

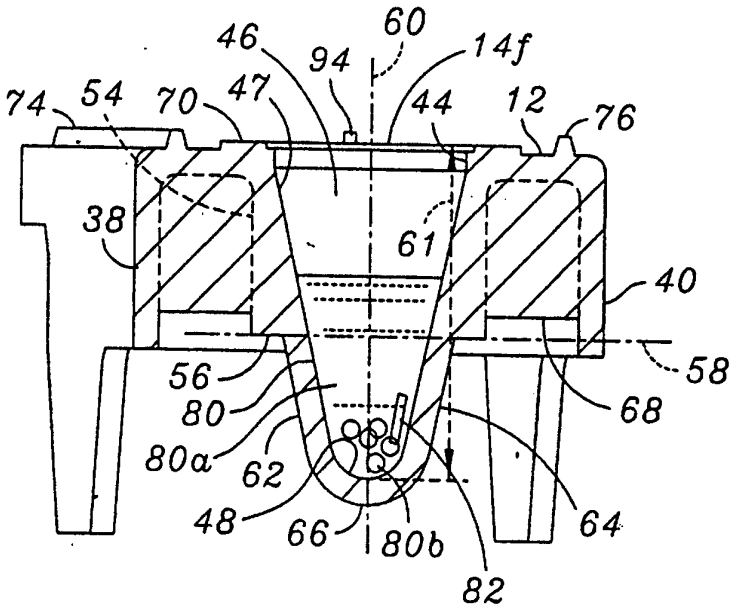

FOR THE PURPOSES OF INFORMATION ONLY

Codes used to identify States party to the PCT on the front pages of pamphlets publishing international applications under the PCT.

AT	Austria	**GB**	United Kingdom	**MR**	Mauritania
AU	Australia	**GE**	Georgia	**MW**	Malawi
BB	Barbados	**GN**	Guinea	**NE**	Niger
BE	Belgium	**GR**	Greece	**NL**	Netherlands
BF	Burkina Faso	**HU**	Hungary	**NO**	Norway
BG	Bulgaria	**IE**	Ireland	**NZ**	New Zealand
BJ	Benin	**IT**	Italy	**PL**	Poland
BR	Brazil	**JP**	Japan	**PT**	Portugal
BY	Belarus	**KE**	Kenya	**RO**	Romania
CA	Canada	**KG**	Kyrgystan	**RU**	Russian Federation
CF	Central African Republic	**KP**	Democratic People's Republic of Korea	**SD**	Sudan
CG	Congo			**SE**	Sweden
CH	Switzerland	**KR**	Republic of Korea	**SI**	Slovenia
CI	Côte d'Ivoire	**KZ**	Kazakhstan	**SK**	Slovakia
CM	Cameroon	**LI**	Liechtenstein	**SN**	Senegal
CN	China	**LK**	Sri Lanka	**TD**	Chad
CS	Czechoslovakia	**LU**	Luxembourg	**TG**	Togo
CZ	Czech Republic	**LV**	Latvia	**TJ**	Tajikistan
DE	Germany	**MC**	Monaco	**TT**	Trinidad and Tobago
DK	Denmark	**MD**	Republic of Moldova	**UA**	Ukraine
ES	Spain	**MG**	Madagascar	**US**	United States of America
FI	Finland	**ML**	Mali	**UZ**	Uzbekistan
FR	France	**MN**	Mongolia	**VN**	Viet Nam
GA	Gabon				

Sample Segment

Related Applications

This application is a continuation of U.S. Patent Application serial number 08/048,716, filed April 16, 1993.

The present application is related to the following applications that are commonly assigned and filed concurrently herewith, and which are incorporated herein by reference:

attorney docket 39D-1167A, entitled "Sample Handling System", filed in the names of David L. Goodale and Steven D. Mack, which is a continuation of U.S. Patent Application serial number 08/048,708, filed April 16, 1993; and

attorney docket 39D-1176A, entitled "Capillary and Capillary Retaining System", filed in the names of David L. Goodale and George I. Reeves, which is a continuation of U.S. Patent Application serial number 08/048,709, filed April 16, 1993.

Field

The present invention relates to the field of sample and reagent carrying devices, and more particularly to sample carrying devices useful in automated analyzers.

Background

Various forms of sample carrying devices are known in the art. For example U.S. Patent No. 3,713,985 (Astle) describes a testing device which includes a plurality of receptacles or wells interconnected integrally by a horizontal support member. The device includes vertical support members or legs and several of the receptacles contain a range of biological control reagents in an

SUBSTITUTE SHEET (RULE 26)

essentially dry form. The receptacles are sealed by a sealing material such as plastic film or aluminum foil by heat or pressure.

Still other forms of devices are known for use on automated analyzers. As an example, U.S. Patent No. 4,298,570 (Lillig) describes a tray section that has a plurality of wells. The tray section is carried by a turntable, which also receives sample containers. A sample is pipetted from a sample container into a well in the tray section, where additional dilutions of the sample are made. The diluted samples are then taken by an automated pipette to a reaction cell for analysis.

As described in the concurrently filed application (serial number _____ filed _____, attorney docket number 39D-1167) entitled "Sample Handling System", and identified above (and which is not admitted to be prior art with respect to the present invention by its mention in this Background), there is disclosed in such application a novel and inventive system which is useful with a sample device or segment that is moved about by the system to accomplish the required analysis. However, neither the Lillig or Astle device is suitable for use with such a system because, for example, neither device includes structure that could be readily gripped by a transport apparatus.

Further, such system is adapted to be used in a capillary electrophoresis analyzer that performs, for example, immunosubstraction capillary electrophoresis analyses. Such analyses require reagents, including liquid reagents, to be stored in the device. Although Astle describes a sealing material, sealing of the type of Astle tends to allow leakage between adjacent reservoirs,

particularly with a liquid reagent, and thus would be unsatisfactory for analytical techniques such as capillary electrophoresis, particularly where adjacent reagents are different.

Reagent mixing within the reservoirs of a sample device is also desirable as, for example, in an immunosubtraction capillary electrophoresis analysis. Both the Lillig and Astle devices, however, would require, for example, an external stirring device to accomplish effective mixing of the reagents.

Thus, there is a need for a sample-carrying device that is suitable for use in an analyzer wherein the sample-carrying device is transported within the analyzer to accomplish a desired analysis. There is also a need for a sample carrying device that can be more surely sealed to prevent leakage of reagents, such as liquid reagents, between adjacent reservoirs. There is also a need for a sample carrying device with improved mixing capabilities within the device reservoirs.

Summary of the Invention

The sample segment of the present invention overcomes the limitations described above. In one form of the present invention, the sample segment includes a body and a plurality of wells formed in the body. At least two of the wells include exterior surfaces around the exterior of such wells, formed at predetermined positions with respect to such wells. For example, the surfaces may be flat and may be disposed substantially midway along an interior axial dimension of such wells, or may be between a flange and an exterior end of such wells, or may be formed such that most of the interior volumes of such wells is between a plane defined by the surfaces and the openings of such wells.

SUBSTITUTE SHEET (RULE 26)

Additionally, a plane defined by the surfaces can be essentially perpendicular to central axes of the wells. The exterior ends of the wells around which the surfaces are formed are reduced. The reduced portion may be tapered and the end itself may be rounded. The interior walls of the wells may also be tapered.

Additionally, the sample segment may include curved opposite edges and the wells may be formed along an arc defined between such edges.

In another aspect of the present invention, the sample segment may include a body, a plurality of wells, and a raised boss on the body around the opening of one of the wells. Bosses may be formed around additional ones or all of the wells, and a cover may be applied to the bosses to seal the wells. The cover may be a label and a reagent may be in the wells before sealing.

In yet another aspect of the present invention, a sample segment may include a body, a plurality of wells, and a mixing element disposed in at least one of the wells. The mixing element may take the form of a length of wire.

Further, a sample segment in accordance with the present invention may include various combinations of the features just described.

Brief Description of the Drawings

These and other features and advantages of the present invention will be apparent from the drawings in which:

Figure 1 is a perspective view of a sample segment in accordance with the present invention;

Figure 2 is a section view of the sample segment of Figure 1 taken along line 2-2 thereof;

Figure 3 is a bottom view of the sample segment of Figure 1; and

Figure 4 is a simplified perspective view of a transport means with which the sample segment of Figure 1 may be used.

Detailed Description

With reference to Figure 1, a sample segment 10 in accordance with the present invention is defined by a body in the form of a flange 12 and a plurality of wells 14. The flange 12 is generally arcuate, having curved opposite edges 16, 18 and an arcuate center line 20. The flange 12 has ends 22, 24 that are generally perpendicular to the center line 20 and rounded corners 26, 28, 30, 32 and first and second surfaces 33a, 33b.

Depending lips 34, 36 and depending sides 38, 40 are formed around the periphery of the flange 12, the lips 34, 36 being proximate the ends 22, 24 and the sides 38, 40 being formed along most of the lengths of the edges 16, 18. Each of the sides 38, 40 includes two legs 42 suitable for supporting the sample segment 10 on a flat surface.

In the embodiment disclosed herein, seven wells 14, identified individually as wells 14a-14g in Figure 1, are defined in the sample segment 10. Each well 14 lies on the arcuate center line 20 and defines a round opening 44 (Figure 2) in the flange 12 and has an interior volume 46 defined by a tapered interior wall surface 47 and a rounded interior bottom surface 48. The exterior surfaces 50 of all but two of the wells 14 are similarly tapered and have similarly rounded exterior ends 52. In the specific embodiment disclosed herein, the interior volume 46 is about 205 μl, although other volumes may be suitable.

The two wells 14b, 14f, which each are the second well from the respective ends 22, 24, have an exterior cylindrical wall portion 54 proximate the flange 12, the wall portion 54 defining an annular flat surface or shoulder 56. The flat surfaces 56 on the shouldered wells 14b, 14f together define a plane 58 that is generally parallel to the flange 12. Thus, the flat surfaces 56 are generally

SUBSTITUTE SHEET (RULE 26)

perpendicular to central axes 60 of the wells 14b, 14f. The axis 60 also defines an interior axial dimension 61 between the top of the round opening 44 (as oriented in Figure 2) and the bottom surface 48. As seen, for example, in Figure 2, most of the interior volume 46 of each of the shouldered wells 14b, 14f is between the plane 58 and the openings 44 for such wells. The remaining lower exterior wall 62 of the shouldered wells 14b, 14f is similar to the other wells such as shouldered well 14g shown in Figure 1, having a tapered or reduced wall portion 64 and a rounded exterior end or end portion 66. As is also seen with reference to Figure 2, the flat surfaces 56 are between the first surface 33a and the exterior end 66, and the flat surfaces 56 can also be described as substantially midway along the interior axial dimension 61.

Reinforcing ribs 68 (Figures 2, 3) are formed between the flange 12, wells 14 and depending sides 38, 40, adding strength and rigidity to the sample segment 10. Indexing ribs 69a, 69b (Figure 1,3) are formed proximate the ends 22, 24 between the flange 12, lips 34, 36 and the end wells 14a, 14g, and are thus generally triangular in shape. The indexing ribs 69a, 69b are used to locate or index the sample segment 10 with respect to supports on an analyzer on which the sample segment 10 may be used as is described with reference to Figure 4 below.

Each well 14 includes an annular raised boss 70 formed around the openings 44. Each of the bosses 70 is separate and discontinuous from adjoining ones of the bosses 70 by means of grooves 72. Raised ribs 74, 76 are proximate the edges 16, 18, respectively, the ribs 74, 76 projecting from the flange 12 more than the bosses 70.

Selected ones or all of the wells 14 may carry a reagent 80, shown for illustration purposes in the cross-section view of well 14g in Figure 1. The reagents 80 may take the form of a liquid component 80a and a solid support component 80b as may be useful, for example, in capillary electrophoretic immunosubtraction. Such a technique is disclosed in U.S. Patent Application

SUBSTITUTE SHEET (RULE 26)

serial number 07/916,313, filed July 17, 1992, entitled "Analysis of Samples by Capillary Electrophoretic Immunosubtraction," in the name of Liu, et al. and which is incorporated by reference herein. Other forms of reagents for other types of analysis will be apparent to those skilled in the art. Selected ones or all of the wells 14 may also carry a mixing element 82, formed in this embodiment from round nickel chromium wire. The mixing element 82 is about 0.040 inch in diameter and about 0.125 inch long in this particular embodiment, but other dimensions may also be suitable. Preferably, each of the wells 14 that includes a reagent 80 also includes a mixing element 82, although such a relationship may not be necessary according to the mixing requirements for the reagent 80. Further, a mixing element 82 could be contained in a well 14 which contains no prepackaged reagents 80.

The sample segment 10 may include a sealing cover such as a label 90. The label 90 may be a laminate of metal foil and plastic film and is formed to cover the flange 12, and has alignment holes 92 which are sized to receive locating pins 94 on the flange 12 proximate the wells 14a, 14g. The label 90 may be printed on the exposed side and may carry, for example, human and/or machine readable characters.

SUBSTITUTE SHEET (RULE 26)

The sample segment 10 may be formed, for example, from HDPE via injection molding and is prepared by adding the desired reagents 80 and mixing elements 82. The label 90 is aligned by means of the locating pins 94. Preferably, the label 90 is first pressed across the ribs 74, 76 and affixed or "tacked" to the ribs 74, 76, such as by heat sealing to hold the label 90 in place. The label 90 is then pressed against and heat sealed to the bosses 70. Because the ribs 74, 76 project further from the flange 12 than the bosses 70, this sequence causes the label 90 to be slightly stretched as it is pressed and sealed against the bosses 70, ensuring that the label 90 is not wrinkled or otherwise deformed as it is fixed to the sample segment 10 and improving the seal between the label 90 and the bosses 70. The heat sealing of the label 90 is best accomplished when the plastic film side of the label 90 is against the plastic material from which the sample segment 10 is formed.

The sample segment 10 is useful with an automated transport means which receives and removably retains the sample segment 10 by means of the flat surfaces 56 and exterior walls 62 on the wells 14b, 14f. Such an automated transport means 98 (Figure 4) may include, for example, an arm 100 with forks or projections 102 at one end thereof. The projections 102 carry flexible boots 106 that include sealing upper rims 108 and interiors 110 shaped to conform to the exterior walls 62. The interiors 110 are connected to tubing 112 which is in turn connected to a controllable source of vacuum. The boots 106 and interiors 110 are spaced to align with the axes 60 of the wells 14b, 14f. The automated transport means 98 also may include means, such as a lead screw 111a and spindle 111b for rotational and vertical displacement of the arm 110.

The automated transport means may also include holding means for the sample segment 10 having supports 114 upon which the ends 22, 24 are supported with an open area 116 through which the projections 102 can be raised. Slots 118 in the supports 114 are spaced and sized to receive the indexing ribs 69a, 69b, thus indexing or accurately positioning the sample segment 10 with respect to the open area 116 and thus the automated transport means 98. To

retrieve and removably retain the sample segment 10, the sample segment 10 is disposed on the holding means and the boots are aligned with the wells 14b, 14f. The arm 100 is moved upwardly to receive the exterior walls 62 and flat surfaces 56. Vacuum is applied via the tubing 112, holding the sample segment 10 in place. Thus, by moving the arm 100, the sample segment 10 may be transported about, for example, for addition and removal of fluid via a probe (not shown) and the like. Further, the arm 110 may describe a motion wherein the arm 110 is rotated horizontally about a vertical axis, the boots 106 following a constant radius path about the vertical axis. Preferably, an arc of such a path matches the arcuate center line 20 of the flange 12.

The arm 100 with the sample segment 10 retained thereon may be agitated, for example, by being vibrated to achieve mixing of the well 14 contents. The mixing element 82, during such agitation, creates a thorough and rapid mixing action, the element 82 climbing the interior surface 47 as the vortexing action is induced by such agitation. This provides a scraping action that promotes a thorough mixing of well 14 contents.

Conversely, the sample segment 10 can be deposited at the supports 114 my lowering the arm 100 through the open area 116 until the sample segment 10 is indexed by the indexing ribs 69a, 69b engaging the slots 118 and the sample segment 10 comes to rest on the supports 114, releasing the vacuum, and further lowering the arm 100.

Thus, a sample segment 10 in accordance with the present invention is particularly and uniquely adapted for transport by means of automatic transport means. A sample segment 10 in accordance with the present invention provides a unique and leak-resistent seal over the wells 14 thereof. Further, a sample segment in accordance with the present invention includes a mixing element that provides improved and consistent mixing of reagents that may be contained within or added to the wells 14. These advantages are evident from these individually

SUBSTITUTE SHEET (RULE 26)

inventive aspects of the present invention, and further advantages are evident by combinations of such aspects.

While the segment 10 is referred to herein as a sample segment, it is to be recognized that the segment 10 is not to be limited merely to samples, but is useful for various reagents that may be used in analysis. Thus, the word "sample" is to be read and interpreted broadly to include but not be limited to, for example, liquid as well as solid patient samples, reagents, diluents, buffers, and the like, and solutions thereof.

The present invention is not to be limited to the particular embodiment described herein but shall be accorded the full scope of the appended claims and all equivalents thereof.

Claims

1. A sample segment for use with an automated analyzer, comprising:

a body;

a plurality of wells formed in the body, at least two of the wells having an interior axial dimension and including exterior flat surfaces around the exterior of such wells, the flat surfaces being disposed substantially midway along the interior axial dimension.

2. A sample segment as in claim 1 wherein the flat surfaces are annular.

3. A sample segment as in claim 1 wherein the exteriors of the at least two wells includes exterior ends and the exterior surface portion of the at least two wells between the flat surface and the ends of the wells is reduced.

4. A sample segment as in claim 3 wherein the reduced exterior surface portion is tapered.

5. A sample segment for use with an automated analyzer, including:

a flange having a first surface and a second surface;

a plurality of wells formed in the flange and having exterior surfaces and exterior ends proximate the first surface of the flange;

at least two of the wells including a flat surface formed about the exterior surfaces of such at least two wells, the flat surfaces being between the first surface of the flange and the exterior ends of such wells.

6. A sample segment as in claim 5 wherein the flat surfaces are substantially midway between the first surface of the flange and the exterior ends of such wells.

7. A sample segment as in claim 6 wherein the sample segment includes an indexing rib between the first surface of the flange and the exterior of a selected well.

SUBSTITUTE SHEET (RULE 26)

8. A sample segment as in claim 7 wherein the sample segment includes a second indexing rib between the first surface of the flange and the exterior of a second selected well.

9. A sample segment for use with an automated analyzer, comprising:

a body;

a plurality of wells formed in the body, each of the wells defining an interior volume, at least two of the wells including exterior flat annular surfaces around the exterior of such wells, the flat surfaces being disposed along the exterior of the wells such that, for each well, most of the interior volume of the well is between a plane defined by the flat surface and the opening of the well.

10. A sample segment as in claim 9 wherein the annular flat surfaces are perpendicular to a central axis of such reservoirs.

11. A sample segment as in claim 10 wherein the exteriors of the at least two wells includes exterior ends and the exterior surface portion of the at least two wells between the flat surface and the ends of the wells is reduced.

12. A sample segment as in claim 11 wherein the reduced exterior surface portion is tapered.

13. A sample segment as in claim 12 wherein the exterior end is rounded.

14. A sample segment as in claim 9 wherein the at least two wells include inner tapered walls and a rounded exterior end.

15. A sample segment for use with an automated analyzer, comprising:

a body;

a plurality of wells formed in the body, each of the wells having an opening in a surface of the body and defining an interior volume, at least two of the wells including exterior annular surfaces around the exterior of such wells, the

annular surfaces being disposed on the exterior of the wells such that, for each well, most of the interior volume of the well is between a plane defined by the flat surface and the opening of the well; and

a raised boss on the body surface around the opening of each of the wells.

16. A sample segment as in claim 15 wherein the sample segment includes areas that are not raised between adjacent bosses.

17. A sample segment as in claim 15 wherein the sample segment includes curved opposite edges and the wells are formed in an arc between the curved opposite edges.

18. A sample segment as in claim 17 wherein the segment further includes raised arcuate ribs proximate the curved opposite edges, and a cover that is applied over the ribs and bosses and is sealed to the bosses.

19. A sample segment as in claim 18 wherein the dimension by which the ribs are raised with respect to the body surface is greater than the dimension by which the bosses are raised with respect to the body surface and the cover is fixed across the ribs before the label is pressed and sealed against the bosses.

20. A sample segment as in claim 19 wherein the cover is a label including human and/or machine readable characters thereon.

21. A sample segment as in claim 20 wherein the label is heat sealed to the bosses.

22. A sample segment for use with an automated analyzer, comprising:

a body;

a plurality of wells formed in the body, each of the wells having an opening in a surface of the body and defining an interior volume, at least two of

SUBSTITUTE SHEET (RULE 26)

the wells including exterior annular surfaces around the exterior of such wells, the annular surfaces being disposed on the exterior of the wells;

at least one of the wells containing a reagent; and

a mixing element disposed in the well containing the reagent.

23. A sample segment as in claim 22 wherein the annular surfaces are disposed on the exterior of the wells such that, for each such well, most of the interior volume of the well is between a plane defined by the flat surface and the opening of the well.

24. A sample segment as in claim 22 wherein at least two of the wells contain a reagent and each well that contains a reagent includes a mixing element.

25. A sample segment as in claim 22 wherein the sample segment includes a raised annular boss on the body surface around the opening of at least the well containing the reagent.

26. A sample segment as in claim 25 wherein the sample segment includes curved opposite edges and the wells are formed in an arc between the curved opposite edges.

27. A sample segment as in claim 26 wherein the segment further includes raised arcuate ribs proximate the curved opposite edges, and a label that is applied over the ribs and bosses and is sealed to the bosses.

28. A sample segment as in claim 27 wherein the dimension by which the ribs are raised with respect to the body surface is greater than the dimension by which the bosses are raised with respect to the body surface and the label is stretched across the ribs before the label is pressed and sealed against the bosses.

29. A sample segment for use with an automated analyzer, comprising:

a body;

a plurality of wells formed in the body, each of the wells having an opening in a surface of the body and defining an interior volume; and

a raised boss on the body surface around the opening of one of the wells.

30. A sample segment as in claim 29 wherein the sample segment further includes a plurality of raised bosses on the body surface around selected ones of the wells.

31. A sample segment as in claim 29 wherein the sample segment includes curved opposite edges and the wells are formed in an arc between the curved opposite edges.

32. A sample segment as in claim 31 wherein the segment further includes raised arcuate ribs proximate the curved opposite edges, and a cover that is applied over the ribs and bosses and is sealed to the bosses.

33. A sample segment as in claim 29 wherein at least two of the wells including exterior annular surfaces around the exterior of such wells, the annular surfaces being disposed on the exterior of the wells such that, for each well, most of the interior volume of the well is between a plane defined by the flat surface and the opening of the well.

SUBSTITUTE SHEET (RULE 26)

34. A sample segment for use with an automated analyzer, comprising:

a body;

a plurality of wells formed in the body, each of the wells having an opening in a surface of the body and defining an interior volume; and

a mixing element disposed in at least one of the wells containing the reagents.

35. A sample segment as in claim 34 wherein the mixing element is a length of wire.

36. A sample segment as in claim 35 wherein the wire is nickel chromium.

37. A sample segment for use with an automated analyzer, comprising:

a body;

a plurality of wells formed in the body, each of the wells having an opening in a surface of the body and defining an interior volume;

at least two of the wells containing a reagent;

a mixing element disposed in at least one of the wells containing the reagents; and

a raised annular boss on the body surface around the opening of the wells containing the reagents.

38. A sample segment as in claim 37 wherein the reagent in the wells are different.

39. A sample segment as in claim 38 wherein the reagents in the wells are adapted for immunosubtraction.

40. A sample segment as in claim 37 wherein at least two of the wells including exterior annular surfaces around the exterior of such wells.

41. A sample segment for use with an automated analyzer, comprising:

a body;

a plurality of wells formed in the body, each of the wells having an opening in a surface of the body and defining an interior volume;

at least two of the wells containing a reagents;

a mixing element disposed in the wells containing the reagents;

raised annular bosses on the body surface around the openings of the wells containing the reagent; and

a cover applied over and sealed to the bosses.

42. The sample segment of claim 41 wherein the cover is a label.

43. A sample segment as in claim 42 wherein the label 41 includes human and/or machine readable characters.

44. The sample segment of claim 22 wherein the reagents includes a liquid component and a solid support component.

45. A reagent segment useful with an automated analyzer wherein the automated analyzer includes transport means having at least two bores and vacuum means for controllably applying a vacuum to the bores, reagent segment comprising:

a curved body having a first surface;

a plurality of wells formed in the first surface of the body, the reservoirs having interior and exterior surfaces, at least two of the reservoirs including an annular flat surface formed around the exterior of such at least two reservoirs, the annular flat surfaces being perpendicular to a central axis of such reservoirs, the reservoirs each including a tapered wall and a rounded bottom and being spaced and sized to be received within the bores;

a reagent disposed in selected ones of the wells;

a free mixing element disposed in at least one of wells in which the reagent is disposed;

SUBSTITUTE SHEET (RULE 26)

a raised annular boss formed around the openings of the wells in the first surface;

raised arcuate portions proximate edges of the first surface; and

a cover affixed to the first surface and sealed to the raised annular bosses.

5

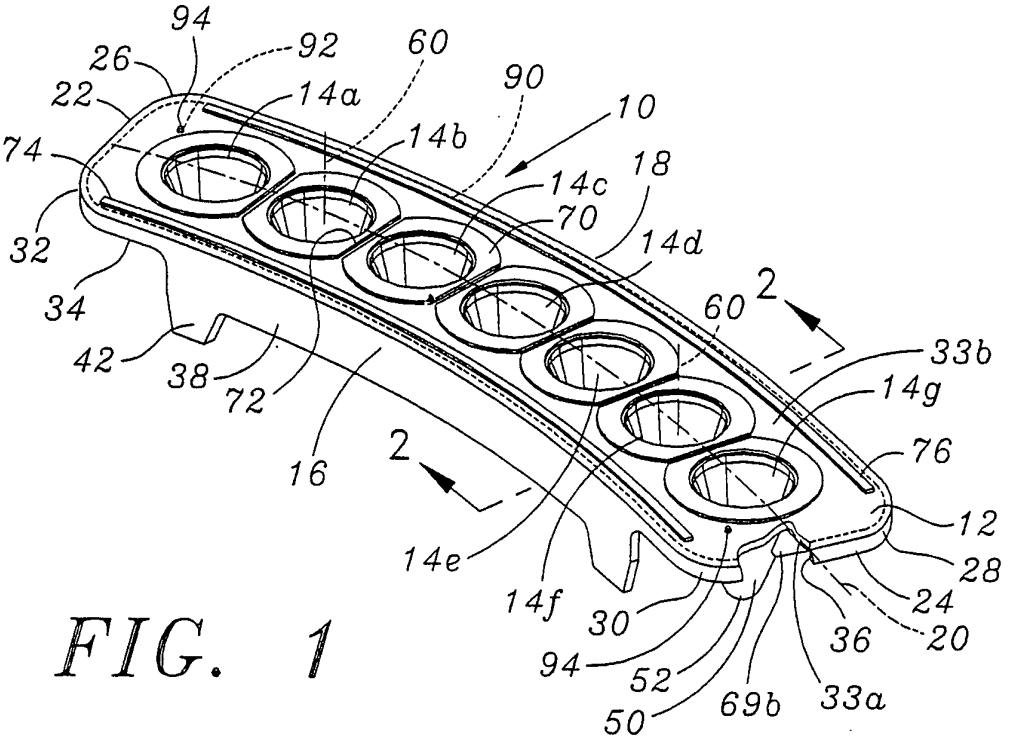
94
92
60
26
22
14a
90
10
74
14b
18
14c
70
32
14d
34
60
2
33b
42
38
72
14g
16
2
76
12
14e
28
14f
30
24
94
36
20
52
69b
33a
50

FIG. 1

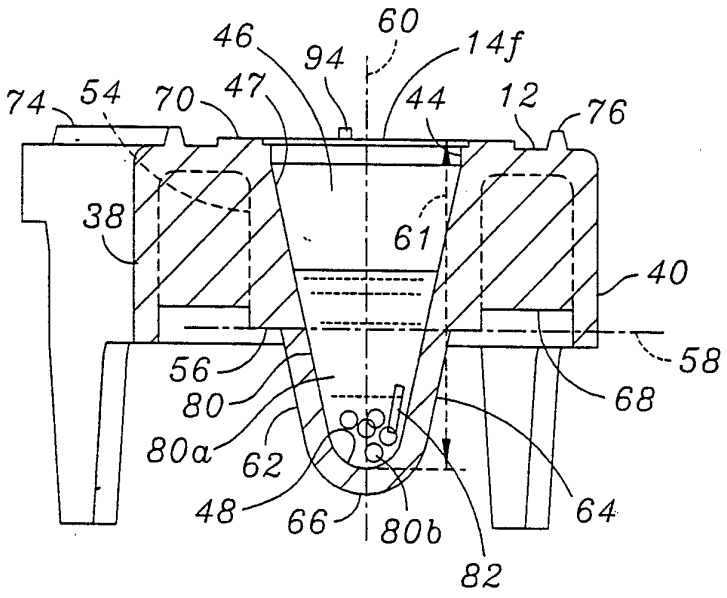
46
60
94
14f
74
54
70
47
44
12
76
38
61
40
56
58
80
68
80a
62
48
66
80b
64
82

FIG. 2

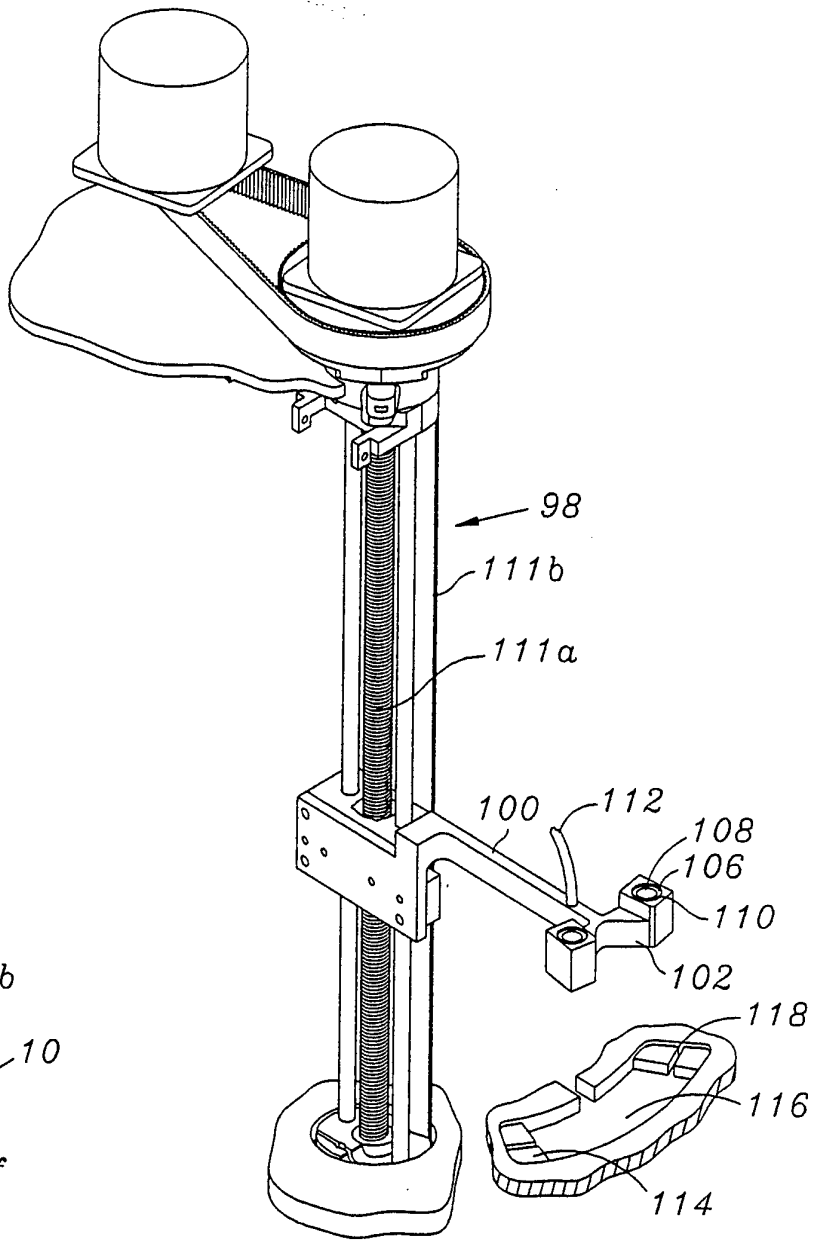
98
111b
111a
100
112
108
106
110
102
118
116
114

FIG. 4

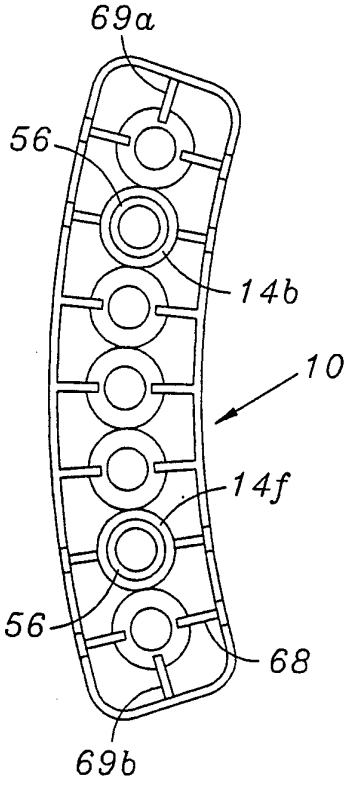
69a
56
14b
10
14f
56
68
69b

FIG. 3

INTERNATIONAL SEARCH REPORT

Inter nal Application No
PCT/US 94/04516

A. CLASSIFICATION OF SUBJECT MATTER
IPC 5 B01L3/00 G01N35/04

According to International Patent Classification (IPC) or to both national classification and IPC

B. FIELDS SEARCHED

Minimum documentation searched (classification system followed by classification symbols)
IPC 5 B01L G01N

Documentation searched other than minimum documentation to the extent that such documents are included in the fields searched

Electronic data base consulted during the international search (name of data base and, where practical, search terms used)

C. DOCUMENTS CONSIDERED TO BE RELEVANT

Category °	Citation of document, with indication, where appropriate, of the relevant passages	Relevant to claim No.
Y A	EP,A,0 415 307 (LABSYSTEMS OY) 6 March 1991 see column 2, line 44 - column 3, line 9	1-12,15, 16,33 22,23, 40,45
X Y A	WO,A,92 20448 (PACKARD INSTRUMENT COMPANY) 26 November 1992 see page 4, line 16 - page 5, line 24	29,30 1-12,15, 16,33 21,22, 25,37, 41,45
A	EP,A,0 329 579 (API SYSTEM SA) 23 August 1989 see column 5, line 52 - column 6, line 35	1-6, 9-12,15, 22,40,45

-/--

[X] Further documents are listed in the continuation of box C.

[X] Patent family members are listed in annex.

° Special categories of cited documents :

"A" document defining the general state of the art which is not considered to be of particular relevance

"E" earlier document but published on or after the international filing date

"L" document which may throw doubts on priority claim(s) or which is cited to establish the publication date of another citation or other special reason (as specified)

"O" document referring to an oral disclosure, use, exhibition or other means

"P" document published prior to the international filing date but later than the priority date claimed

"T" later document published after the international filing date or priority date and not in conflict with the application but cited to understand the principle or theory underlying the invention

"X" document of particular relevance; the claimed invention cannot be considered novel or cannot be considered to involve an inventive step when the document is taken alone

"Y" document of particular relevance; the claimed invention cannot be considered to involve an inventive step when the document is combined with one or more other such documents, such combination being obvious to a person skilled in the art.

"&" document member of the same patent family

Date of the actual completion of the international search	Date of mailing of the international search report
19 August 1994	30. 09. 94

Name and mailing address of the ISA	Authorized officer
European Patent Office, P.B. 5818 Patentlaan 2 NL - 2280 HV Rijswijk Tel. (+31-70) 340-2040, Tx. 31 651 epo nl, Fax: (+31-70) 340-3016	Bindon, C

Form PCT/ISA/210 (second sheet) (July 1992)

C.(Continuation) DOCUMENTS CONSIDERED TO BE RELEVANT

Category °	Citation of document, with indication, where appropriate, of the relevant passages	Relevant to claim No.
Y	EP,A,0 204 109 (BECTON, DICKINSON & COMPANY) 10 December 1986	34,35
A	see page 6, line 17 - page 13, line 19	1-6, 9-15,18, 20,22, 27,37, 38,41-45
Y	US,A,3 554 705 (JOHNSTON ET AL.) 1900	34,35
A	see column 4, line 28 - column 5, line 73	22,37, 41,45
A	EP,A,0 100 663 (CORNING GLASS WORKS) 15 February 1984 see figures	17,26, 31,45

1

INTERNATIONAL SEARCH REPORT

Information on patent family members

Intc onal Application No
PCT/US 94/04516

Patent document cited in search report	Publication date	Patent family member(s)		Publication date
EP-A-0415307	06-03-91	JP-A-	3092761	17-04-91
		US-A-	5096672	17-03-92
WO-A-9220448	26-11-92	NONE		
EP-A-0329579	23-08-89	FR-A-	2627191	18-08-89
		DE-D-	68910708	23-12-93
		DE-T-	68910708	10-03-94
		ES-T-	2047144	16-02-94
		JP-A-	1243983	28-09-89
		US-A-	5180555	19-01-93
EP-A-0204109	10-12-86	US-A-	4608231	26-08-86
		AU-B-	585874	29-06-89
		AU-A-	4561085	11-12-86
		JP-A-	61278762	09-12-86
US-A-3554705	12-01-71	AT-A-	291944	15-07-71
		BE-A-	722724	22-04-69
		CH-A-	476306	31-07-69
		DE-A-	1773584	04-01-73
		FR-A-	1578452	14-08-69
		GB-A-	1228010	15-04-71
		NL-A-	6808293	16-12-69
EP-A-0100663	15-02-84	DE-A-	3374605	23-12-87
		JP-B-	4039036	26-06-92
		JP-A-	59043363	10-03-84