(No Model.)

H. EASTWOOD.

WARPING FRAME.

No. 590,945. Patented Sept. 28, 1897.

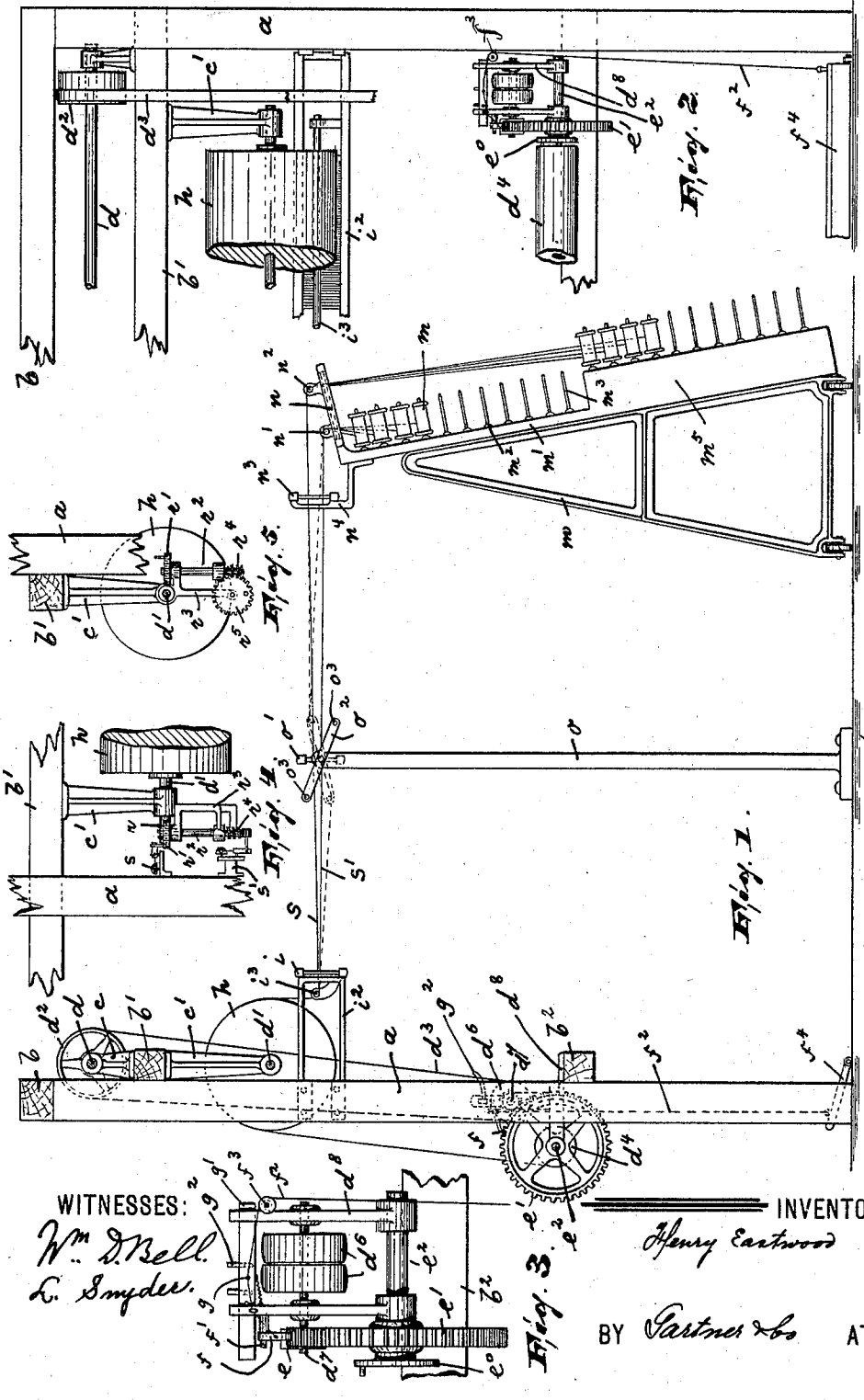

WITNESSES:
Wm. D. Bell.
L. Snyder.

INVENTOR.
Henry Eastwood

BY Gartner & Co ATTY'S.

THE NORRIS PETERS CO., PHOTO-LITHO., WASHINGTON, D. C.

UNITED STATES PATENT OFFICE.

HENRY EASTWOOD, OF LAKE VIEW, NEW JERSEY, ASSIGNOR TO EASTWOOD & WHITE, OF SAME PLACE.

WARPING-FRAME.

SPECIFICATION forming part of Letters Patent No. 590,945, dated September 28, 1897.

Application filed May 18, 1897. Serial No. 637,072. (No model.)

To all whom it may concern:

Be it known that I, HENRY EASTWOOD, a citizen of the United States, residing in Lake View, county of Passaic, and State of New Jersey, have invented certain new and useful Improvements in Warping-Frames; and I do hereby declare the following to be a full, clear, and exact description of the invention, such as will enable others skilled in the art to which it appertains to make and use the same, reference being had to the accompanying drawings, and to letters of reference marked thereon, which form a part of this specification.

The object of my present invention is to provide a warping or reeling machine of simple, strong, and durable construction and efficient in operation.

The invention consists in the improved warping or reeling machine, and in the combination and arrangements of the various parts thereof, substantially as will be hereinafter more fully described, and finally embodied in the clauses of the claim.

Referring to the accompanying drawings, in which like letters of reference indicate corresponding parts in each of the several views, Figure 1 is a side elevation of a warping-machine embodying my invention, with certain portions broken away and others removed; Fig. 2, a front elevation of a portion of Fig. 1; Fig. 3, an enlarged detail view of the receiving-beam-driving mechanism; and Figs. 4 and 5, a detail front and side elevation, respectively, of the indicating-drum and the mechanism operated thereby.

In said drawings, a represents the sides of the frame, and b b' b^2 the connecting or cross bars thereof. On the cross-bar b' are arranged the brackets c and c', forming the bearings for the shafts d and d', respectively. On the shaft d is arranged the pulley d^2, transmitting its motion through the endless belt d^3 to the fixed and loose pulleys d^6, mounted on the shaft d^7, which latter has its bearings in the brackets d^8, suitably supported on and secured to the cross-bar b^2.

On the shaft d^7 is secured a pinion e, meshing in the gear-wheel e', mounted on the shaft e^2, which latter has its bearings in the said brackets d^8 and is provided on one end with a pin-carrying disk e^0, as clearly illustrated in Fig. 3 of the drawings.

The gear-wheel e' is engaged by a pawl f, fulcrumed, as at f', to one of the brackets d^8, and is controlled by a cord or wire f^2, passing over a pulley f^3 and connected with a fulcrumed treadle-lever f^4. The cord f^2 is secured, as at g, to a bar or bolt g', slidingly arranged in the upper slotted portions of the brackets d^8, and is provided with an ordinary belt-shifter g^2.

The pin-carrying disk e^0 is adapted to support one end of the receiving-beam d^4, the other end of which is suitably supported within the frame a. On the shaft d' is mounted a drum h, covered with paper, felt, or any other suitable material, to prevent the threads S S', which are passing over said roller, from being soiled or damaged. A vertically-arranged reed i is suitably supported on the inwardly-projecting brackets i^2, which latter also form the supports for a rod i^3, preferably of glass or porcelain.

In the rear of the frame a are arranged a series of standards m, supporting the creel-frames m', connected by a series of parallel slats or strips m^2, on which latter are arranged the pins or spindles m^3, adapted to receive and support the bobbins m^4. The lower portion m^5 of the creel-frames projects rearward a distance equal to the length of the spindles m^3, by which arrangement the bobbins m^4 are placed in two different planes, and thus prevent the mixing up of the threads, especially when a large number of bobbins are used.

To the top portion of the creel-frames m' is secured a reed n, arranged substantially parallel with the spindles m^3, and is adapted to guide the threads S S' of the upper series and lower series of bobbins, respectively. A second reed n^3 is suitably supported by brackets n^4 in front of the creel-frames, and is also adapted to guide the said threads S S' after having left the reed n and having passed over the intermediate rods n' and n^2, which latter are suitably supported on the creel-frames and are preferably of glass or porcelain.

Between the frame a and the standards m is arranged an upright o, supporting a reed o' and also forming the bearings for the ful-

crumed skeleton o^2, adapted to engage with its parallel connecting-rods o^3 o^3 the said threads S S', to thus tighten the same, when the machine has been stopped for the purpose of repairs, adjustment, &c.

On the other end of the shaft d' (supporting the drum h) is arranged a worm r, meshing into the gear-wheel r', mounted on the shaft r^2, which latter has its bearings in a bracket r^3 and is provided at its lower portion with a worm r^4, in turn meshing into a gear-wheel r^5, revolubly mounted in the bracket r^3.

The gear-wheel r' is provided with a pin adapted to engage and thus operate the hammer of a gong s, while the gear-wheel r^5 is provided with a pin adapted to engage and operate the gong s', all as clearly illustrated in Figs. 4 and 5 of the drawings.

The operation of the machine is as follows: Motion is imparted to the pulley d^2, which latter, as heretofore stated, is connected by the endless belt d^3 with the fixed and loose pulleys d^6, the belt being shifted by means of the belt-shifter g^2, which latter in normal position retains the belt upon the loose pulley. In that position the pawl f is in engagement with the gear-wheel e', and thus prevents its rotation. When the machine is to be started, the operator, who is in front of the machine, presses the treadle-lever f^4 downward and holds the same in depressed position. The cord f^2 is thus pulled and the pawl f lifted out of engagement with the gear-wheel e'. Simultaneously the bolt or bar g', to which the cord f^2 is secured, is moved over against the action of the spiral spring, and thus throws the belt upon the fixed one of the pulleys d^6. The beam d^4 is thus started—that is to say, begins to rotate. The threads of the upper and lower series of bobbins m^4 are passed between the dents of the reed n, over the rods n' and n^2 to and through the dents of the reed n^3, and from there through the reeds o' and i, under the rod i^3 and over the drum h onto the receiving-beam d^4, on which they are wound, as will be manifest. It may also be stated that while the threads are passing from the drum h onto the receiving-beam d^4 the said threads can be picked by the operator in front of the machine. At every revolution of the gear-wheel r' the gong s is sounded, which will indicate that a certain number of yards of threads have been picked and wound, and it will be manifest that the number of yards thus indicated depends entirely upon the relative proportion of the drum h, its worm r, and the gear-wheel r'. A multiple of the number of yards indicated as per above will be sounded and thus indicated by the gong s', which latter, as heretofore stated, is operated through a pin carried by the gear-wheel r^5, which in turn receives its motion through the worm r^4, arranged on the shaft r^2.

When the apparatus is to be stopped for the purpose of repairing, adjusting, &c., the treadle-lever f^4 is released, whereby the bolt or bar g', through the action of its spiral spring, is returned to its normal position—that is to say, the belt d^3 is shifted upon the loose one of the pulleys d^6. Simultaneously the pawl f by its own weight engages the gear-wheel e'. The fulcrumed skeleton frame o^2 is swung into the position indicated in dotted lines in Fig. 1, whereby the parallel rods o^3 o^3 will press against the threads S S' and thus take up the slackness of the same, as will be manifest.

Substantially the same arrangement of parts as above described can be used for beaming, and I do not intend to limit myself to the precise construction shown and described, as various alterations can be made without changing the scope of my invention.

Having thus described my invention, what I claim as new, and desire to secure by Letters Patent, is—

1. The combination with the frame, of a receiving-beam revolubly mounted in said frame, an indicator-drum also mounted in said frame and parallel with the receiving-beam, a creel-frame in rear of said frame, guide-reeds carried respectively by the first-mentioned frame and said creel-frame, a reed intermediately arranged between said last-mentioned reeds, and a tension device fulcrumed on said intermediate reed and consisting of two parallel arms adapted to engage the warp-threads—passing from the creel-frame to the receiving-beam—at opposite sides of said intermediate reed, substantially as described.

2. In a machine of the character described, the combination with a series of standards, a series of stepped frames carried by said standards, a series of parallel slats or strips connecting said series of stepped frames, spindles or bobbin-supporting means mounted on said slats and at right angles thereto, the spindles on the lower series of slats being in a plane different to the spindles on the upper series of slats and in rear thereof, and a reed extending rearwardly from the top portion of the stepped frames and substantially parallel with the spindles or bobbin-supporting means, and two guide-rods above said reeds and in the planes of their respective bobbin-supporting means substantially as described.

3. In a machine of the character described, the combination with the frame, of the receiving-beam revolubly mounted in said frame, a gear-wheel suitably connected with the receiving-beam, a pinion meshing with said gear-wheel, a shaft supporting said pinion, a bracket-frame suitably supporting said shaft, a fixed and loose pulley on said shaft, a spring-controlled belt-shifter slidingly arranged in the bracket-frame, a fulcrumed pawl engaging the gear-wheel, a cord connected with said pawl and secured to the belt-shifter, a fulcrumed treadle-lever operating said cord, and an endless belt adapted to en-

gage the fixed or loose pulley respectively, all said parts, substantially as and for the purposes described.

4. The combination with an indicator-drum in a machine of the character described, of a shaft supporting said drum, a frame furnishing the bearings for said shaft a worm-wheel on said shaft, a pin-carrying gear-wheel meshing with said worm, a gong operated by said pin-carrying gear-wheel, a shaft supporting said gear-wheel and provided with a worm, and at right angles to the drum-supporting shaft a second gear-wheel meshing with the last-mentioned worm and provided with a pin and at right angles to the first-mentioned pin-carrying gear-wheel, and a second gong adapted to be operated by said last-mentioned pin, all said parts, substantially as and for the purposes described.

In testimony that I claim the foregoing I have hereunto set my hand this 11th day of May, 1897.

HENRY EASTWOOD.

Witnesses:
ALFRED GARTNER,
WM. D. BELL.