(19) Europäisches Patentamt
European Patent Office
Office européen des brevets

(11) EP 3 128 102 A1

(12) EUROPEAN PATENT APPLICATION

(43) Date of publication:
08.02.2017 Bulletin 2017/06

(51) Int Cl.:
E04F 15/04 *(2006.01)*

(21) Application number: **16180362.2**

(22) Date of filing: **20.07.2016**

(84) Designated Contracting States:
AL AT BE BG CH CY CZ DE DK EE ES FI FR GB GR HR HU IE IS IT LI LT LU LV MC MK MT NL NO PL PT RO RS SE SI SK SM TR
Designated Extension States:
BA ME
Designated Validation States:
MA MD

(30) Priority: **06.08.2015 NL 2015278**
25.11.2015 NL 2015848

(71) Applicant: **Beugt Houtzagerij en Parketindustrie BV**
5473 HC Heeswijk Dinther (NL)

(72) Inventor: **Oerlemans, Bart**
5473 HC Heeswijk-Dinther (NL)

(74) Representative: **Verhees, Godefridus Josephus Maria**
Brabants Octrooibureau B.V.
De Pinckart 54
5674 CC Nuenen (NL)

(54) BOARD FOR A WOODEN FLOOR WITH A MOTIF

(57) A board 1 for installing a wooden floor in a herringbone pattern has two long sides of which a first long side 7 is provided with a main groove 15 and a second long side 9 is provided with a main tongue 17, and has two short sides 11, 13, which are both provided with a transverse tongue 19, 21. The two transverse tongues on the short sides are disposed right opposite to each other and in the middle of the short side.

The second long side 9 is further provided with two auxiliary grooves 23, 25 spaced apart from each other which are each disposed adjacent to an end of the long side, while the distance 27 between an end of a transverse tongue 19, 21 and the most remote long side is as great as the distance 29 between a short side and the most remote end of the auxiliary groove 23, 25 adjacent to this short side.

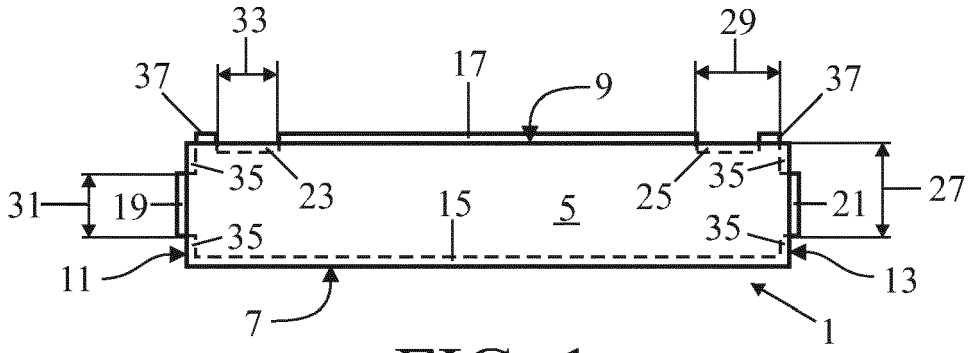

FIG. 1

EP 3 128 102 A1

Description

Field of the invention

[0001] The invention relates to a board for installing a patterned wooden floor, the board having an under side on which the board is installed on a sub-floor on installation, a top side forming a walking surface after installation, two long sides of which a first long side is provided with a main groove and a second long side is provided with a main tongue, and two short sides of which at least one short side is provided with a transverse tongue.

State of the art

[0002] A board of this type is known from US 1 787 027 A. With this known board a groove is present in the other short side. When these boards are installed in a herringbone pattern the tongues are fitted into grooves of adjacent boards so that the boards are secured relative to each other and cannot be displaced relative to each other. Installing a herringbone pattern requires, in addition to suchlike boards, also boards having a mirror inverted appearance. Worded differently: for installing a herringbone pattern both 'right hand' and 'left hand' boards are needed.

[0003] A disadvantage of this is that it is necessary to manufacture two different types of boards and that there is a chance of exchanging the two types. As a result, it is necessary for the person installing the floor to constantly stay alert and it regularly happens that a wrong board is used which has to be remedied then. It is alternatively possible that too many boards of one type and too few boards of the other type are delivered, so that first boards have to be exchanged before the floor can be finished.

Summary of the invention

[0004] It is an object of the invention to provide a board of the type defined in the opening paragraph with which a floor can be installed in a pattern, for example, a herringbone pattern and with which the disadvantages of the known boards described above are not found. To this end the board according to the invention is characterized in that the other short side is provided with a further transverse tongue, where the two transverse tongues on the short sides are oppositely disposed and are present in the middle of the short side, and in that the second long side is further provided with two auxiliary grooves spaced apart from each other and which are each disposed adjacent to an end of the long side, where the distance between an end of a transverse tongue on the short side and the most remote long side is equal or substantially equal to the distance between a short side and the most remote end of the auxiliary groove in the second long side adjacent to this short side. For installing a floor in a herringbone pattern with the boards according to the invention no 'left hand' and 'right hand' boards are needed, but a single type of boards can suffice, whereas yet all boards are in locking engagement with each other and cannot be displaced relative to each other. In consequence, one can never be mistaken when taking a board for installing the floor and it cannot happen that too few of one type or too many of the other type of board are available.

[0005] It is observed that from WO 98/38401 A is known a board with which also a herringbone pattern can be installed without another 'mirror inverted' board being needed. However, with this known board grooves are provided in both short sides so that there is no bond between the short sides and the long sides disposed against them. This problem may be solved by fitting loose splines into the short ends, but this asks for additional activities during the installation operation plus the chance of the loose splines being forgotten sometimes. Besides, loose splines always provide suboptimal fit, because the loose splines need room.

[0006] Furthermore, it is observed that from US 2 187 672 A is known a board with which also a herringbone pattern can be installed without another 'mirror inverted' board being needed. One short side of this board has a groove while on the other short side a tongue is disposed so that there is a bond indeed between the short sides and the long sides. However, half the length of the long side is provided with a groove while the other half of the long side is provided with a tongue. For installing a herringbone pattern it is then necessary for the length of the board to be twice its width. This leads to constrictions as regards the appearance of the floor as a result of which the herringbone pattern is more difficult to recognize.

[0007] For installing the boards in a double herringbone pattern, an embodiment of the board according to the invention is characterized in that the second long side is provided with two further auxiliary grooves spaced apart from each other and disposed adjacent to the auxiliary grooves, which further auxiliary grooves are each disposed at a distance from the adjacent auxiliary groove, the distance being twice the distance between each auxiliary groove and the adjacent short side. For installing the boards in a triple herringbone pattern are available two still further auxiliary grooves which are also disposed at a distance of twice the distance between each auxiliary groove and the adjacent short side of the further auxiliary grooves.

[0008] For installing the boards in a block pattern, a further embodiment of the board according to the invention is characterized in that auxiliary grooves are disposed over the entire second long side, where adjacent auxiliary grooves are disposed at a distance twice the distance between each auxiliary groove and the adjacent short side.

[0009] For realizing optimal securing of the boards relative to each other, an embodiment of the board according to the invention is characterized in that the length of the transverse tongue on the short side is equal or sub-

stantially equal to the length of the auxiliary groove in the second long side, so that the transverse tongue on both ends is in locking engagement with the auxiliary groove.

[0010] For securing the boards relative to each other over the entire length, a further embodiment of the board according to the invention is characterized in that sub-grooves are disposed between the transverse tongue on the short side and the two long sides, so that the boards over their entire width are locked with their grooves and tongues.

[0011] A still further embodiment of the board according to the invention is characterized in that the main tongue on the second long side extends between the auxiliary grooves in the second long side. As a result, also on the long sides adjacent boards are in engagement with each other over a greater part of the length.

[0012] For causing adjacent boards to be in engagement with each other over a still greater part of the length, a further embodiment of the board according to the invention is characterized in that a spline is disposed between each auxiliary groove in the second long side and the most adjacent short side.

[0013] The main groove in the first long side preferably extends over the entire first long side, so that also the first long side is in interlocking engagement with an adjacent board over a maximum distance. In addition and as a result of this it is possible to install the boards also in a double herringbone pattern (install each time two boards abutting each other over the entire length and the pairs in a herringbore pattern). The transverse tongues on the short ends can then be fitted into the main groove present in the first long side, so that during the installation operation care should be taken not to shift the boards relative to each other, but in a floor once installed the boards are all in locking engagement anyway.

Brief description of the drawing figures

[0014] The invention will be further described below in more detail with reference to embodiments of the board according to the invention and floors installed with the boards represented in the drawing figures, in which:

Fig. 1 represents a first embodiment of the board according to the invention;
Fig. 2 gives a perspective view of two boards represented in Fig. 1 in a position in which they are fitted into each other;
Fig. 3 represents a plurality of the boards represented in Fig. 1 in a herringbone pattern before they are fitted into each other;
Fig. 4 represents the boards represented in Fig. 3 after they have been fitted into each other;
Fig. 5 represents the boards represented in Fig. 1 in a double herringbone pattern;
Fig. 6 represents a second embodiment of the board according to the invention;
Fig. 7 represents a plurality of the boards represented in Fig. 6 in a double herringbone pattern before they are fitted into each other;
Fig. 8 represents a third embodiment of the board according to the invention; and
Fig. 9 represents a plurality of the boards represented in Fig. 8 in a block pattern before they are fitted into each other.

Detailed description of the drawing figures

[0015] Fig. 1 represents a first embodiment of the board according to the invention. The board 1 has an under side 3 (see Fig. 2) by which the board is installed on a sub-floor and a top side 5 which when installed forms a walking surface. The board has two long sides 7, 9 of which a first long side 7 is provided with a main groove 15 extending over the entire long side and of which a second long side 9 is provided with a main tongue 17.

[0016] This second long side 9 is further provided with two auxiliary grooves 23, 25 spaced apart from each other which are each disposed adjacent to an end of the long side. The main tongue 17 here extends between the two auxiliary grooves 23, 25. A spline 37 is dispoped between each auxiliary groove 23, 25 and the most adjacent short side 11, 13.

[0017] The board further has two short sides 11, 13 which are each provided with a transverse tongue 19, 21. The two transverse tongues 19, 21 are disposed opposite to each other and in the middle of the short side 11, 13. Sub-grooves 35 are present between the transverse tongues 19, 21 on the short side 11, 13 and the two long sides 7, 9.

[0018] The distance 27 between an end of a transverse tongue 19, 21 on the short side and the most remote long side is equal to the distance 29 between a short side and the most remote end of the auxiliary groove 23, 25 in the second long side 9 adjacent to his short side.

[0019] The length 31 of the transverse tongue 19, 21 on the short side 11, 13 is substantially equal to (slightly smaller than) the length 33 of the auxiliary groove 23, 25 in the second long side 9.

[0020] By way of illustration Fig. 2 represents two boards 1 in a perspective view in a position in which they are fitted together.

[0021] Figs. 3 and 4 represent a plurality of boards in a herringbone position before and after they are fitted together respectively.

[0022] The boards 1 may also be installed in a double herringbone pattern This is represented by way of illustration in Fig. 5.

[0023] In Fig. 6 is represented a second embodiment of the board 41 according to the invention. All components that are equal to those of the first embodiment described hereinbefore are referred to by similar reference numerals. The second long side 9 of this board 41 is further provided with two further auxiliary grooves 43 and 45 spaced apart from each other and disposed at a distance beside the auxiliary grooves 23 and 25. These fur-

ther auxiliary grooves are each disposed at a distance 47 from the adjacent auxiliary groove This distance is equal to twice the distance 49 between each auxiliary groove 23 and the adjacent short side 11.

[0024] In Fig. 7 are represented a plurality of boards 41 in a double herringbone position before they are fitted together to a double herringbone pattern.

[0025] In fig. 8 is represented a third embodiment of the board 51 according to the invention. All components that are equal to those of the second embodiment described hereinbefore are referred to by similar reference numerals. Auxiliary grooves 43, 45 and 53 are disposed over the entire long side 9, while adjacent auxiliary grooves are spaced apart from each other by a distance 5. This distance is equal to twice the distance 49 between each auxiliary groove and the adjacent short side.

[0026] In Fig. 9 are represented a plurality of boards 51 in a block position before they are fitted together into a block pattern.

[0027] Albeit the invention has been described in the foregoing based on the drawing figures, it should be observed that the invention is not by any manner or means restricted to the embodiments shown in the drawing figures. The invention also extends to all embodiments deviating from the embodiments shown in the drawing figures within the scope defined by the claims.

Claims

1. A board (1; 41; 51) for installing a patterned wooden floor, the board (1; 41; 51) having an under side (3) on which the board is installed on a sub-floor, a top side (5) forming a walking surface after installation, two long sides (7, 9) of which a first long side (7) is provided with a main groove (15) and a second long side (9) is provided with a main tongue (17), and two short sides (11, 13) of which at least one short side (11) is provided with a transverse tongue (19), **characterized in that** the other short side (13) is provided with a further transverse tongue (21), where the two transverse tongues (19, 21) on the short sides (11, 13) are oppositely disposed and are present in the middle of the short side, and **in that** the second long side (9) is further provided with two auxiliary grooves (23, 25) spaced apart from each other and which are each disposed adjacent to an end of the long side, where the distance (27) between an end of a transverse tongue (19, 21) on the short side and the most remote long side is equal or substantially equal to the distance (29) between a short side and the most remote end of the auxiliary groove (23, 25) in the second long side (9) adjacent to this short side.

2. A board (41; 51) as claimed in claim 1, **characterized in that** the second long side (9) is provided with two further auxiliary grooves (43, 45) spaced apart from each other and disposed adjacent to the auxiliary grooves (23, 25), which further auxiliary grooves are each disposed at a distance (47) from the adjacent auxiliary groove, the distance being twice the distance (49) between each auxiliary groove (23, 25) and the adjacent short side (11, 13).

3. A board (51) as claimed in claim 1 or 2, **characterized in that** auxiliary grooves (43, 45, 53) are disposed over the entire second long side (9) where adjacent auxiliary grooves are disposed at a distance (55) twice the distance (49) between each auxiliary groove (23, 25) and the adjacent short side (11, 13).

4. A board as claimed in claim 1, 2 or 3, **characterized in that** the length (31) of the transverse tongue (19, 21) on the short side (11, 13) is equal or substantially equal to the length (33) of the auxiliary groove (23, 25) in the second long side.

5. A board as claimed in claim 1, 2, 3 or 4, **characterized in that** sub-grooves (35) are disposed between the transverse tongue (19, 21) on the short side (11, 13) and the two long sides (7, 9).

6. A board as claimed in claim 5, **characterized in that** the main tongue (17) on the second long side (9) extends between the auxiliary grooves (23, 25) in the second long side.

7. A board as claimed in claim 5 or 6, **characterized in that** a spline (37) is disposed between each auxiliary groove (23, 25) in the second long side (9) and the most adjacent short side (11, 13).

8. A board as claimed in any one of the preceding claims, **characterized in that** the main groove (15) in the first long side (7) extends over the entire long side.

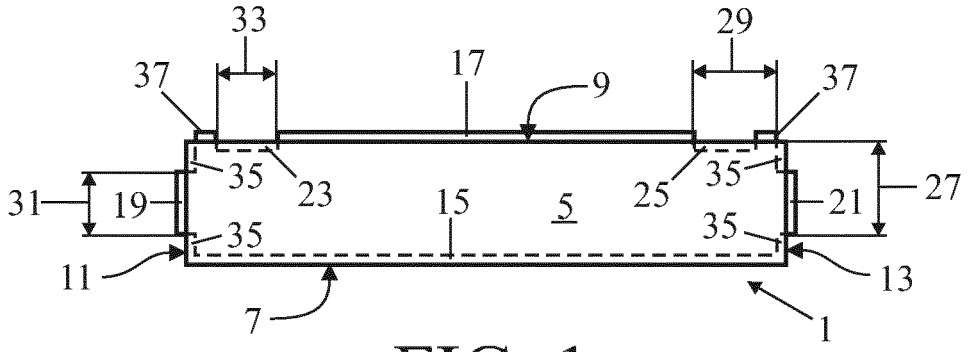
33
29
37
17
9
37
31
19
35
23
15
5
25
35
21
27
35
35
11
13
7
1

FIG. 1

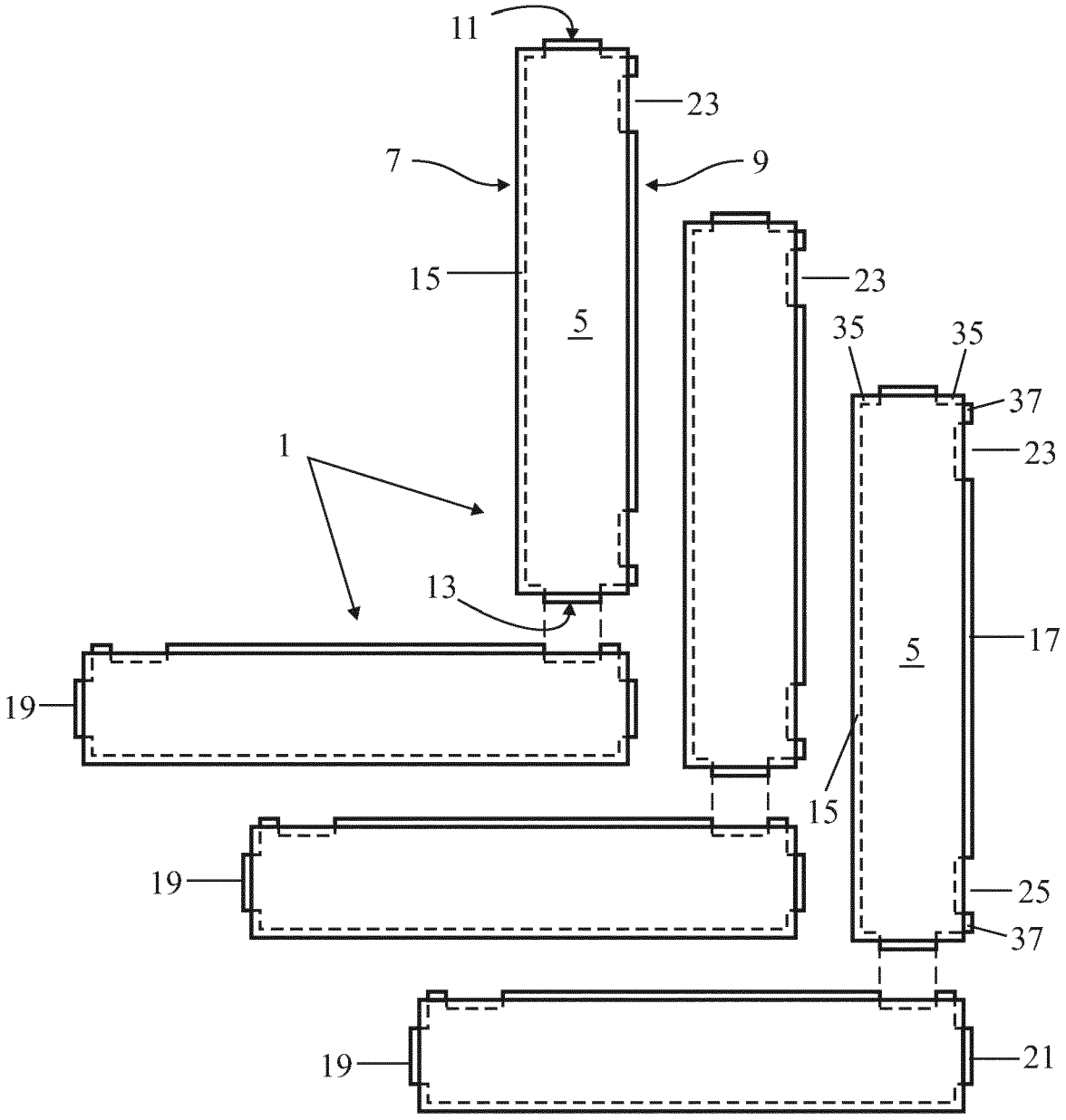
11
23
7
9
15
5
23
35
35
37
1
23
13
5
17
19
15
19
25
37
19
21

FIG. 3

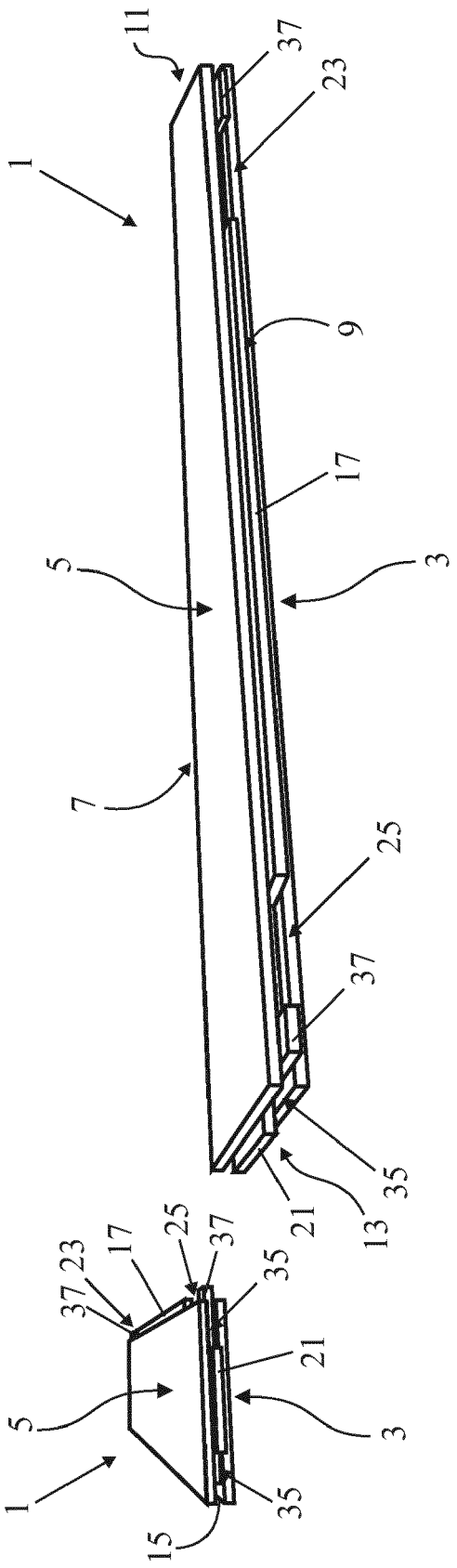

FIG. 2

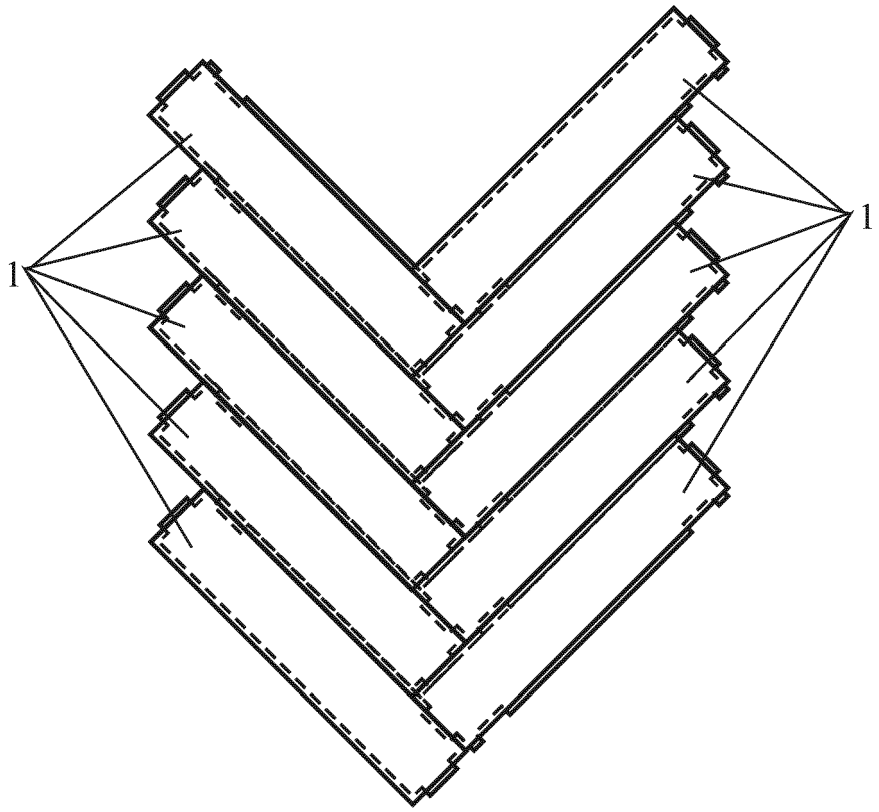

FIG. 4

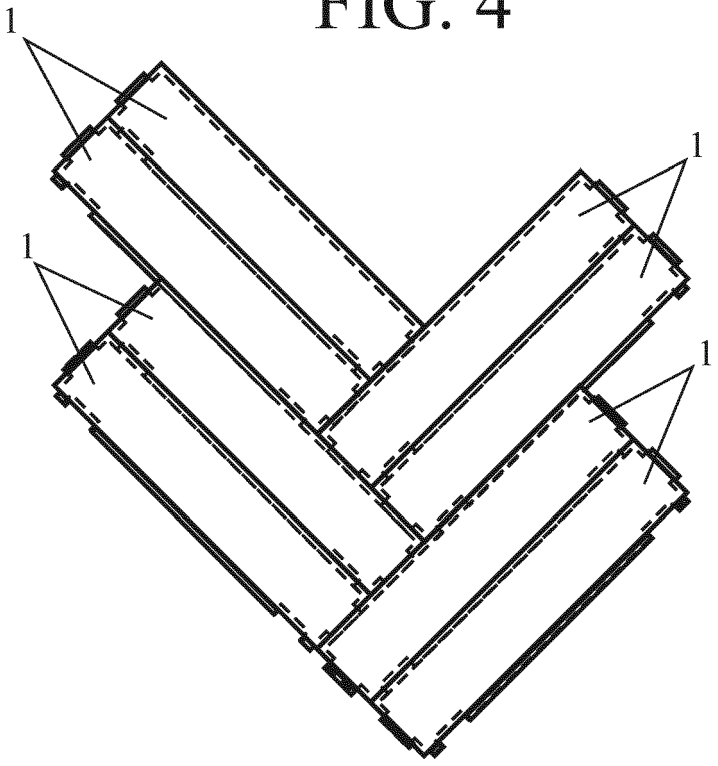

FIG. 5

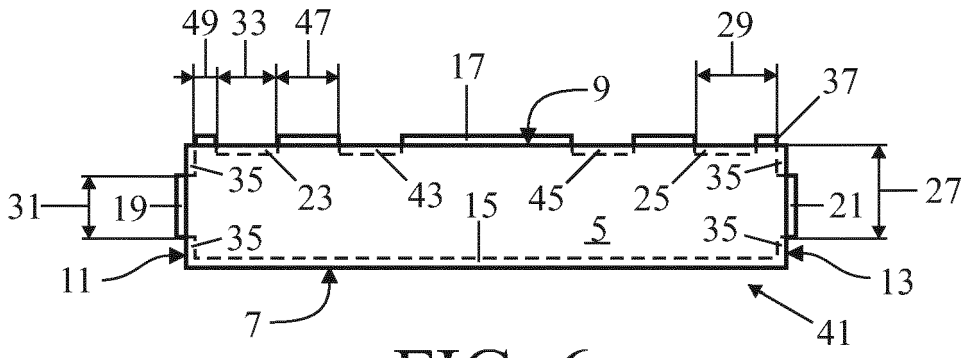
49
33
47
29
17
9
37
31
19
35
23
43
15
45
25
35
21
27
35
5
35
11
13
7
41

FIG. 6

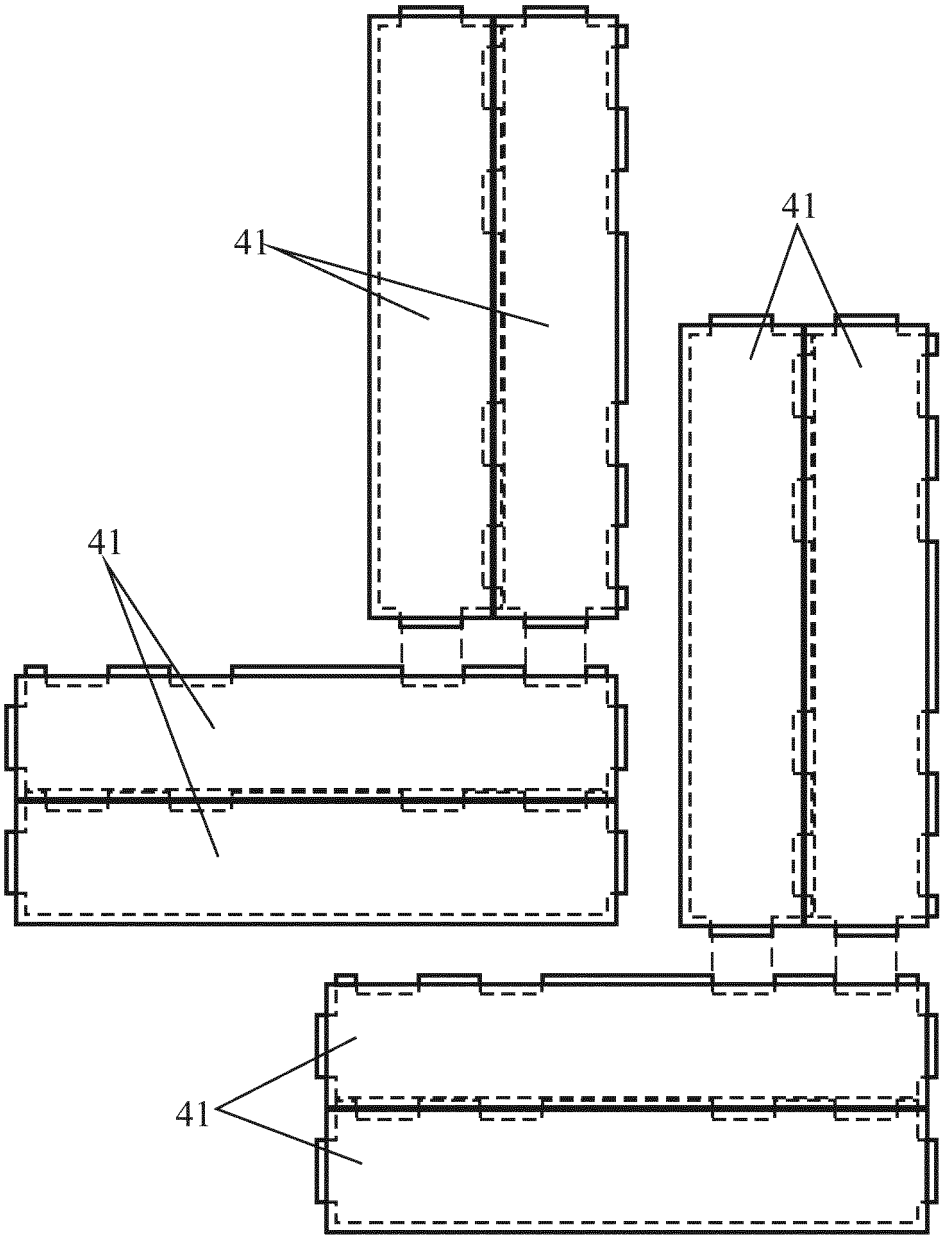
41
41
41
41

FIG. 7

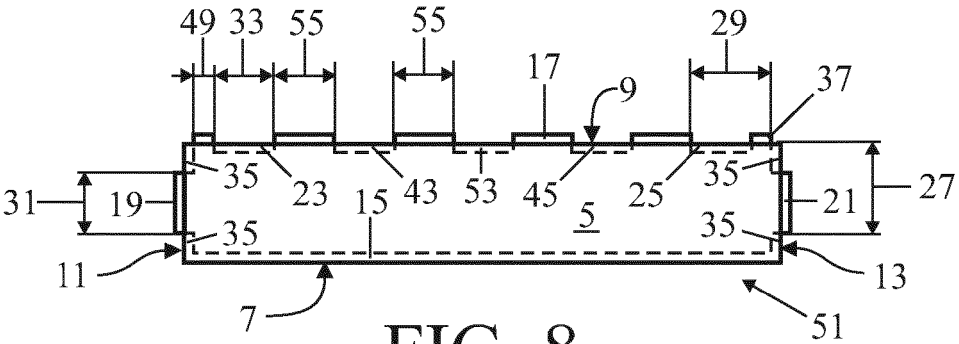
49
33
55
55
29
17
9
37
35
23
15
43
53
45
5
25
35
31
19
21
27
35
35
11
13
7
51

FIG. 8

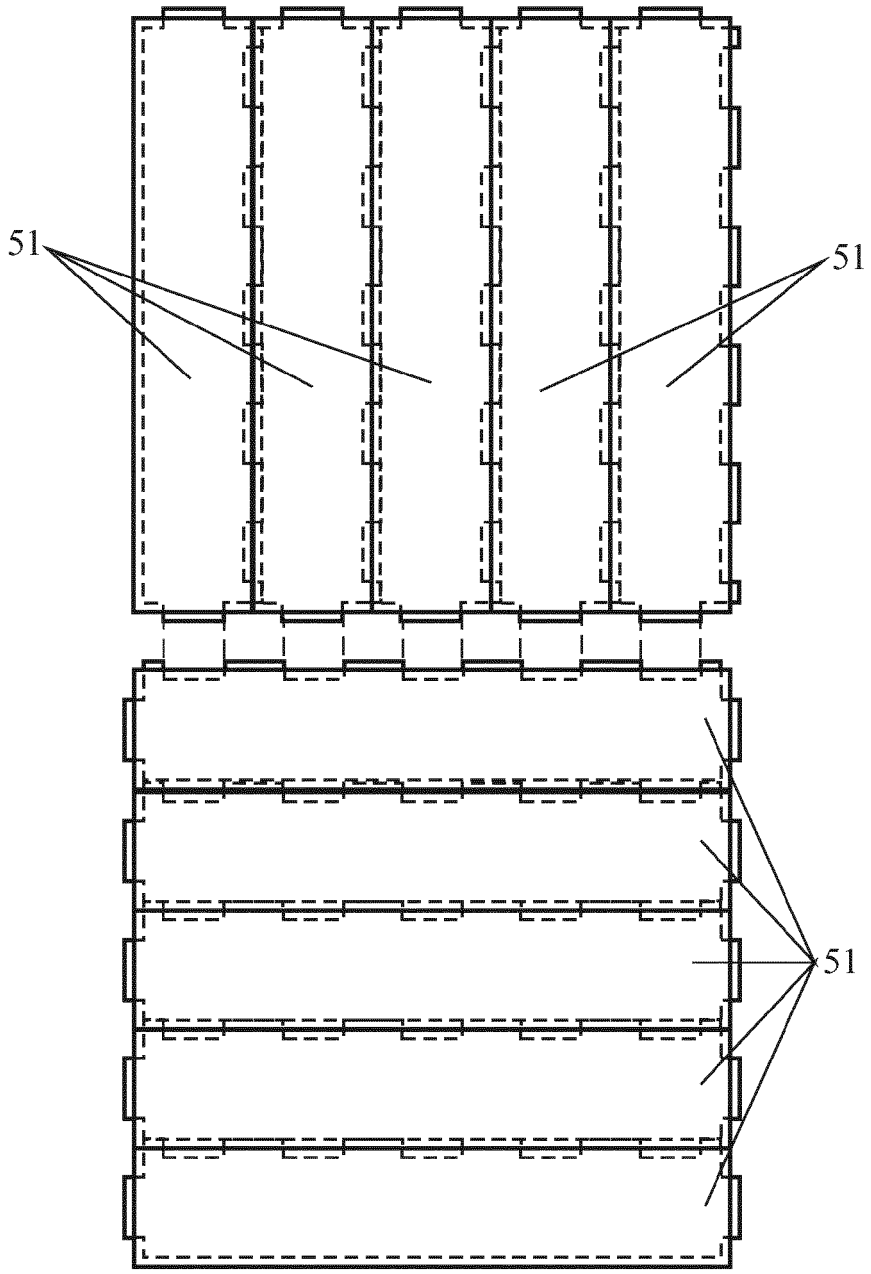
51
51
51

FIG. 9

Europäisches Patentamt
European Patent Office
Office européen des brevets

EUROPEAN SEARCH REPORT

Application Number
EP 16 18 0362

DOCUMENTS CONSIDERED TO BE RELEVANT

Category	Citation of document with indication, where appropriate, of relevant passages	Relevant to claim	CLASSIFICATION OF THE APPLICATION (IPC)
A	WO 02/075074 A1 (FAXE DESIGN AS [DK]; FAXE PER [DK]; ERIKSEN STEEN MANDSFELT [DK]) 26 September 2002 (2002-09-26) * figure 12 *	1-8	INV. E04F15/04
A,D	US 1 787 027 A (ALEX WASLEFF) 30 December 1930 (1930-12-30) * the whole document *	1-8	
A,D	US 2 187 672 A (WEDBERG AXEL G W) 16 January 1940 (1940-01-16) * the whole document *	1-8	
A,D	WO 98/38401 A1 (TARKETT AB [SE]; STRIDSMAN PER ERIC [SE]) 3 September 1998 (1998-09-03) * the whole document *	1-8	

TECHNICAL FIELDS SEARCHED (IPC)

E04F

The present search report has been drawn up for all claims

Place of search	Date of completion of the search	Examiner
Munich	15 December 2016	Topcuoglu, Sadik Cem

CATEGORY OF CITED DOCUMENTS

X : particularly relevant if taken alone
Y : particularly relevant if combined with another document of the same category
A : technological background
O : non-written disclosure
P : intermediate document

T : theory or principle underlying the invention
E : earlier patent document, but published on, or after the filing date
D : document cited in the application
L : document cited for other reasons

& : member of the same patent family, corresponding document

EPO FORM 1503 03.82 (P04C01)

ANNEX TO THE EUROPEAN SEARCH REPORT ON EUROPEAN PATENT APPLICATION NO. EP 16 18 0362

This annex lists the patent family members relating to the patent documents cited in the above-mentioned European search report. The members are as contained in the European Patent Office EDP file on
The European Patent Office is in no way liable for these particulars which are merely given for the purpose of information.

15-12-2016

Patent document cited in search report	Publication date	Patent family member(s)	Publication date
WO 02075074 A1	26-09-2002	DK 200101766 A	22-09-2002
		EP 1373656 A1	02-01-2004
		US 2004107665 A1	10-06-2004
		WO 02075074 A1	26-09-2002
US 1787027 A	30-12-1930	NONE	
US 2187672 A	16-01-1940	NONE	
WO 9838401 A1	03-09-1998	AT 248969 T	15-09-2003
		AU 6314398 A	18-09-1998
		DE 69817781 D1	09-10-2003
		DE 69817781 T2	15-07-2004
		EP 0966581 A1	29-12-1999
		ES 2206896 T3	16-05-2004
		SE 506254 C2	24-11-1997
		WO 9838401 A1	03-09-1998

EPO FORM P0459

For more details about this annex : see Official Journal of the European Patent Office, No. 12/82

REFERENCES CITED IN THE DESCRIPTION

This list of references cited by the applicant is for the reader's convenience only. It does not form part of the European patent document. Even though great care has been taken in compiling the references, errors or omissions cannot be excluded and the EPO disclaims all liability in this regard.

Patent documents cited in the description

- US 1787027 A **[0002]**
- WO 9838401 A **[0005]**
- US 2187672 A **[0006]**