July 16, 1929. W. HEUSSER 1,720,789

QUICK ACTING PRESSURE SEATED CAP FOR RECEPTACLES

Original Filed Dec. 5, 1923

FIG. 4.

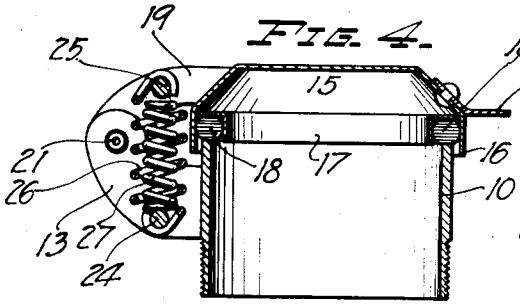

FIG. 1.

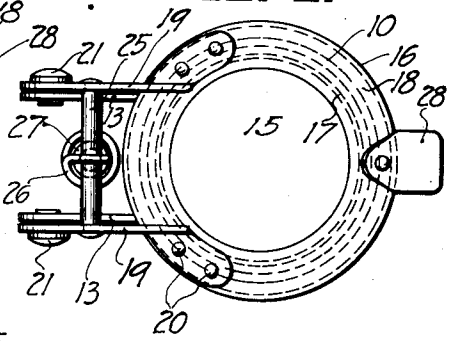

FIG. 3.

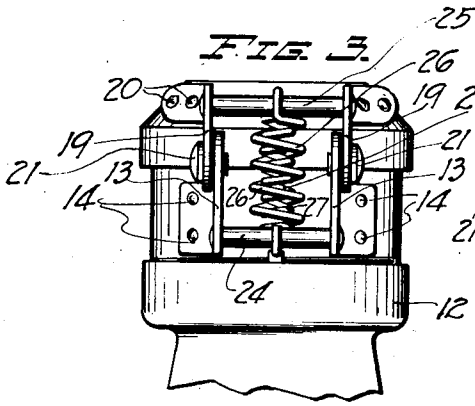

FIG. 2.

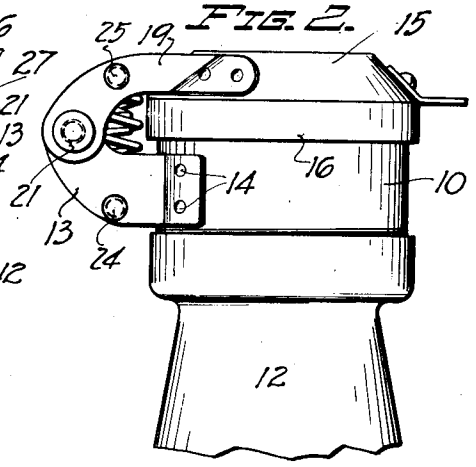

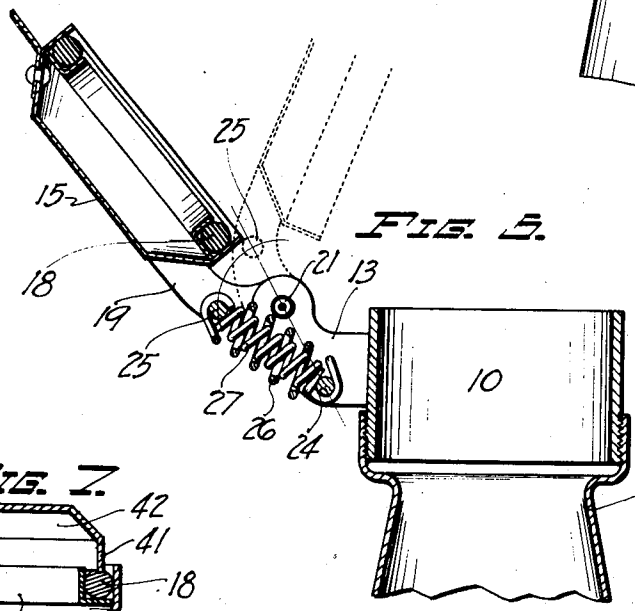

FIG. 5.

FIG. 6.

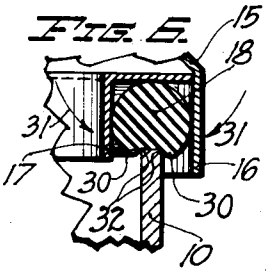

FIG. 7.

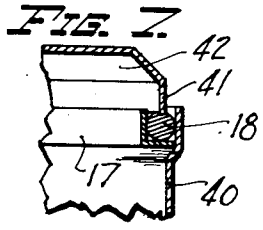

Inventor
WILFRID HEUSSER,

By

Attorney.

Patented July 16, 1929. 1,720,789

UNITED STATES PATENT OFFICE.

WILFRID HEUSSER, OF SALT LAKE CITY, UTAH.

QUICK-ACTING PRESSURE-SEATED CAP FOR RECEPTACLES.

Refiled for abandoned application Serial No. 678,639, filed December 5, 1923. This application filed December 24, 1927. Serial No. 242,479.

This invention relates to a quick-acting pressure-seated cap for receptacles, and more especially receptacles for containing liquids, such as gasoline when confined in tanks, or water when confined in automobile radiators, although its use is not limited to these purposes. The present application is substituted for the one filed Dec. 5, 1923, Serial No. 678,639, which was abandoned.

The principal objects of the invention are to provide a device which shall:

First. Form a simple, efficient and durable pressure-seated closure.

Second. Be quick-acting, that is to say, be operable by simply a stroke of the hand.

Third. Not be subject to the excessive wear upon the threads, as is the case with many of the caps in ordinary use.

In attaining these objects, I provide a tubular body which may be threaded to fit a connection in the receptacle, or form an integral part thereof. Seated on this body is a hinged cover, the fulcrum pin of which is spaced an appreciable distance apart from the body. Between the fulcrum pin and the body is a tension member fastened so as to exert its force in one position to hold the cover closed, and in another position, to hold the cover open. A compression member is provided to cushion and balance the force of the tension member in the open position of the cover.

The features of this invention for which the protection of Letters Patent is desired, are collectively grouped in the claims concluding this specification.

In the drawing:

Fig. 1 represents a plan with the cover closed;

Fig. 2, a side elevation, with a portion of a radiator neck included;

Fig. 3, the rear elevation;

Fig. 4, a vertical center section, the radiator neck being omitted.

Fig. 5, a vertical center section, with cover in the open position;

Fig. 6, a fragmentary section, enlarged to bring out details; and

Fig. 7, a fragmentary vertical center section showing a modification.

Referring to the drawing, 10 indicates a tubular body portion, which may have its lower end threaded to fit a radiator neck 12, and its upper edge made plane and smooth for seating against a sealing member 18, concentric therewith. Hinge lugs 13 project laterally outward from the body portion 10, are spaced apart from each other, and may be rigidly attached to the body portion 10 by any suitable means, for instance, rivets 14.

The cover 15, has the depending annular flanges 16 and 17 extending along its perimeter and these flanges together form an inverted channel into which the sealing member 18 may be sprung. The sealing member preferably consists of an endless ring, of rubber or other resilient material, whose cross-section is preferably round or elliptical.

When the sealing ring is in place on the seat of the tubular body portion, as shown in Fig. 4, the nature of the contact between the two parts when they first touch, is that of a plane, tangent to a ring in a circumferential line substantially parallel to the center plane of the ring. As the annular area of the seating face of the body portion is considerably less than the area of the annular center section of the sealing ring, it will be obvious that, as the spring pressure is brought to bear, a contact, very close at all points of the circumference, must be formed between the sealing ring and its seat. Gradually, as the spring pressure asserts itself fully, the seat will sink into the sealing ring much after the manner illustrated, in somewhat exaggerated form, in Fig. 6. When this takes place, the bulging cheeks 30, formed of the sealing ring, on each side of the wall of the body portion, will extend below the plane of the seat, and will cause the sealing ring to bear down inwardly from two principal directions, (as indicated by the arrows 31 in Fig. 6), over the two circumferential corners 32 of the body wall, thus forming a very effectual, simple and durable closure.

Hinge lugs 19, spaced apart from each other, and arranged in co-acting relation to the hinge lugs 13, may be rigidly attached to the cover 15, by rivets 20. Hinge lugs 19 are pivoted to hinge lugs 13 by pins 21.

A pin 24, forming a tie, connects the two lugs 13 to each other, and similarly, the pin 25 ties the two lugs 19—19 to each other. A tension spring 26 is arranged to exert its force between the pins 24 and 25, thereby drawing the cover 15 down tightly, and completing the seating contact between the sealing ring 18 and the body portion 10, as previously described.

Between the pins 24 and 25, and preferably inside the tension spring 26, is the compres-

sion spring 27, which, in the closed position of the cover, as shown in Fig. 4, is somewhat shorter than the inside distance between the pins 24 and 25, so as not to interfere with the free action of the tension spring, in seating the cover.

In opening the cover, which may be accomplished by grasping the finger clip 28, the spring 26 is increasingly stretched until the axis of pin 25 lies in the straight line passing through the axis of the pin 24, and the axis of the hinge pins 21. From this point backwardly, the tension spring 26 is allowed to contract until the pin 25 bears down on the compression spring 27, as shown by the full lines in Fig. 5. Thus, the compression spring forms a cushion or buffer between the pins 24 and 25, and compresses slightly until the tension of the spring 26 is counterbalanced, thereby holding the cover 15 substantially rigid in the open position.

It will be observed that when the cover passes through one complete opening or closing movement, the axis of the coiled spring 26 will generate a substantially plane V-shaped figure, and that the hinge axis will be located within the angle of the V, substantially perpendicular to the plane thereof. Thus, the spring axis in the closed position of the cover, lies on one side of the hinge axis, and in the open position of the cover, the spring axis lies on the other side of the hinge axis.

While hinged covers per se are old, the manner of sealing the closure and the placing of a coiled spring, with its axis always in a straight line, between two hinges, so as to be operative in one position to hold the cover closed and in another position to hold the cover open, as shown and described herein, are believed to be essentially novel.

While I have shown and described one specific embodiment of my invention, it will be understood that minor changes may be made without departing from the spirit thereof as defined in the claims.

Having fully described my invention, what I claim, is:

1. A cap having a body portion, a fulcrum supported in a position outside, and remote from the body portion, a cover pivoted on the fulcrum so the cover may be seated on the body portion, a tension spring normally holding the cover seated, and a spring buffer balancing the spring tension when the cover is farthest from its seat; the line of action of the tension spring lying between the fulcrum and the body portion when the cover is seated, and on the opposite side of the fulcrum when the cover is farthest from its seat.

2. A cap having a body portion, a fulcrum supported in a position outside, and remote from the body portion, a cover pivoted on the fulcrum so the cover may be seated on the body portion, a tension spring for normally holding the cover seated, and a buffer for counteracting the spring tension when the cover is farthest from its seat; the line of action of the tension spring lying between the fulcrum and the body portion when the cover is seated, and on the opposite side of the fulcrum when the cover is farthest from its seat.

3. A cap having a body portion, lugs projecting outwardly from the body portion, a fulcrum supported in said lugs remote from the body portion, a cover arranged for seating on the body portion, lugs projecting outwardly from the cover to engage the said fulcrum, a tie member joining the body lugs interjacent the body and the fulcrum, a second tie member joining the cover lugs interjacent the cover and the fulcrum, and a spring tensioned between the two tie members for normally keeping the cover seated; the line of action of the spring lying between the fulcrum and the body portion when the cover is seated, and on the opposite side of the fulcrum when the cover is farthest from its seat.

4. A cap having an annular seat portion, an annular sealing member substantially concentric with, and arranged to contact, the said seat, the annular area of the sealing member being greater than the annular area of the seat, so as to form cheek portions on the sealing member when pressure is applied to force the sealing member on to the seat, a fulcrum supported in a position outside and remote from the seat portion, a cover pivoted on the fulcrum, the cover retaining the sealing member, a tensionable spring for normally holding the cover in the seated position, and a spring buffer balancing the spring tension when the cover is farthest from the seated position, the line of action of the tensionable spring lying between the fulcrum and the seat when the cover is in the seated position, and on the opposite side of the fulcrum when the cover is farthest from the seat.

In testimony whereof, I sign my name hereto.

WILFRID HEUSSER.