Jan. 16, 1951 K. LERSTRUP 2,538,370

MEANS FOR CONTROLLING ELECTRIC ARCS

Filed Feb. 5, 1947 2 Sheets-Sheet 1

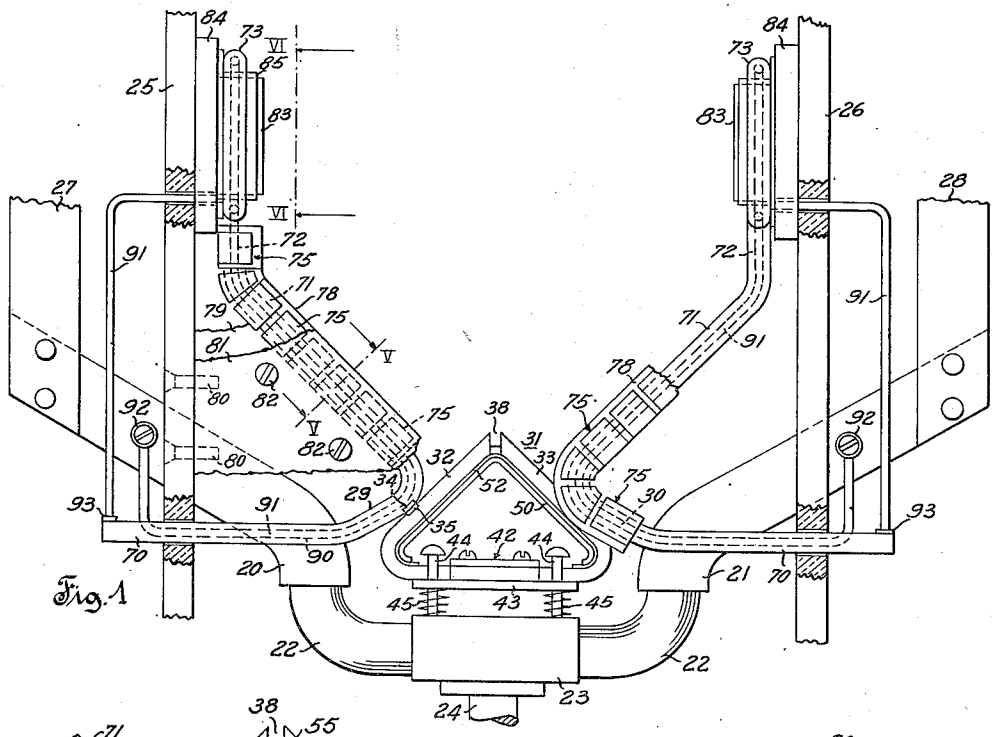

Fig. 1

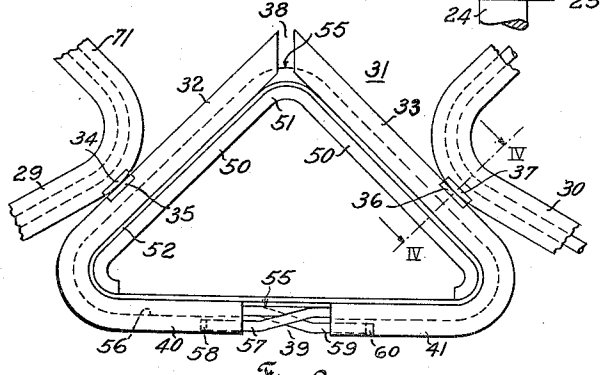

Fig. 2

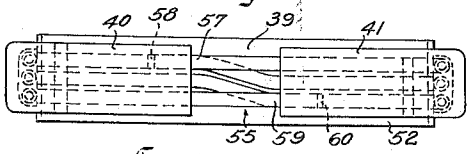

Fig. 3

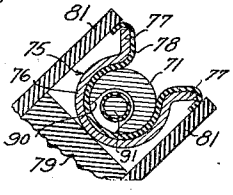

Fig. 5

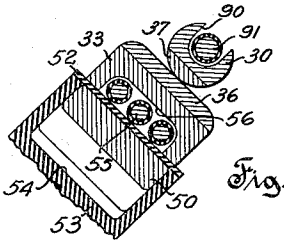

Fig. 4

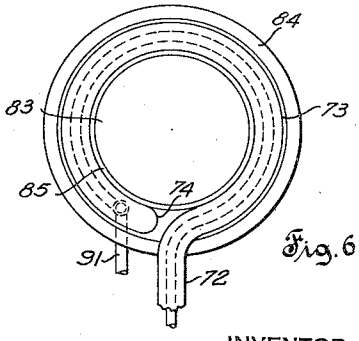

Fig. 6

INVENTOR
Karl Lerstrup
BY
George M. Albrecht
ATTORNEY

Jan. 16, 1951 K. LERSTRUP 2,538,370

MEANS FOR CONTROLLING ELECTRIC ARCS

Filed Feb. 5, 1947 2 Sheets-Sheet 2

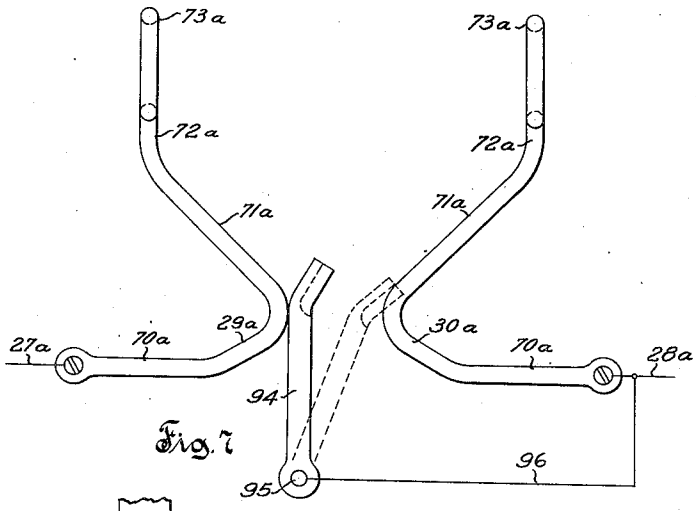

Fig. 7

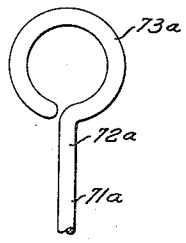

Fig. 8

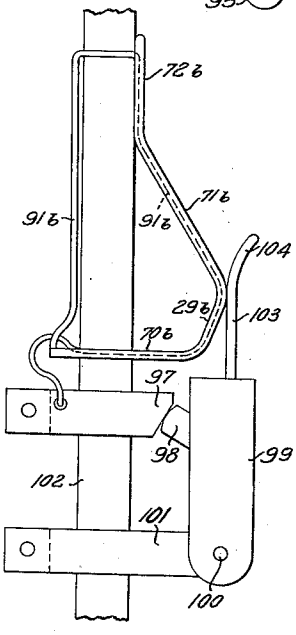

Fig. 9

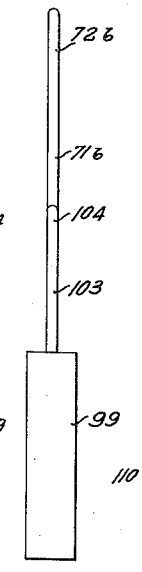

Fig. 10

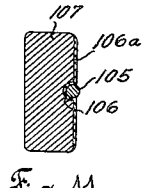

Fig. 11

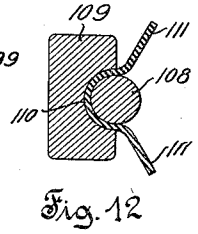

Fig. 12

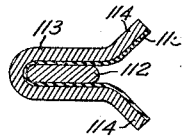

Fig. 13

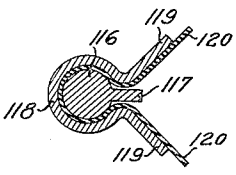

Fig. 14

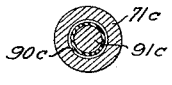

Fig. 15

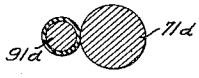

Fig. 16

INVENTOR
Karl Lerstrup
BY
George M. Albrecht
ATTORNEY

Patented Jan. 16, 1951

2,538,370

UNITED STATES PATENT OFFICE

2,538,370

MEANS FOR CONTROLLING ELECTRIC ARCS

Karl Lerstrup, Milwaukee, Wis., assignor to Allis-Chalmers Manufacturing Company, Milwaukee, Wis., a corporation of Delaware

Application February 5, 1947, Serial No. 726,587

4 Claims. (Cl. 200—147)

1

This invention relates to the control of electric arcs and more particularly to the control of arcs on arc runners and arcs formed by the opening of electric switches. The principal object of the invention is the provision of new and improved methods of and means for controlling electric arcs, and new and improved electric switches.

A more specific object is the provision of new and improved ways of controlling an electric arc so that the arc will be rapidly moved and rapidly extinguished. To attain that object it is necessary that the incipient arc be caused to move in a desired direction, and the established arc be caused to move and move rapidly in a desired direction. It is a further object to attain these results without the use of the usual blowout coils or magnets and in a more efficient way.

Other objects will appear as the description of the invention proceeds.

The novel features of the invention and how the objects are attained will appear from this specification and the accompanying drawings showing several embodiments of the invention and forming a part of this application, and all these novel features are intended to be pointed out in the claims.

In the drawings:

Fig. 1 is a side elevation, partly fragmentary, of apparatus embodying the invention, this apparatus including a circuit breaker provided with arc runners;

Fig. 2 is a side elevation, on an enlarged scale, of a detail of the movable arcing contact used in the embodiment of Fig. 1, showing its relation to the relatively stationary arc runners fragmentarily shown;

Fig. 3 is a bottom view of the movable arcing contact shown in Fig. 2;

Fig. 4 is a section, on an enlarged scale, taken on the line IV—IV of Fig. 2, looking in the direction of the arrows;

Fig. 5 is a fragmentary section, on an enlarged scale, taken on the line V—V of Fig. 1;

Fig. 6 is a fragmentary view of a detail of Fig. 1 looking through the plane VI—VI in the direction of the arrows;

Fig. 7 is a side elevation, partly schematic, of another embodiment of the invention in the form of a circuit breaker;

Fig. 8 is a view of an end of one of the arc runners of Fig. 7 taken at right angles to Fig. 7;

Fig. 9 is a side elevation, partly schematic, of another embodiment of the invention in the form of a circuit breaker;

2

Fig. 10 is a front elevation of the circuit breaker shown in Fig. 9; and

Figs. 11, 12, 13, 14, 15 and 16 are cross-sectional views of respectively different arc runners embodying the invention.

Referring first to Figs. 1 through 6, the circuit breaker here shown comprises relatively stationary main contacts 20, 21 adapted to be bridged by a relatively movable main contact 22, the latter being held by a block 23, which may be moved toward and away from the relatively stationary contacts 20, 21 by an operating rod or member 24.

The stationary main contacts 20, 21 may be supported from insulating supports 25, 26 in any suitable way, and may be connected to conductors 27, 28, respectively, forming part of the circuit to be controlled. The construction and arrangement of the main contacts 20, 21, 22 is not material as far as the present invention is concerned.

The circuit breaker further comprises relatively stationary arcing contact portions 29, 30 adapted to be abuttingly engaged by a relatively movable arcing contact 31. The contact 31 is here shown as of inverted heart-shaped or generally triangular form, the triangle having an apex disposed between the relatively stationary arcing contacts 29, 30, with sides 32, 33 adapted to engage the contacts 29, 30. The contacts 29, 30, 31 may be made of copper or any other suitable metal and, if desired, may be provided at the places of engagement with insets 34, 35 and 36, 37 of any suitable metal having more desirable contact qualities than the arcing contacts 29, 30, 31.

The stationary and movable contact portions 29 and 32 are so constructed and arranged that on the arc-trailing side of the place of engagement, that is, on that side of the place of engagement where the portions carry current to and from the arc, they make an angle of substantially less than 90° and desirably less than 60°. The same is true with respect to the portions 30, 33.

The apex of the triangular contact 31 has a split 38, and, as may be seen in Figs. 2 and 3 the side of the triangular contact opposite the apex also has a split 39 dividing that side into two parts 40, 41, but unless it is desired to increase the magnetic effect of current flowing in the triangular contact 31, as will appear, the split 39 may be omitted and the side portions 40, 41 made integral.

The contact 31 may be supported and moved

in any suitable way. As here shown the composite side 40—41 is fastened by an insulating clamp 42 to an insulating support 43 through which freely pass a pair of headed studs 44, one pair on each side of the composite side 40—41. The studs 44 are fastened in the block 23 and springs 45 may be provided for biasing the support 43 to the position in which the insets 35, 36 are in engagement with the insets 34, 37. The lost motion connection provided by the studs 44 and support 43 permits the springs 45 to maintain the contact 31 in engagement with the contacts 29, 30 after the bridging member 22 has been moved out of engagement with the contacts 20, 21.

Desirably, a member of magnetic material 50, here shown as having two flat portions joined at 51, is disposed within and complementary to the inside surfaces of the sides 32, 33 of the contact 31. The member 50 is here shown as insulated from the contact 31 by an insulating member 52, here shown as covering the entire inside surface of the contact 31.

The member of magnetic material 50 may be laterally supported in any suitable way, as by an insulating block 53 shown in Fig. 4 but omitted in Figs. 1, 2 and 3 to more clearly show the otherwise hidden parts. The block 53 may be of generally triangular form complementary to the inside surface of the insulating members 52 and fastened thereto. The block 53 has a channel 54 for receiving the magnetic member 50.

When the split 39 is used, the parts 40 and 41 may be electrically connected by an insulated conductor 55 disposed in a recess 56 in the portions 32, 33, 40, 41 of the triangular contact 31. One bared end 57 of the conductor 55 is disposed in a hole 58 in the portion 40, radially outside of the recess 56, and the other bared end 59 of the conductor 55 is disposed in a hole 60 in the portion 41. The ends 57, 59 are soldered or otherwise suitably fastened and electrically connected in the respective holes 58, 60. The conductor 55 is here shown as so constructed and arranged that it makes three turns from the end 57 to the end 59. From the end 57 the conductor goes to the level of the recess 56, makes a turn in the uppermost position, as viewed in Fig. 3, then crosses to the central position, makes a turn, then crosses to the lowermost position, and makes a turn to the end 59. It will be apparent that a conductor making any other desired number of turns may be used.

The portion 29 of the stationary arcing contact is here shown as integral with a generally horizontal portion 70 which may be electrically immediately connected to the contact 20 or the conductor 27, or it may be mediately connected as will appear. The portion 29 is also here shown as integral with an arc runner portion 71 which extends upwardly at an angle toward the left as viewed in Figs. 1 and 2.

The portion 71 of the arc runner is here shown as joined to a generally vertically extending portion 72 which in turn is shown as joined to an eye or loop 73 as may be seen in Fig. 6. The loop 73 is here shown as substantially circular but having a terminal end 74 spaced from the beginning of the loop. The portions 70, 29, 71, 72 and 73 may be of circular section or other desired section, and they may be of solid section or they may be hollow or preferably have a continuous longitudinally extending recess in the rear thereof as will appear.

Disposed about the arc runner and also about the portion 29 is magnetic material here shown as separate, longitudinally spaced sections 75, the cross-sectional form of which may be seen in Fig. 5. As here shown the sections 75 are of clip form having a body 76 extending more than 180° around the conductor in question, in Fig. 5 the arc runner portion 71. The sections 75 are here shown as provided with outwardly flaring wings 77. The sections 75 may be insulated from the respective conductor portions with which they are associated by insulating material 78. Thus, the sections 75 comprise a plurality of bodies of magnetic material disposed alongside of and in laterally confronting relation to the arc runner 71, and are so arranged that the arc runner 71 extends in either direction past the sections 75.

If desired the portion 29 and that part of the portion 70 at the right of support 25, and the arc runner portions 71, 72 may be backed by a suitably shaped insulating block 79 fastened to the support 25, as by screws 80, and may be laterally supported by insulating plates 81 fastened to the block 79 as by screws 82. The parts 79, 81 are fragmentarily shown in the left half of Fig. 1 and entirely omitted in the right half, for the sake of clarity.

Disposed within the loop 73, a magnetic core 83 is here shown, which core may have a flange 84. The loop 73 is insulated from the core 83 and flange 84 by a layer of insulating material 85. The flanged core is supported in any suitable way from the support 25.

As hereinbefore mentioned the arcing contact portion 29 and the arc runner 71, including also the arc runner portions 72, 73, may be provided with a longitudinally extending recess 90. The recess 90 is clearly shown in the portion 71 in Fig. 5, and in the portion 30 (corresponding to the portion 29) in Fig. 4.

Referring again to the left side of Fig. 1, disposed in the recess 90 is an insulated conductor 91, one end 92 of which is mechanically and electrically connected to the contact 20, and extends in the recess 90 in the portion 70, 29, 71, 72, 73 and emerges from the portion 73 at a place spaced somewhat from the end 74, and has its other end 93 mechanically and electrically connected to the portion 70. Instead of having the insulated conductor 91 in a slot or recess 90, it may be disposed, as in the case of conductor 91*c*, Fig. 15, in a longitudinal hole 90*c* in a runner 71*c* or analogous part. On the other hand the runner or analogous part may be of solid section and the auxiliary conductor may be disposed alongside such construction being shown in Fig. 16 where 71*d* is a runner and 91*d* is the insulated auxiliary conductor. The construction comprising a slot or recess is preferred.

The right side of Fig. 1 is the same as the left side hereinbefore described except of course that the conductor 91 has its end 92 connected to the contact 21. In the left side of Fig. 1 some of the lower clips 75 have been broken away, whereas in the right side of Fig. 1 some of the upper clips 75 have been broken away to show otherwise hidden parts. If desired, the usual arc barriers (not shown) may be provided between the runners 71.

The operation of the embodiment of Figs. 1 through 6 is as follows. Assume that current is flowing from the conductor 27 to the conductor 28 through the contact 20, bridging member 22 and contact 21, and that the rod 24 is moved downward thereby interrupting the path for cur-

rent through the bridging member 22. Current then continues to flow from point 92 through conductor 91 to point 93, through portion 70 through portion 29 across contact points 34, 35 downward through portion 32 through portion 40 to end 57 of conductor 55, through conductor 55 to the end 59 thereof, thence through portion 41, then upwardly through portion 33 to contact point 36 across to point 37 downward through portion 39, through portion 70, and from terminal 93 through conductor 91 to terminal 92 and conductor 28.

By reason of the acute angle made by the parts of the portions 29 and 32 just below the contact points 34, 35, that is, on the arc-trailing side of these points, and the fact that the current flow is in opposite directions in these parts, an intense magnetomotive force is provided in the space defined by that angle. This magnetomotive force is multiplied, in the embodiment of Fig. 1, by the conductor 91, the current in which it is collateral to and in the same direction as that in the portion 29, and is further multiplied by the conductor 55, the current in which it is collateral to and in the same direction as in the portion 32. The magnetic flux produced by the magnetomotive force is multiplied by the provision of the magnetic members 75 and the magnetic member 50, which members greatly reduce the magnetic reluctance of the flux path around the portion 29 (and the conductor 91 if present) and similarly greatly reduce the reluctance of the flux path around the portion 32 (and the conductor 55 if present). What has been stated applies as well to the similar parts on the right side of Fig. 1.

Accordingly, when the contact 31 is moved downward, disengaging the contact points 35, 36 from the points 34, 37, the incipient arcs formed at the places of disengagement are being powerfully acted on by the magnetic fluxes hereinbefore referred to whereby the arcs are caused to move upward, the lefthand arc continuing upward with its terminals on the lefthand runner 71 and the portion 32 respectively, and the righthand arc continuing upward with its terminals on the portion 33 and the righthand runner 71 respectively.

The right and lefthand arcs move upward rapidly and leave the portions 32, 33, uniting at the middle into a single arc extending from the lefthand runner 71 to the righthand runner 71. This single arc, and especially the foot points or terminals thereof, is powerfully acted on by the magnetic flux produced by the current in the arc runners 71 at the trailing side of the arc terminals, causing the arc to move rapidly upward. If the arc has not been extinguished by the time its terminals reach the loops 73, the terminals will be caused, by the magnetic flux produced by the current in the loops at the trailing side of the arc terminals, to move along the loops. When the arc terminals reach the ends 74, the terminals will jump to the beginnings of the loops 73 and again run around the loops until the arc is extinguished. It will be apparent that the arc terminals will, accordingly, not remain at one point, and severe burning of the arc runners and especially the ends of the arc runners is prevented.

The various parts of magnetic material hereinbefore described serve not only to reduce magnetic reluctance but to aid in dissipation of heat produced by the arc. Sectionalizing that part of the magnetic material comprised in the clips

75 prevents current from following the magnetic material if the arc should burn to one of the clips.

Referring now to the embodiment of Figs. 7 and 8, there is here shown a switch comprising a movable member 94 swingable about a pivot 95. The movable member 94 is shown in closed position in which it engages a conducting portion 29*a* continuing upwardly as an arc runner 71*a*. It will be noted that the angle defined between the contact 94 and portion 29*a* is an acute angle as hereinbefore described with reference to the portion 29 and the contact portion 32 of Fig. 1. The movable member 94 is connected by a conductor 96 to the circuit conductor 28*a*, and when the movable member 94 is moved to the dotted line position an arc is first drawn between the portion 29*a* and the member 94, the righthand terminal of the arc being then transferred to the righthand runner 71*a*. The arc then rises along the runners 71*a* and if not sooner extinguished continues on the loops 73*a* until extinguished.

In Figs. 7 and 8 parts corresponding to similar parts in Fig. 1 bear the same reference numerals with the suffix *a*, but in Figs. 7 and 8 the conducting parts are of solid section and no auxiliary conductors, such as 55 and 91 of Fig. 1, are provided. Also no magnetic material constructed and arranged for reducing magnetic reluctance is provided. A construction of the type shown in Figs. 7 and 8 may be employed where the operating requirements are met thereby.

Figs. 9 and 10 show a switch comprising a stationary main contact 97 with which a movable main contact 98 is cooperable. The movable contact 98 is shown as carried by a member 99 pivoted at 100 to a terminal 101. The contact 97 and terminal 101 may be carried in any suitable way by an insulating support 102. The member 99 carries an arcing contact 103 engageable with a relatively stationary arcing contact portion 29*b*. Here too the angle defined between the portion 29*b* and the contact 103 is an acute angle. Above the point of engagement the contact 103 may be provided with an outwardly bent portion 104 of any desired length. The contact 103 may be made flexible, constructed and arranged in any way so that it will leave engagement with the contact portion 29*b* after the main contacts 97, 98 are opened.

The portion 29*b* is continued upwardly as an arc runner 71*b* which as here shown is terminating in a vertical portion 72*b* but unlike these similar parts in Figs. 1 and 7, no loop is provided at the end of the portion 72*b*. In the embodiment shown in Fig. 9, the portions 70*b*, 29*b*, 71*b* and 72*b* are provided with longitudinal recesses in which, as in the embodiment of Fig. 1, a conductor 91*b* is disposed, this conductor having the end emerging from the recess in the portion 70*b* connected to the contact 97 and the other end connected to the portion 70*b*. The effect is the same as described in connection with Fig. 1.

Fig. 11 shows a cross-section of an arc runner 105 which is held by insulating enamel 106 or other suitable material in a longitudinal groove or recess in a magnetic member 107 of any desired suitable cross-section. The arc runner 105 may, if desired, be made of such small cross-section that it would be inadequate to withstand the heat of the arc and/or not mechanically stiff enough to be desirably self-sustaining. When so designed, the arc runner 105 may carry an arc current capable of generating a quantity of heat in the arc runner greater than

the heat required for fusing the arc runner. However, since the runner 105 is mechanically supported by and in heat transfer relation to the magnetic member 107, it need not be self-sustaining and the heat of the arc will be dissipated and, both because of its small diameter and because the member 107 is magnetic the reluctance of the path around the runner will be of low value. Insulating enamel 106a may also be applied to the front surface of the member 107.

In general, irrespective of the particular embodiment of Fig. 11, it is advantageous to make the cross-section of the arc runner as small as possible because the magnetic flux path around the runner is decreased. Also, the mechanical force of the magnetic field produced by current in the runner and acting on the arc is proportional to the square of the current, and the force at the surface of the runner, which is of greatest importance, is inversely proportional to the length of the shortest magnetic path around the runner. Thus it is advantageous to use an arc runner of as small, circular cross-section as possible, and, in addition, to increase the permeability of the flux path around the runner. Whether or not the magnetic material used to increase the permeability of the flux path functions to dissipate heat from the runner, it can be constructed and arranged to stiffen and mechanically strengthen the runner.

Fig. 12 shows a cross-section of an arc runner 108 disposed in a longitudinal groove or recess in a member 109 of magnetic material. A member 110 of self-sustaining insulating material may be interposed between the runner 106 and the surface of the groove, the member 109 and insulating material 110 being cemented together in any suitable way. The member 110 may be provided with outwardly flaring wings 111 to protect the member 109 from the arc.

Fig. 13 shows a cross-section of an arc runner 112 of flat cross-sectional form which may provide a desirably large cross-sectional area. Disposed about the runner 112 is a clip 113 of magnetic material conforming to the outline of the runner for most of its circumference and having outwardly flaring wings 114. A layer of insulating material 115 covering the inside surface of the clip 113, 114 is provided. This combination provides a runner 112 of desired larger cross-sectional area and at the same time a flux path around the runner having a low reluctance.

Fig. 14 shows a cross-section of a runner 116 of generally circular cross-section having a longitudinally extending lateral extension or rib 117 here shown as of generally rectangular cross-sectional outline. Disposed about the runner 116, 117 is a clip 118 of magnetic material conforming generally to the outline of the runner for most of its circumference and having outwardly flaring wings 119. The runner may be of sufficient cross-sectional area to provide for cooling and due to this factor and/or due to the presence of the rib 117 is of sufficient mechanical strength and stiffness without the clip 118, the latter serving, however, to reduce the magnetic reluctance of the flux path around the runner. Self-sustaining insulating material 120 protects the surface of the wings 119 and is interposed between the clip proper 118 and the runner 116.

From the foregoing it will be apparent to those skilled in the art that the illustrated embodiments of the invention provide new and improved methods of and means for controlling electric arcs and new and improved electric switches, and

accordingly accomplish the objects of the invention. On the other hand, it will also be obvious to those skilled in the art that the illustrated embodiments of the invention may be variously changed and modified, or features thereof, singly or collectively, embodied in other combinations than those illustrated, without departing from the spirit of the invention, or sacrificing all of the advantages thereof, and that accordingly the disclosure herein is illustrative only, and the invention is not limited thereto.

It is claimed and desired to secure by Letters Patent:

1. An arc runner comprising, a continuous conductor means forming a path for a movable terminal of an electric arc and means for reducing the magnetic reluctance of the flux path around said conductor means with respect to magnetic flux generated by current flow in said conductor means, said reluctance reducing means including a plurality of bodies of magnetic material disposed opposite the terminal of the arc alongside of and in laterally confronting relation to said conductor means, said conductor means extending past said magnetic bodies, the adjacent said bodies being spaced from each other longitudinally with respect to said conductor means for substantially restricting said arc to said conductor means during movement of said arc terminal.

2. An electric switch, comprising: arcing contacts engageable at a given place of contact and relatively movable away from each other to strike an electric arc at said place; means for increasing the magnetomotive force acting on the arc at the trailing side thereof; at least one of said contacts forming an arc runner for a movable terminal of an electric arc, said runner including means for continuously shifting the arc to shift the spot of junction between the arc and said arc shifting means while the arc exists, said arc shifting means comprising a substantially circular conducting loop at the end of said runner; and means for reducing the magnetic reluctance of the flux path around said runner with respect to magnetic flux generated by current flow in said runner.

3. An electric switch, comprising: arcing contacts engageable at a given place of contact and relatively movable away from each other to strike an electric arc at said place; means for increasing the magnetomotive force acting on the arc at the trailing side thereof; at least one of said contacts forming an arc runner for a movable terminal of an electric arc, said runner including means for continuously shifting the arc to shift the spot of junction between the arc and said arc shifting means while the arc exists, said arc shifting means comprising a substantially circular conducting loop at the end of said runner; and means for reducing the magnetic reluctance of the flux path around said runner with respect to magnetic flux generated by current flow in said runner, said reluctance reducing means including a plurality of bodies of magnetic material disposed opposite the terminal of the arc alongside of and in laterally confronting relation to said runner, said runner extending past said magnetic bodies, the adjacent said bodies being spaced from each other longitudinally with respect to said runner for substantially restricting said arc to said runner during movement of said arc terminal.

4. Electric arc extinguishing means, comprising: means for lengthening the arc including an

arc runner providing a path along which the arc can move toward the end of the runner as the arc is lengthened, said runner having an end comprising a substantially circular conducting loop for supplying a magnetic field to continually shift the spot of junction between the arc and said loop while the arc exists; and magnetic means positioned within said loop for strengthening said magnetic field.

KARL LERSTRUP.

REFERENCES CITED

The following references are of record in the file of this patent:

UNITED STATES PATENTS

Number	Name	Date
701,577	Klein	June 3, 1902
989,487	Creighton	Apr. 11, 1911
1,110,374	Bowie, Jr.	Sept. 15, 1914
1,151,726	Schweitzer et al.	Aug. 31, 1915
1,531,667	Legg	Mar. 31, 1925
1,580,415	Crabbs et al.	Apr. 13, 1926
1,623,531	Dubilier	Apr. 5, 1927
1,623,851	Paul	Apr. 5, 1927
1,747,460	Twiss	Feb. 18, 1930
1,796,160	Paul	Mar. 10, 1931
1,799,720	Zingg	Apr. 7, 1931

FOREIGN PATENTS

Number	Country	Date
71,393	Switzerland	Jan. 3, 1916
114,061	Germany	Oct. 10, 1900
368,645	Great Britain	Mar. 10, 1932
514,100	Germany	Feb. 12, 1931