(No Model.)

2 Sheets—Sheet 1

H. K. RUBY.

SIGNAL LANTERN.

No. 578,267.

Patented Mar. 2, 1897.

Fig. 1.

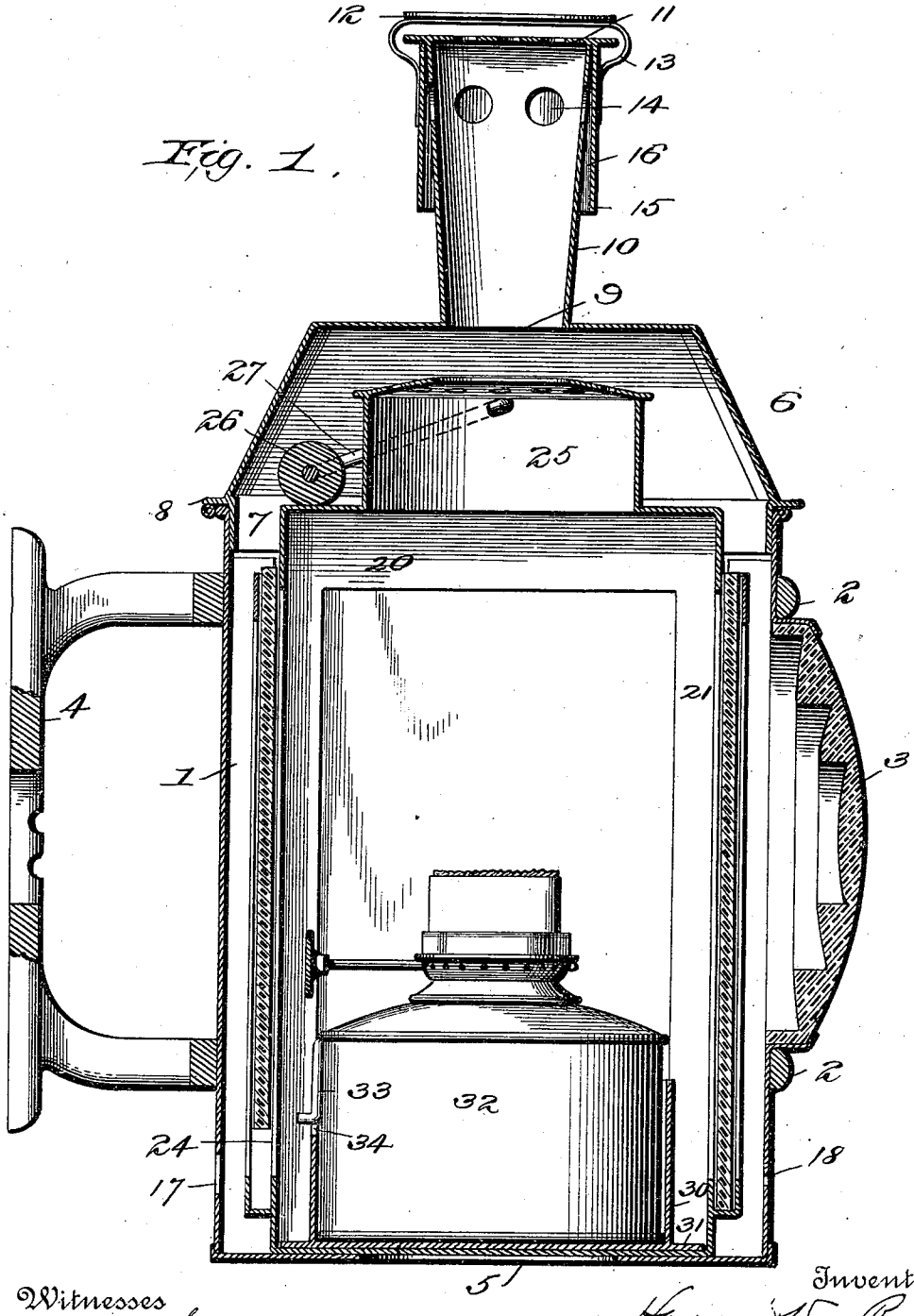

Witnesses

Wm. J. Sheidew

Alfred T. Gage.

Inventor

Harry K. Ruby

by W. G. Henderson

Attorney

THE NORRIS PETERS CO., PHOTO-LITHO., WASHINGTON, D. C.

(No Model.)

2 Sheets—Sheet 2.

H. K. RUBY.

SIGNAL LANTERN.

No. 578,267.

Patented Mar. 2, 1897.

Fig. 2.

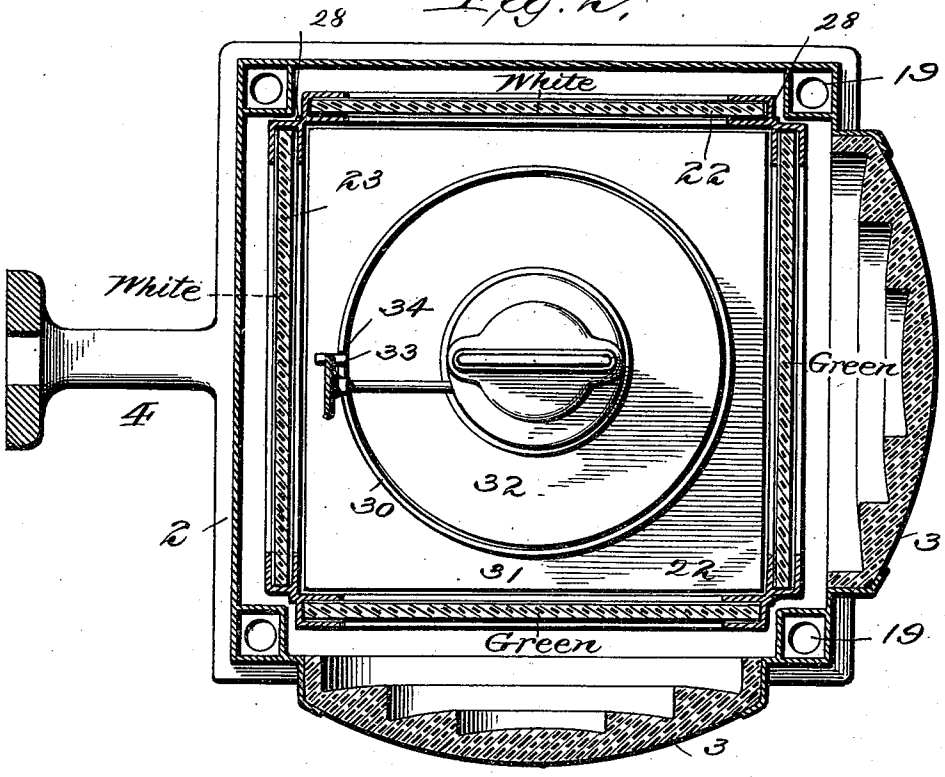

Fig. 3.

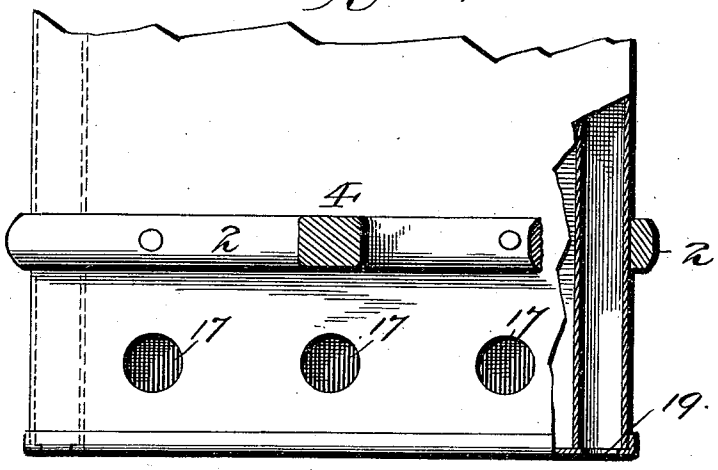

Witnesses

Wm. J. Sheidell

Alfred T. Gage

Inventor

Harry K. Ruby

by W. G. Henderson

Attorney

THE NORRIS PETERS CO., PHOTO-LITHO., WASHINGTON, D. C.

UNITED STATES PATENT OFFICE.

HARRY K. RUBY, OF COLUMBIA, PENNSYLVANIA, ASSIGNOR OF TWO-THIRDS TO WALTER B. RUBY, OF YORK, PENNSYLVANIA, AND EMERSON J. RUBY, OF CHICAGO, ILLINOIS.

SIGNAL-LANTERN.

SPECIFICATION forming part of Letters Patent No. 578,267, dated March 2, 1897.

Application filed November 23, 1895. Serial No. 569,921. (No model.)

To all whom it may concern:

Be it known that I, HARRY K. RUBY, a citizen of the United States, residing at Columbia, in the county of Lancaster and State of Pennsylvania, have invented certain new and useful Improvements in Signal-Lanterns; and I do declare the following to be a full, clear, and exact description of the invention, such as will enable others skilled in the art to which it appertains to make and use the same, reference being had to the accompanying drawings, and to the figures of reference marked thereon, which form a part of this specification.

My invention relates to signal-lanterns intended for use more particularly on locomotives, railway-trains, switches, and analogous uses; and it has for its object to provide such a lantern which will be unaffected by winds and stormy weather and which may be readily shifted or adjusted so as to display different lights.

It has, further, for its object to provide improved means for supplying air to the lantern, so as to maintain combustion and a bright light and to effectually carry off the products of combustion.

It has, further, for its object to provide improved means for securing the lantern proper inside of the case provided for it.

To the accomplishment of the foregoing and such other objects as may hereinafter appear the invention consists in the construction and also in the combination of parts hereinafter particularly described and then sought to be specifically defined by the claims, reference being had to the accompanying drawings, forming a part hereof, and in which—

Figure 1 is a vertical section through the lantern and its case, with the lamp shown in full lines. Fig. 2 is a horizontal section through said parts on a line above the lamp, and Fig. 3 is a rear elevation with parts broken away and some in section.

In the drawings the numeral 1 designates the case for the lantern, which preferably is formed of metal and which will be strengthened by bands 2, extending transversely across the case at the top and bottom. The case is provided in its front and on one side with the bull's-eyes 3 and has at its rear the bracket 4, by means of which it may be suspended from the locomotive or other support. It is provided in its bottom with a central opening 5, through which access may be had to the interior of the case for the purpose of cleaning out the same when the lantern is removed. It is provided at its top with a hinged cover 6, which has a depending flange 7 to fit inside the case and an outwardly-extending flange 8 to fit on the top edge of the case, so as to form a close joint for the purpose of excluding rain and the elements. The cover is made with converging side walls and flat top and in its center is formed with an opening 9 for the escape of the products of combustion, and above the opening rises a chimney 10 to carry off the products and create a proper draft through the case. The top of the chimney is provided with a perforated cap 11 for the escape of the products, and above which is supported a shield 12 by means of the arms 13, so as to prevent the wind blowing down the chimney and to protect the same from the inclemencies of the weather. The upper portion of the chimney is provided in its walls with apertures 14, which open into a downwardly-extending channel 15, formed by the depending hood 16, so that a proper draft will be created, so as to facilitate the withdrawal of the products of combustion, said hood also preventing currents of air passing through the openings 14.

The case has formed in the lower portion of the rear walls openings 17 for the admission of air and in the lower portion of its front wall smaller openings 18 for the same purpose, so as to keep the space between the walls of the case and sides of the lantern free of the products of combustion and to create an upward draft of air in the case. The case is also formed in each corner with vertical air-tubes 19, which extend from the bottom of the case up to a point near the upper edges of the case. These air-tubes 19 are closed throughout their length, but open at the bottom and at the top, so that the air may enter from the under side of the case and be discharged at a point near the upper end of the case, so as to furnish a sufficient air-draft to promptly carry

away the products of combustion which may pass from the top of the lantern into the cover of the case. By this arrangement of the air-pipes the air is delivered into the case at the point where it will be most effective in carrying off the products of combustion.

The lantern proper is designated by the numeral 20, and is preferably made of the same general outline or configuration as the case in which it sets. The lantern is formed of the metal frame 21, provided with the glass sides 22, two of which may be of white glass and one of green glass, and on one side is provided with a glass slide 23, which may be a white glass or a colored glass (either red or green) as desired or necessary. The side 23 is adapted to be withdrawn from the lantern-frame, so that a different-colored glass may be inserted in place of the one withdrawn.

Beneath one of the glasses of the sides of the lantern, preferably beneath the sliding glass, is left an open space 24, so as to make communication between the inside of the lantern and the space between its outside and the inside wall of the case, in order that air may pass from the space in the case around the lantern into the interior of the lantern, thereby affording the necessary supply of air to supply the lamp and maintain free combustion and a bright flame. This space 24 preferably extends across the entire width, or practically so, of the side of the lantern, and usually it will be opposite to the opening 17 in the rear wall of the case, so that a direct draft will be provided for the air from the outside of the case through its wall and into the lantern, but it is obvious that when the lantern is changed in its position within the case said space will be at a different side of the case, but still owing to the width of the space an ample supply of air will be furnished to maintain the flame.

The dome 25 of the lantern has its top perforated and extends up into the space formed by the cover of the case for the lantern and is located so as to be directly under the chimney 10 in order that the air supplied by the air-tubes 19 will pass around the dome and over the top thereof and thence into the chimney, thus effectively carrying off the products of combustion and heated air as the same pass from the lantern to its dome.

The lantern is provided with a handle 26, secured by a bail 27 to its top, so that by it the lantern can be lifted from the case and used without the case when necessary, and so also that the lantern may be lifted and changed in its position within the case in order to present the desired colored glass to either one of the bull's-eyes of the case as occasion requires.

The corners of the lantern are formed with recesses 28 to receive the sides of the air-tubes 19, as clearly indicated in Fig. 2 of the drawings, so that the lantern will thus be held in place and prevented from shifting about in the case.

Within the lantern, at its bottom, is set the lamp-socket 30, which is formed with a projecting flange 31, that will bear against the inside walls of the lantern and thus prevent the lamp-socket from shifting about, the socket being otherwise loosely fitted in the lantern, so that it can be readily removed when the lantern is to be changed, or at other times. The lamp 32 fits within this lamp-socket and is prevented from turning therein by means of a projection 33, which fits in the slot 34, formed in the side of the lamp-socket. The lamp is inserted and withdrawn from the lantern through the opening in the side made by lifting the sliding glass at the side.

It will be observed that the air-tubes practically divide the space between the walls of the outside case and the hand-lantern into different compartments, whereby a better upward circulation in said space is obtained than otherwise would be the case. It will also be observed that by taking in the outside air at the bottom of the air-tubes and discharging it into the space of the cover below the dome to the hand-lantern and having the perforations in the top of the dome beneath the chimney to the outside case the air is delivered in the upper part of the outside case where no downdraft will be created in the top of the lantern and in such manner that the products of combustion will be carried more directly into the chimney from the dome of the lantern.

By the construction described a uniformly steady flame is maintained and a bright light is afforded, because the proper quantity of air is admitted and directed to the most effective point by reason of the location and formation of the air-tubes and the air-openings. The light is also protected against strong winds no matter how stormy the weather may be, and sufficient heat is maintained within the case to prevent freezing of any of the parts in the severest weather. I am also enabled to burn ordinary carbon-oil instead of the usual signal or lard oil commonly used in signal-lanterns, and I obtain a better light than is ordinarily obtained by the use of signal-oil in signal-lanterns of other forms.

I have described with particularity the preferred details of construction of the several parts; but it is to be understood that changes can be made in the details without departing from the essential features of my invention.

Having described my invention and set forth its merits, what I claim is—

1. In a signal-lantern, the combination with the outside case formed with vertical air-tubes, each tube extending from the lower to the upper portion of the case and open at top and bottom, of a hand-lantern located in said case and formed with recesses receiving a portion of the vertical air-tubes to hold said hand-lantern in place, substantially as and for the purposes described.

2. In a signal-lantern, the combination of

the outside case having air-inlet openings at its lower portion and provided with a cover 6 having a chimney provided with openings, the hand-lantern with transparent sides and provided with the dome 25 extending up into the cover 6 and having perforations in its top beneath the chimney to the cover, and the vertical air-tubes located between the sides of the hand-lantern and the outside case and communicating at their lower ends with the outside of the case and at their upper ends discharging into the cover of the case below the dome to the lantern, substantially as and for the purposes described.

3. In a signal-lantern, the combination of the outside case formed with air-inlets in its lower portion and provided with a cover 6 having a chimney formed with perforations in its sides and top, a shield extending over the perforations in said top and a depending hood around the perforations in its sides, a hand-lantern located inside said case and having transparent sides and provided with an apertured dome extending up into the cover of the case beneath the chimney to the cover, said dome having imperforate sides, and vertical air-tubes located between the sides of the lantern and sides of the case and communicating at their lower ends with the outside of the case and at their upper ends discharging into the cover of the case below the dome to the lantern, substantially as and for the purposes described.

4. In a signal-lantern, the combination of the outside case having air-inlets at its lower portion and a cover with a chimney, a hand-lantern provided with an apertured dome and transparent sides and inclosed in the case so as to leave a space between the sides of the lantern and of the case extending from the lower to the upper portion of the case, and air-tubes located between the sides of the lantern and outside case and dividing the space at intervals around the lantern, substantially as and for the purposes described.

In testimony whereof I affix my signature in presence of two witnesses.

HARRY K. RUBY.

Witnesses:
WILLIAM H. EYLE,
JOSEPH W. MUMMARE.