No. 765,146. PATENTED JULY 12, 1904.

W. H. MITCHELL.

WEIGHING ATTACHMENT FOR REFRIGERATORS.

APPLICATION FILED DEC. 9, 1903.

NO MODEL.

Fig. 1.

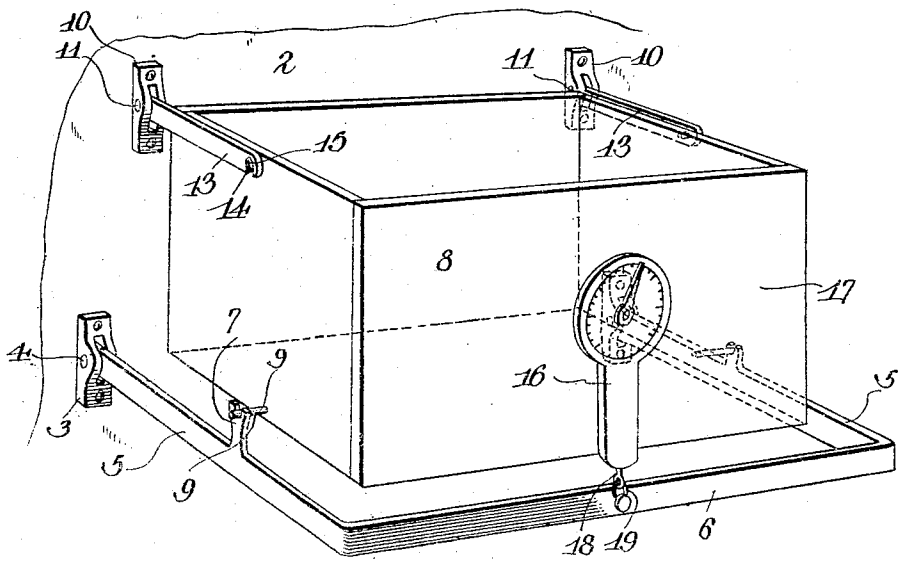

Fig. 2.

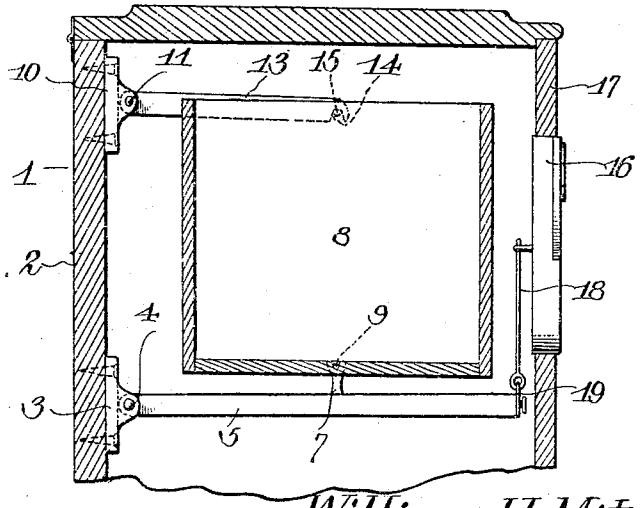

Witnesses

E. F. Stewart

F. A. Elmore.

William H. Mitchell, Inventor.

by C. A. Snow & Co.

Attorneys

No. 765,146. Patented July 12, 1904.

UNITED STATES PATENT OFFICE.

WILLIAM H. MITCHELL, OF ROXBURY, MASSACHUSETTS, ASSIGNOR OF TWO-THIRDS TO ASA H. FIELD AND SAMUEL B. FIELD, OF BOSTON, MASSACHUSETTS.

WEIGHING ATTACHMENT FOR REFRIGERATORS.

SPECIFICATION forming part of Letters Patent No. 765,146, dated July 12, 1904.

Original application filed September 14, 1903, Serial No. 173,146. Divided and this application filed December 9, 1903. Serial No. 184,457. (No model.)

To all whom it may concern:

Be it known that I, WILLIAM H. MITCHELL, a citizen of the United States, residing at Roxbury, in the county of Suffolk and State of Massachusetts, have invented a new and useful Weighing Attachment for Refrigerators, of which the following is a specification.

My invention relates to weighing attachments for use in connection with refrigerators or the like, being a division of an application filed by me September 14, 1903, Serial No. 173,146, and has for its objects to produce a comparatively inexpensive device of this character adapted for ready attachment to the refrigerator and designed in practice to accurately indicate the weight of the contents of the receptacle forming a part of the attachment.

To these ends the invention comprises the novel features of construction and combination of parts more fully hereinafter described.

In the accompanying drawings, Figure 1 is a perspective view of my improved device. Fig. 2 is a vertical transverse section through the same.

Referring to the drawings, 1 designates a refrigerator-box of the usual or any preferred construction, to the rear wall 2 of which or other support there is attached a pair of bearing-blocks 3, having spaced ears receiving horizontal pintles 4, upon which is pivoted to swing in a vertical plane a sustaining member, preferably in the form of a substantially U-shape frame, comprising end bars 5 and a front bar 6, there being provided upon the end bars 5 a pair of oppositely-disposed recessed bearing-ears 7.

8 designates a box-like receptacle situated within the refrigerator and adapted to receive the ice or other material to be weighed. This receptacle, which is sustained wholly by the sustaining member, is provided with pintles or trunnions 9, projecting outward from its ends adjacent to its bottom for engagement with the recessed bearing-ears 7, whereby the receptacle is adapted for a pivotal movement relative to the sustaining member or frame.

Attached to the wall or support 2 is a pair of bearing blocks or members 10, having spaced ears receiving horizontal pintles 11, upon which are pivoted, respectively, a pair of arms or links 13, recessed at their outer ends, as at 14, for engagement with trunnions or analogous devices 15, carried by and projecting outward from the ends of the receptacle adjacent to its top. These arms or links serve in practice, through their engagement with the devices 15, to retain the receptacle in its normally upright position during the weighing operation, or, in other words, they act as swinging guides to prevent tilting of the receptacle as the sustaining member moves downward.

16 designates a spring-balance scale attached to the front wall of the refrigerator or other support 17 and having its vertically-movable beam 18 connected at its lower end by a connecting element 19 with the front bar 6 of the sustaining member. This scale is of ordinary construction except that in the matter of the graduations on the dial, whereon in a given space there is registered just double the amount as in the same space on an ordinary dial. In other words, the scale-pointer will, owing to the weight of the receptacle, its contents falling at the center of beam 5 in registering two pounds, move over the dial the same distance that it would for registering one pound under ordinary circumstances.

From the foregoing it is apparent that when ice or other material is placed in the receptacle the weight of the latter will cause its sustaining member to move downward, thus operating the scale-beam 18, as usual in such devices, and registering the weight of the contents of the receptacle upon the scale-dial. During this operation the receptacle will be prevented from tipping by the members 13 in the manner above explained.

It will be seen that the device is exceedingly simple in construction and inexpensive

to produce, is strong and durable, and adapted for ready attachment, and that in practice it will accurately weigh material placed in the receptacle, and, further, that the space between the receptacle and walls of the refrigerator will insure a free circulation of cold air through the latter, whereby a hygenic condition and a low temperature will be maintained. In attaining these ends it is to be understood that I do not limit myself to the precise details herein set forth, as minor changes may be made therein without departing from the spirit of the invention.

For example, I have herein shown the device as applied for use in connection with refrigerators; but it is to be understood that the same is equally applicable for use in coal-boxes, coal-lifts in mines, bins in stores, and analogous purposes and that such slight changes as might be found necessary in adapting it for these purposes will fall within the scope of the invention.

Having thus described my invention, what I claim is—

In a device of the class described, the combination with a support, of a substantially U-shaped frame pivotally connected therewith and having its end bars provided with recessed ears, a receptacle carrying trunnions pivotally engaging the ears, means for maintaining the receptacle in upright position, and an independently-supported weighing mechanism operatively connected with the frame.

In testimony that I claim the foregoing as my own I have hereto affixed my signature in the presence of two witnesses.

WILLIAM H. MITCHELL.

Witnesses:

MABEL R. HARRIS,

JAMES F. PHELPS.