May 31, 1938. D. M. RAPPORT 2,119,491

ROLLER

Filed March 11, 1937

Fig. 2

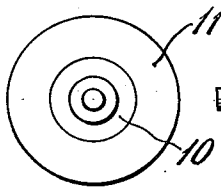

Fig. 1

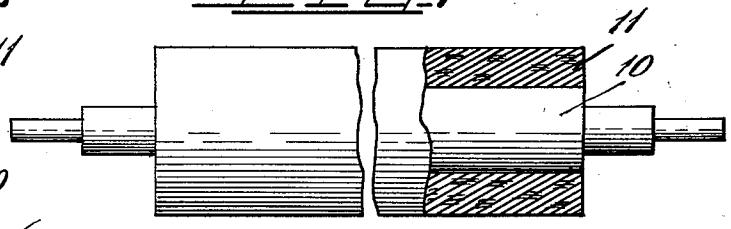

Fig. 4

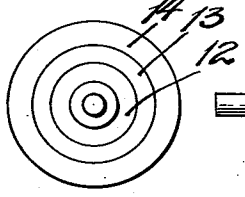

Fig. 3

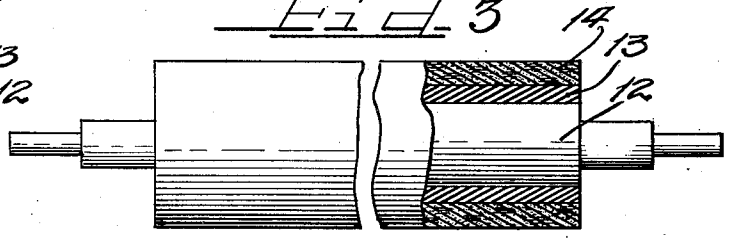

Fig. 5

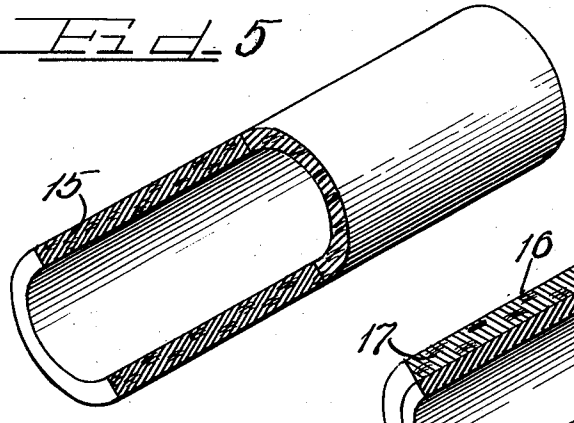

Fig. 6

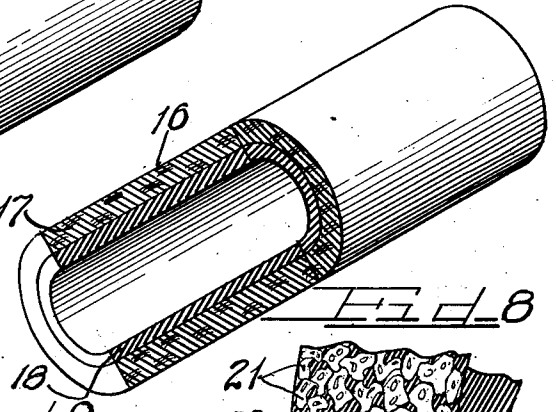

Fig. 7

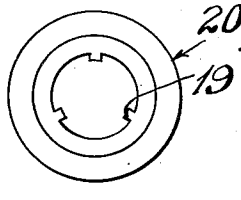

Fig. 9



Fig. 8

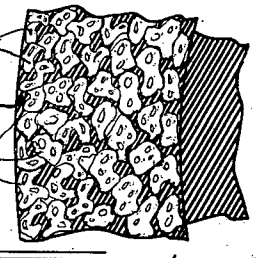

Inventor

David M. Rapport.

by Charles O. Hill Attys.

Patented May 31, 1938 2,119,491

UNITED STATES PATENT OFFICE

2,119,491

ROLLER

David M. Rapport, Chicago, Ill., assignor to Rapid Roller Company, Chicago, Ill., a corporation of Illinois

Application March 11, 1937, Serial No. 130,326

6 Claims. (Cl. 91—67.8)

This invention relates to roller construction and more particularly to a dampening roller for use on a lithographic offset press.

In lithographic offset reproduction, the parts of the plate not bearing the image are dampened with water or a suitable solution to prevent the inking up of these parts of the plate. The moisture applied to the blank spaces of the plate repels the ink, which is of an oil base, from these portions, so that they stay clean. To accomplish this object, dampening rollers are used.

The dampening rollers in general use at present are covered with an absorbent cotton molleton or moleskin, which may be sewn over a metal core having an intermediate jacket of flannel. The purpose of the flannel is to act as a water reservoir to assure a sufficient dampening effect. Due to the fact that dampening rollers built on this principle are very hard, it has recently been proposed to cover the metal core or shaft first with a soft, oil resistant rubber base, over which is placed the flannel jacket and molleton covering, or the molleton covering only.

Some of the disadvantages of the arrangement just described are that a molleton covered roller is quite hard and wears the plates, and also it is very difficult to control the amount of dampening solution deposited on the plates. Another disadvantage is that the molleton covering has to be replaced rather frequently due to the fact that the cotton is compressed and does not carry a sufficient amount of the dampening solution, or the cotton becomes impregnated with the oily ingredients of the ink and its water absorptive capacity is thereby cut down.

I have now found that the molleton covering can be eliminated if the roller is covered with a surfacing layer having both resilience and moderately water absorptive properties. For this purpose, I have used a rubber composition comprising a binder of rubber, either natural or synthetic, or a rubber-like substance, and a filler of a water absorbent material, such as absorptive cotton, unsized paper pulp, leather powder, cork powder, wool flock, powdered natural sponge, wood flour, and the like. By properly compounding a rubber composition containing a water absorbent filler, a surfacing layer or coating can be provided that is both resilient and water absorptive, while at the same time being relatively resistant to deterioration under the action of air, light, and oil.

I have also found that it is particularly advantageous to convert my rubber composition into a sponge rubber surfacing layer, since in that case the fine cellular structure of the surfacing layer increases the water holding capacity of the dampening roller.

It is therefore an important object of this invention to provide a roller, or roller element, of a rubber composition that can be used as the surfacing layer in place of molleton and that possesses both resilience and water absorptive and retentive properties, is relatively oil resistant and can be ground with great accuracy.

It is a further important object of this invention to provide a dampening roller for use on lithographic or offset presses, by means of which the amount of moisture deposited upon the plates can be controlled readily and wear of the lithographic plates greatly reduced.

It is a further object of this invention to provide a dampening roller having a surfacing layer that can be easily cleaned to facilitate the change over from one color to another on the press.

Other and further important objects of this invention will be apparent from the disclosures in the specification and the accompanying drawing.

This invention (in a preferred form) is illustrated in the drawing and hereinafter more fully described.

On the drawing:

Figure 1 is a broken plan view of a roller embodying the principles of this invention, partly in section.

Figure 2 is an end elevational view of the same.

Figure 3 is a broken, plan view, partly in section, of a modified form of roller.

Figure 4 is an end elevational view of the roller of Fig. 3.

Figure 5 is an isometric view of a sleeve, partly in cross section, adapted to be drawn over a shaft or core to provide a roller similar to that shown in Fig. 1.

Figure 6 is an isometric view, partly in section, of a sleeve adapted to be drawn over a shaft or core to form a roller substantially like that shown in Fig. 3.

Figure 7 is an end elevational view of a modified form of sleeve showing ribs for locking the sleeve in place on a shaft or core.

Figure 8 is a greatly enlarged fragmentary cross sectional view of a roller surfacing layer such as that shown in Fig. 6.

Figure 9 is a greatly enlarged fragmentary cross section view of a roller surfacing layer such as that shown in Fig. 3.

As shown on the drawing:

In Figs. 1 and 2, the reference numeral 10 in-

dicates a metal shaft or core, which may suitably be made of steel, brass, or the like, to which is directly secured, as by vulcanizing, a surfacing layer 11 of a rubber composition embodying my invention.

A slightly modified form of construction is shown in Figs. 3 and 4, wherein the core 12 has a layer 13 of soft rubber directly vulcanized thereto, with a surfacing layer 14 of sponge rubber composition vulcanized to said soft or cushion rubber layer 13. Said soft rubber layer 13, instead of being vulcanized, may be secured to the core 12 by means of special rubber cement, or the like.

In Fig. 5 there is shown a sleeve 15 of a rubber composition similar to that of the layer 11. Said sleeve 15 is adapted to be drawn over a core and secured thereon to form a finished roller. In Fig. 6, a sleeve 16 for the same purpose is shown, comprising an outer, or surfacing layer 17 of my rubber composition and an inner cushioning layer 18 of soft rubber for anchorage to the metal core.

In the manufacture of the sleeves illustrated in Figs. 5 and 6, the milled rubber composition may be extruded from a tubing machine, or the sheet of material may be built up on an arbor, wrapped therearound and vulcanized. If necessary the surface of the sleeve may be ground to the proper diameter and the finished sleeves or tubes cut therefrom to the necessary length and pulled over the steel or other metal core. The sleeves may then be cemented or vulcanized to the metal core and, in some instances, the ends of the sleeves may be drawn over the ends of the cores and tied down to prevent the dampening solution from getting between the tube or sleeve and the core. In some instances, the sleeves may be drawn over a core that has already been covered with a soft rubber layer such as the layer 13.

In order to further assure safe anchorage of the sleeve to the metal core, ribs 19 (Fig. 7) may be formed upon the inner surface of a built up sleeve 20. In this case, the metal core is similarly grooved to receive the ribs 19. Said ribs 19 may be made of hard or soft rubber, but preferably of hard rubber, and the ribs may be further vulcanized in place.

The composition used in the surfacing layers, such as the layers 11, 14, 15 and 17, may suitably comprise a binder of rubber, either natural or synthetic, or a rubber-like substance, and a filler of water absorbent properties, such as absorptive cotton flock, unsized paper pulp, leather powder, cork powder, wool flock, artificial silk flock, powdered natural sponge, wood flour, and the like. All of these materials will absorb water and release it on application of pressure. The preferred fillers are absorptive cotton, unsized paper pulp and powdered natural sponge, since these have been found to have the greatest absorptive capacity.

In making up the composition for the surfacing layer, one or more of these various fillers in finely divided state is mixed with the other rubber compounding materials on a regular rubber mill until the filler is uniformly dispersed in the rubber. Preferably a synthetic rubber is used since a synthetic rubber is now available on the market which is relatively resistant to oils and to hydrocarbons that normally cause natural rubbers to swell and deteriorate. One such synthetic rubber is prepared by polymerizing chloroprene, the product being known under the name of "Du Prene". Other rubber compositions may be used, such as the halogenated or hydrohalogenated rubbers, or polymers of butadiene. These synthetic rubbers or rubber reaction products may be compounded and vulcanized in much the same way as in the case of natural rubber. Any suitable rubber accelerator, antioxidant, and/or softener may be added in accordance with the usual practice in the compounding of rubber. Where a sponge rubber is desired, a blowing agent is added. The mixed or milled rubber composition may then be sheeted out on a calender and applied to the metal core in a manner well known to those versed in the art. After the sheet of material has been wrapped on the metal core to the specified diameter, a rubberized or plain woven sheeting is wrapped therearound and the roll vulcanized at the proper temperature and pressure to insure a satisfactory cure. The vulcanization operation can be performed in live steam, under water or in hot air or in a press. After vulcanization has been completed, the roller is cooled down in the vulcanizing equipment in order to obtain a uniform structure that is not too porous, or, in the case of sponge rubber, in order to obtain a fine cellular structure. The wrapper is then removed and the roller is ground, if necessary, to the specified size. In some cases, it is preferable to leave a nap, velvet or grain finish on the surface of the roller, while in other cases it may be desired to polish the surface of the roll to a smooth finish.

The proportion of water absorptive filler material to be used in the surface layer composition varies according to the type of press, or type of printing to be done. In general the rubber composition may comprise from 25 to 75% of rubber and from 75 to 25% of filler, the larger amount of filler being used where the surfacing layer is to carry a larger amount of water. An amount of the filler material equal to from 60 to 75% of the rubber composition is generally preferable. It is, of course, very important that the filler materials be distributed substantially uniformly throughout the rubber composition to insure even dampening.

Where natural sponge is used as the filler, for instance, the sponge is ground or shredded to a particle size such that it will pass through a ten mesh screen, or even as high as a sixty mesh screen. As illustrated in Fig. 8, the proportion of filler to rubber is such that the particles 21 of filler are largely in contact with each other and are held together by the rubber compositon 22 acting in the capacity merely of a binder. A reasonably large surface area of the filler particles is exposed at the surface of the layer, as at 23. The exposed surfaces of the filler particles impart a degree of water absorptiveness that adapts the roller for use as a dampener roller in lithographic or offset presses.

In Fig. 9, there is shown a sponge rubber surfacing layer 24 having flock particles 25 distributed therethrough. The flock found most effective is that made from absorptive cotton, but wool flock or an artificial silk flock, such as rayon, may be used.

While my invention has been particularly described as relating to dampening rollers, it will be understood, however, that rollers of my invention may be also used for other purposes, as in the printing of water colors, in duplicating ink presses, and the like, so that the degree of water absorptiveness will be varied in accordance with the use to which the roller is put.

The hardness or plasticity of the surfacing layer will also depend upon the use to which the

roller is to be put, but in the case of a dampening roller, the hardness should measure between 12° and 28°, preferably from 15° to 25° on a Shore hardness tester, since it is important that the surface of the dampening roller be soft and resilient. By the use of suitable antioxidants, a rubber composition can be made that will not appreciably age or harden over long periods of time. Also, the rubber composition may be so compounded that it will not be attacked by the oily substance or drying oils used in the printing inks and therefore will not swell or become sticky. This is important because a certain amount of the ink in a lithographic roller offset press always works back from the plate to the dampening roller. The resistance of my rubber composition to oil permits my dampening rollers to be washed with a good grade of roller wash, such as naphtha, or a mixture of naphtha and kerosene.

I am aware that many changes may be made and numerous details of construction may be varied through a wide range without departing from the principles of this invention, and I, therefore, do not purpose limiting the patent granted hereon otherwise than necessitated by the prior art.

I claim as my invention:

1. A dampening roller having a metal shaft and a resilient moderately water absorbent surfacing layer secured thereto, said layer being composed of a rubber-like binder having distributed therethrough finely divided particles of a water absorbent material as a filler, some of said filler particles being exposed at the surface of said layer.

2. A dampening roller having a metal shaft and a resilient moderately water absorbent surfacing layer secured thereto, said layer being composed of a rubber-like binder having distributed therethrough from 60 to 75% by weight of finely divided particles of a water absorbent material as a filler, some of said filler particles being exposed at the surface of said layer.

3. A roller having a sponge rubber surfacing layer of fine cellular structure and having a water absorbent filler distributed therethrough.

4. A roller having a sponge rubber surfacing layer of fine cellular structure and having a water absorbent filler distributed therethrough, the rubber being a synthetic rubber resistant to the deteriorating action of oils and hydrocarbons.

5. A dampening roller having a surfacing layer of a synthetic rubber composition and a water absorbent filler, said layer having a hardness of between 12° and 28° on a Shore hardness tester.

6. A dampening roller having a surfacing layer of a synthetic rubber composition and a water absorbent filler comprising a textile flock substantially uniformly distributed therethrough, said layer having a hardness of between 12° and 28° on a Shore hardness tester.

DAVID M. RAPPORT.