US00D550280S

(12) United States Design Patent

Russo et al.

(10) Patent No.: US D550,280 S
(45) Date of Patent: ** Sep. 4, 2007

(54) **STAMP PRESS**

(75) Inventors: **Peter Russo**, Bedford, MA (US); **Bill Cooke**, Warwick, RI (US)

(73) Assignee: **Fiskars Brands, Inc.**, Madison, WI (US)

(**) Term: **14 Years**

(21) Appl. No.: **29/258,111**

(22) Filed: **Apr. 17, 2006**

(51) **LOC (8) Cl.** **18-02**

(52) **U.S. Cl.** **D18/59**

(58) **Field of Classification Search** D18/59, D18/99, 50, 15–20; 83/167, 289, 302, 203, 83/523, 633; 241/169.1, 36, 154, 157, 222, 241/224, 168, 284; D14/240, 433; 101/269, 101/56; 426/87; D8/99; D6/300; D11/78.1; D20/43; 100/297, 269, 369; 412/43; 396/556
See application file for complete search history.

(56) **References Cited**

U.S. PATENT DOCUMENTS

1,801,593	A *	4/1931	Dugdale	101/369
2,034,584	A *	3/1936	Lamb	101/269
D133,663	S *	9/1942	Beason	D20/43
D169,825	S *	6/1953	Schildkraut	D11/78.1
2,972,938	A *	2/1961	Sausele	396/556
3,728,751	A *	4/1973	Nes	412/43
D319,541	S *	9/1991	Stewart	D6/300
6,381,869	B1 *	5/2002	Lunan	100/297
D484,136	S *	12/2003	Ivan et al.	D14/433
D523,249	S *	6/2006	Hoernig	D6/300

* cited by examiner

Primary Examiner—Charles A. Rademaker
(74) *Attorney, Agent, or Firm*—Foley & Lardner LLP

(57) **CLAIM**

We claim the ornamental design for a stamp press, as shown and described.

DESCRIPTION

FIG. **1** is a perspective view of a stamp press showing our new design;

FIG. **2** is a top view thereof;

FIG. **3** is a side view thereof; and,

FIG. **4** is a bottom view thereof.

1 Claim, 3 Drawing Sheets

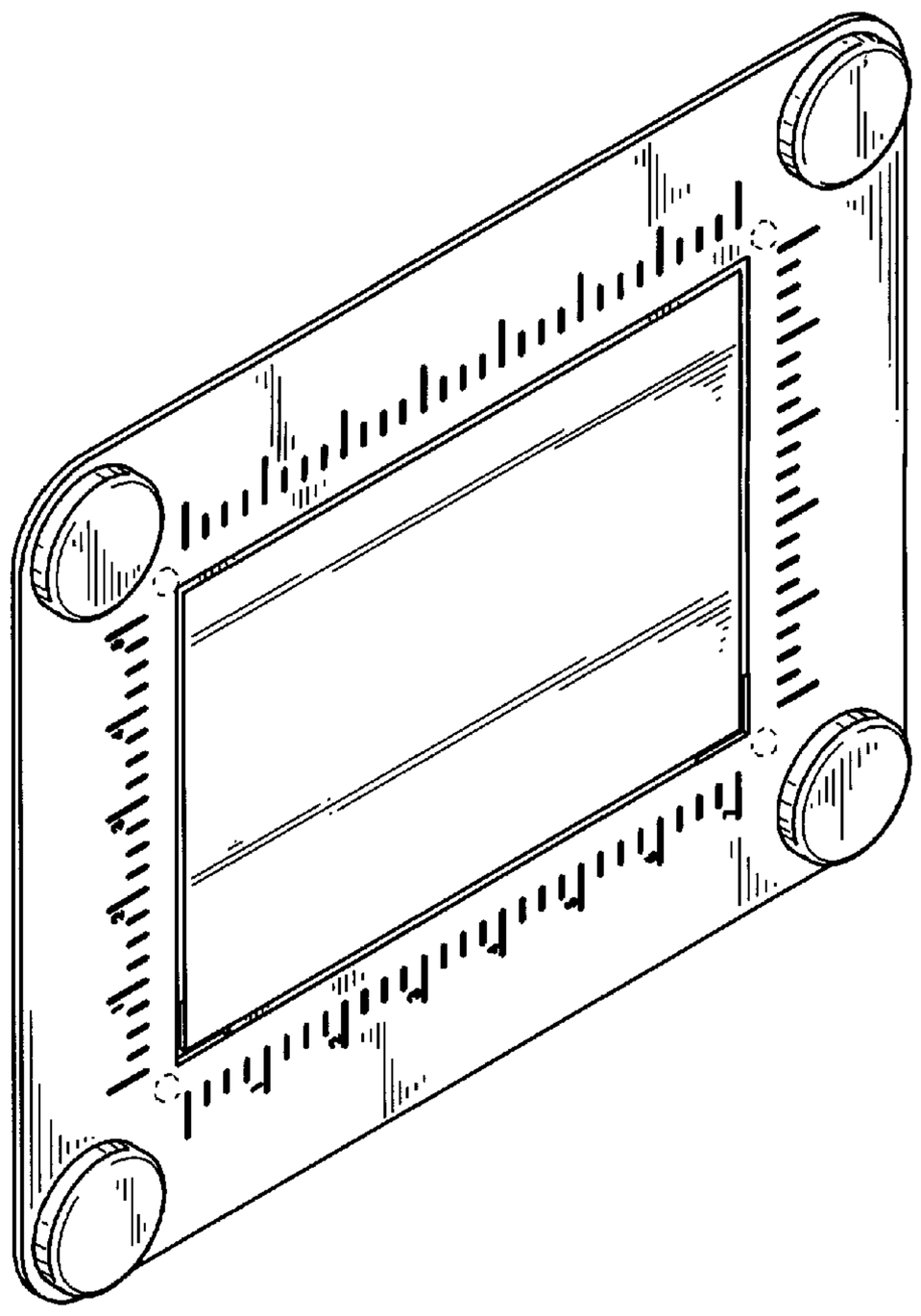

FIG. 1

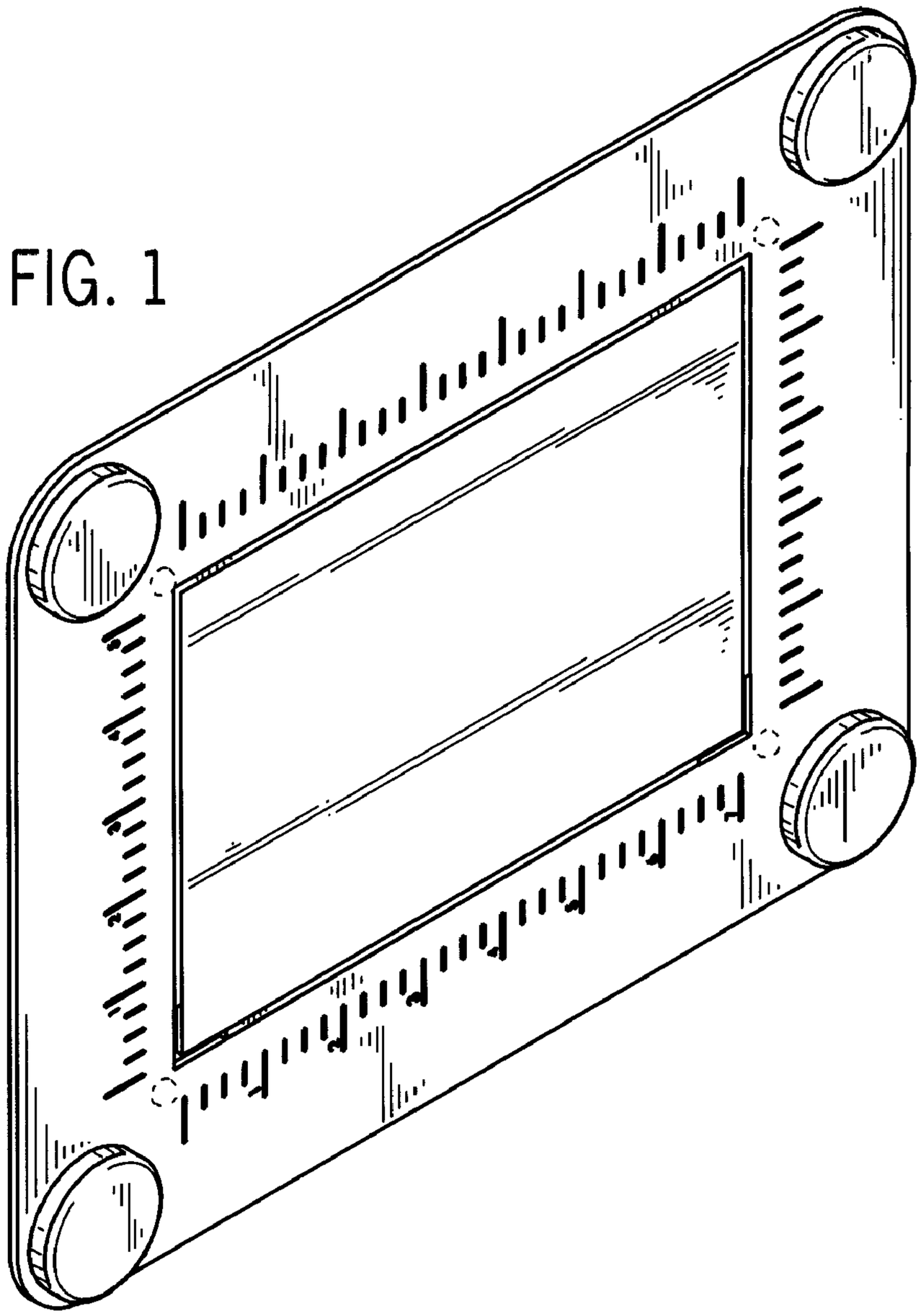



FIG. 3

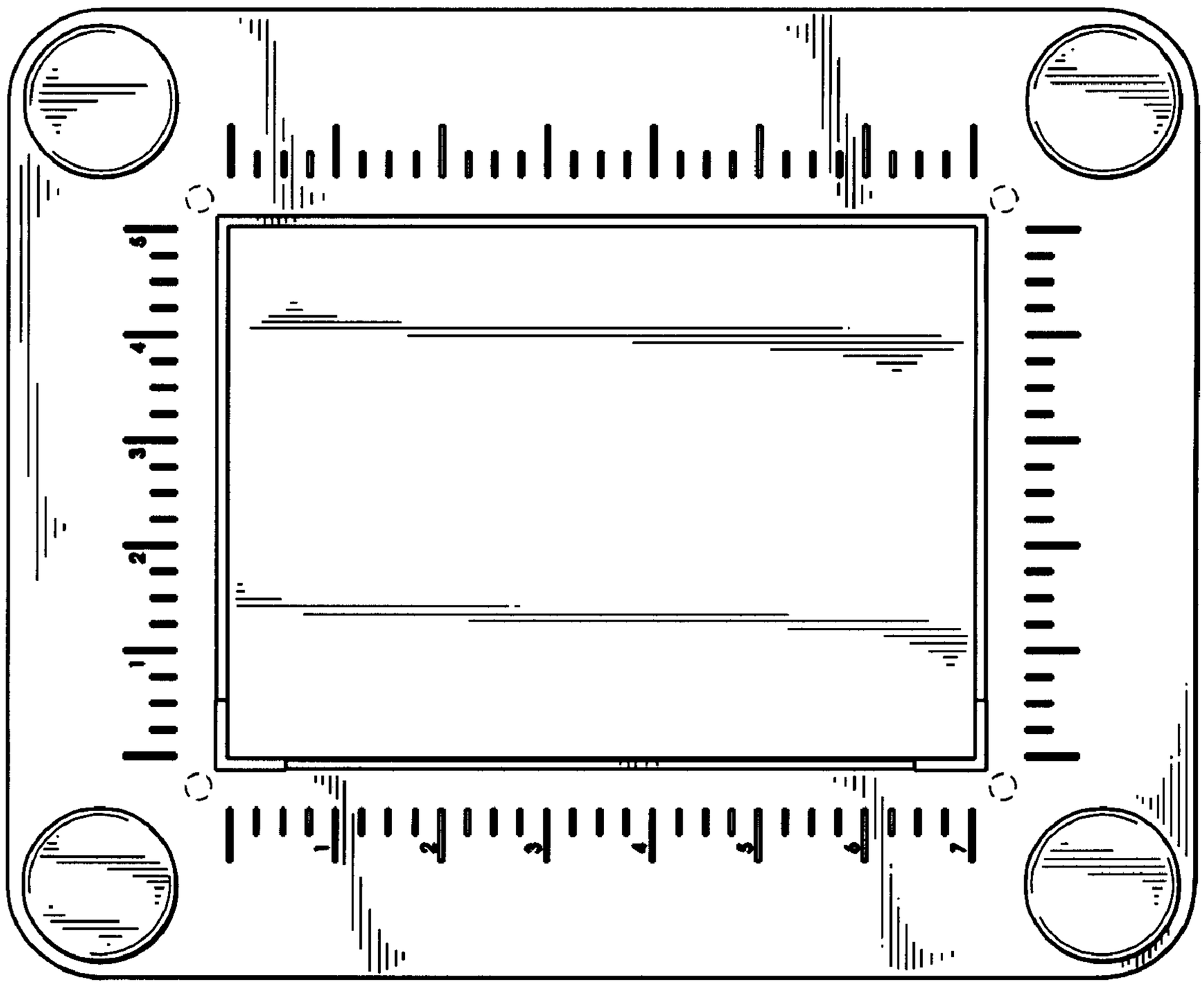

FIG. 2

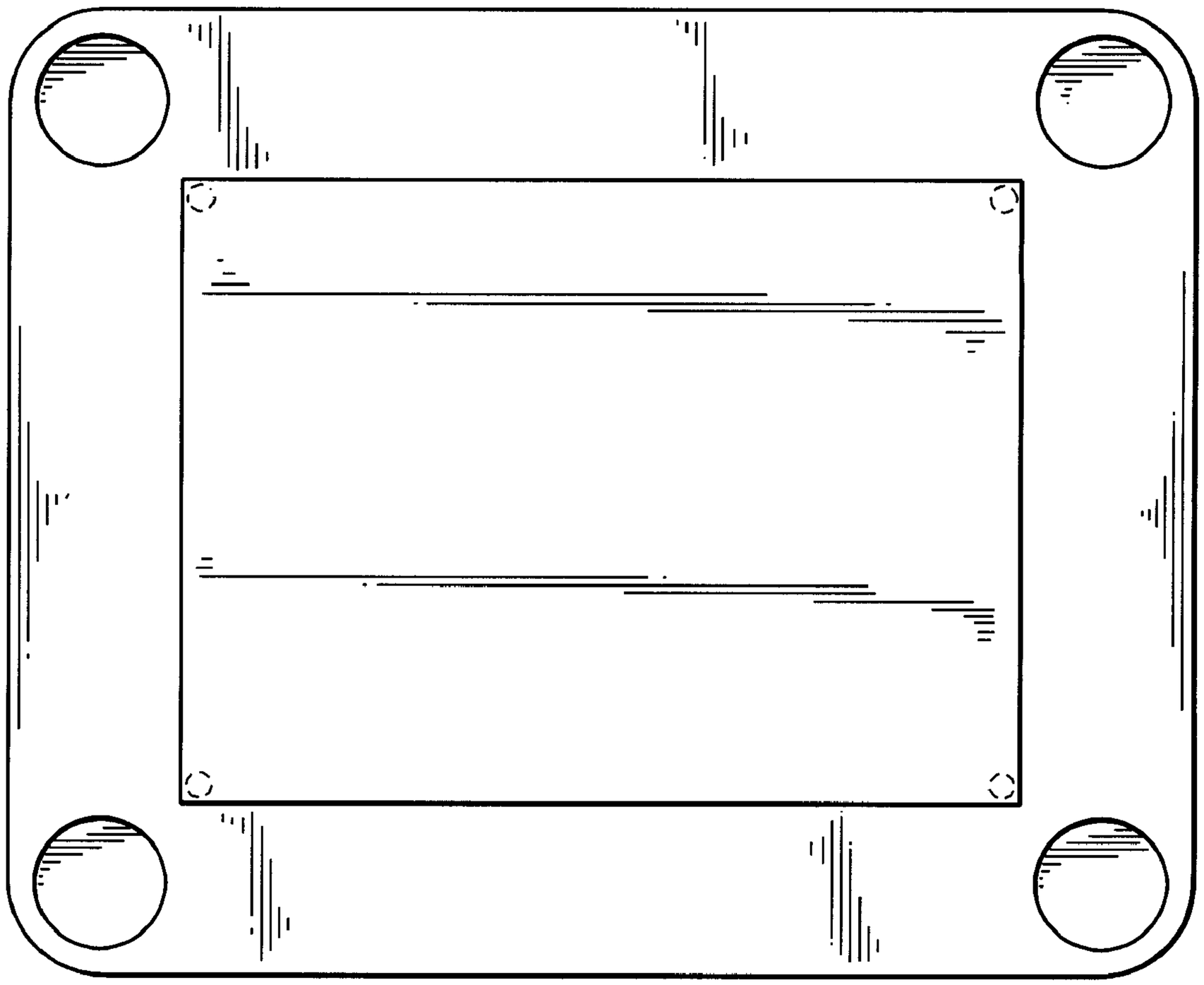

FIG. 4