(12) INTERNATIONAL APPLICATION PUBLISHED UNDER THE PATENT COOPERATION TREATY (PCT)

(19) World Intellectual Property Organization
International Bureau

(43) International Publication Date
07 December 2017 (07.12.2017)

WIPO | PCT

(10) International Publication Number
WO 2017/207405 A1

(51) International Patent Classification:
H05B 33/08 (2006.01)

(21) International Application Number:
PCT/EP2017/062654

(22) International Filing Date:
24 May 2017 (24.05.2017)

(25) Filing Language: English

(26) Publication Language: English

(30) Priority Data:
62/343,977 01 June 2016 (01.06.2016) US
16175859.4 23 June 2016 (23.06.2016) EP

(71) Applicant: **PHILIPS LIGHTING HOLDING B.V.** [NL/NL]; High Tech Campus 45, 5656 AE Eindhoven (NL).

(72) Inventors: **FANG, Yuhong**; c/o High Tech Campus 45, 5656 AE Eindhoven (NL). **CLAUBERG, Bernd**; c/o High Tech Campus 45, 5656 AE Eindhoven (NL). **GUDIPATI, Harshitha**; c/o High Tech Campus 45, 5656 AE Eindhoven (NL). **CIOLEK, Mark**; c/o High Tech Campus 45, 5656 AE Eindhoven (NL). **GRUEV, George**; c/o High Tech Campus 45, 5656 AE Eindhoven (NL).

(74) Agent: **VERWEIJ, Petronella, Danielle** et al.; Philips Lighting B.V - Intellectual Property, High Tech Campus 45, 5656 AE Eindhoven (NL).

(81) Designated States *(unless otherwise indicated, for every kind of national protection available)*: AE, AG, AL, AM, AO, AT, AU, AZ, BA, BB, BG, BH, BN, BR, BW, BY, BZ, CA, CH, CL, CN, CO, CR, CU, CZ, DE, DJ, DK, DM, DO, DZ, EC, EE, EG, ES, FI, GB, GD, GE, GH, GM, GT, HN, HR, HU, ID, IL, IN, IR, IS, JP, KE, KG, KH, KN, KP, KR, KW, KZ, LA, LC, LK, LR, LS, LU, LY, MA, MD, ME, MG, MK, MN, MW, MX, MY, MZ, NA, NG, NI, NO, NZ, OM, PA, PE, PG, PH, PL, PT, QA, RO, RS, RU, RW, SA, SC,

WO 2017/207405 A1

(54) Title: MICROPROCESSOR CONTROLLED LIGHT EMITTING DIODE DRIVING CIRCUIT

Figure 2

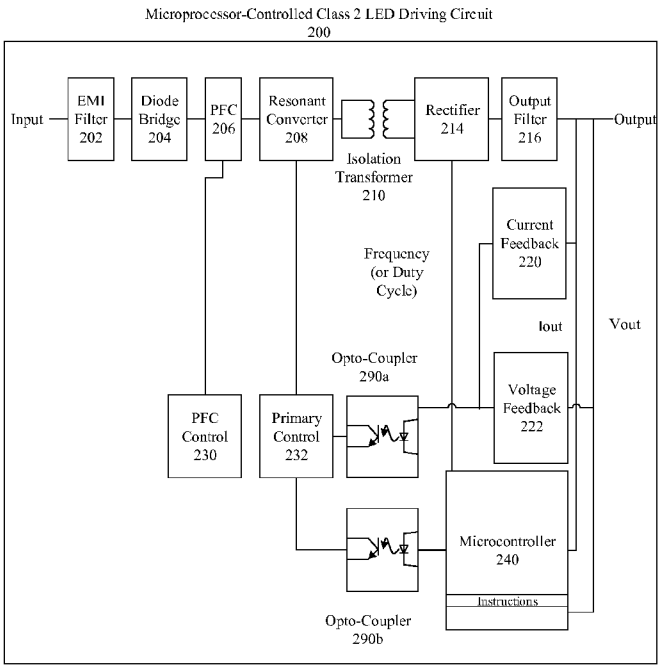

(57) Abstract: A light emitting diode (LED) driving circuit includes a primary control section and an output section isolated from the primary control section. A method of detecting faults in the driving circuit includes obtaining an output level of the driving circuit. The method also includes comparing, by a microprocessor in the output section, the output level of the light emitting diode driving circuit with a predetermined threshold level. When the output 5 level of the light emitting diode does not meet the predetermined threshold level, the method includes identifying by the microprocessor a fault in the light emitting diode driving circuit based on the comparing with the predetermined threshold level.

[Continued on next page]

SD, SE, SG, SK, SL, SM, ST, SV, SY, TH, TJ, TM, TN, TR, TT, TZ, UA, UG, US, UZ, VC, VN, ZA, ZM, ZW.

(84) **Designated States** *(unless otherwise indicated, for every kind of regional protection available)*: ARIPO (BW, GH, GM, KE, LR, LS, MW, MZ, NA, RW, SD, SL, ST, SZ, TZ, UG, ZM, ZW), Eurasian (AM, AZ, BY, KG, KZ, RU, TJ, TM), European (AL, AT, BE, BG, CH, CY, CZ, DE, DK, EE, ES, FI, FR, GB, GR, HR, HU, IE, IS, IT, LT, LU, LV, MC, MK, MT, NL, NO, PL, PT, RO, RS, SE, SI, SK, SM, TR), OAPI (BF, BJ, CF, CG, CI, CM, GA, GN, GQ, GW, KM, ML, MR, NE, SN, TD, TG).

Declarations under Rule 4.17:

— *as to applicant's entitlement to apply for and be granted a patent (Rule 4.17(ii))*

Published:

— *with international search report (Art. 21(3))*

Microprocessor controlled light emitting diode driving circuit

BACKGROUND

1. FIELD OF THE DISCLOSURE

The present disclosure relates to the field of light emitting diode (LED) driving circuits. More particularly, the present disclosure relates to a microprocessor in a light emitting diode driving circuit that detects faults/fault conditions.

2. BACKGROUND INFORMATION

A typical light emitting diode driving circuit outputs current, voltage and power for loads imposed by one or more light emitting diodes. A light emitting diode driving circuit can be classified as a UL Class 2 LED Driver so long as the light emitting diode driving circuit complies with the UL 1310 standard for "Class 2 Power Units". A conventional light emitting diode driving circuit includes circuitry designed to output current, voltage and power close to UL Class 2 LED Driver limits.

An example of driving circuit that is not compliant with UL Class 2 Power Unit is disclosed by US 2013/0300310.

SUMMARY OF THE INVENTION

The invention proposes a driving method and a driving circuit compliant with UL 1310 standard. In the invention, a primary section is insulated from an output section. A primary control circuit placed in the primary section controls the output level. A microprocessor in the output section is used for fault detection and for reporting a detected fault to the primary control circuit through an insulating link.

The invention will be more defined in the method of claims 1-9 or in the LED driving circuit of claims 10-14.

BRIEF DESCRIPTION OF THE DRAWINGS

Figure 1 shows an exemplary electronic device that includes a microprocessor controlled light emitting diode driving circuit, according to an aspect of the present disclosure;

Figure 2 shows an exemplary microprocessor controlled light emitting diode driving circuit, according to an aspect of the present disclosure;

Figure 3 shows an exemplary process for a microprocessor controlled light emitting diode driving circuit, according to an aspect of the present disclosure;

Figure 4 shows another exemplary microprocessor controlled light emitting diode driving circuit, according to an aspect of the present disclosure; and

Figure 5 shows another exemplary process for a microprocessor controlled light emitting diode driving circuit, according to an aspect of the present disclosure.

DETAILED DESCRIPTION

In view of the foregoing, the present disclosure, through one or more of its various aspects, embodiments and/or specific features or sub-components, is thus intended to bring out one or more of the advantages as specifically noted below.

The present disclosure describes a microprocessor programmed logically to protect a light emitting diode driving circuit, so that, for example, a single fault mechanism for protecting the driving circuit can be detected by the microprocessor. The driving circuit may include a primary control section and an output section isolated from the primary control section. The driving circuit may be designed to comply with UL Class 2 LED Driver requirements, and can help ensure that output parameters of the driving circuit consistently meet such requirements. The microprocessor may also provide features such as power computation, to help ensure protection of circuit components in a high power environment.

Methods described herein are illustrative examples, and as such are not intended to require or imply that any particular process of any embodiment be performed in the order presented. Words such as "thereafter," "then," "next," etc. are not intended to limit the order of the processes, and these words are instead used to guide the reader through the description of the methods. Further, any reference to claim elements in the singular, for example, using the articles "a," "an" or "the", is not to be construed as limiting the element to the singular.

Additionally, terms such as “driving circuit” and “driver” may be used interchangeably herein. In the absence of explanations distinguishing such terms, similar and comparable terms such as these should be considered equivalent for the purposes of the explanations provided herein. As an example, a microprocessor described herein may also be, for example, a microprocessor chip, a controller, or a micro-controller, or a digital signal microprocessor (DSP).

Figure 1 shows an exemplary electronic device that includes a microprocessor controlled light emitting diode driving circuit, according to an aspect of the present disclosure. A microprocessor in the microprocessor controlled light emitting diode driving circuit provides for supervision and protection of output current, output voltage and output power. The microprocessor can also provide for output current control (regulation), and output power control (regulation).

In Figure 1, the electronic device 10 includes a microprocessor controlled light emitting diode driving circuit 100 and light emitting diodes 199. The microprocessor controlled light emitting diode driving circuit 100 includes a primary control section 100a and an output section 100b which is isolated from the primary control section 100a. The output section is the portion of the driving circuit which provides power to a load. The microprocessor controlled light emitting diode driving circuit 100 may be configured and operable to comply with UL Class 2 LED Driver requirements.

In Figure 1, isolation elements 110 and 190 are provided to isolate the primary control section 100a from the output section 100b. Isolation elements may include isolation transformers, opto-couplers, and other types of elements that can be used to isolate two sections, elements, or pieces of an element, from one another. The isolation provided by isolation elements 110 and 190 is not absolute, and instead may be an electrical isolation in one or more aspects. For example, an isolation transformer prevents current from flowing between two opposing sides. Similarly, an opto-coupler transfers a signal using light, and prevents transfer shocks from, for example, high voltages.

The output section 100b generally includes circuitry for providing power, voltage and current as output so as to drive the light emitting diode(s) 199. The output section 100b also includes mechanisms for detecting levels of the power, voltage and current provided as output, so as to provide feedback to the primary control section 100a.

The primary control section 100a generally provides primary control for the driving circuit 100 in driving the light-emitting diode(s). The primary control section 100a uses input power, voltage and current in order to start the driving circuit 100. The primary control section 100a also accepts feedback from the output section 100b in order to make adjustments to power, voltage and current that will be output from the output section 100b in order to drive the light emitting diode(s) 199.

In Figure 1, the individual circuit components of the microprocessor controlled light emitting diode driving circuit are not shown except for isolation elements 110 and 190. For example, the microprocessor described herein is not shown in Figure 1. As a general

matter, however, the microprocessor described herein is included in the output section 100b, and is isolated from the primary control section 100a in at least one aspect.

In Figure 1, the electronic device 10 is illustrative of devices that incorporate light emitting diodes and light emitting diode driving circuits, including light emitting diode driving circuits that comply with UL Class 2 LED Driver requirements. Such devices include lighting fixtures, entertainment displays, communications devices, and more. Such devices can also include electronic devices with memory and additional microprocessors beyond the microprocessor specific to the output section 100b of the driving circuit 100. Such devices may operate as standalone devices or may be connected, for example, using a network, to other devices or systems.

The electronic device 10 can be incorporated as or in a particular device that in turn is in an integrated system that includes additional devices. In a particular embodiment, the electronic device 10 can be implemented using electronic devices that provide voice, video or data communication. Further, while a single electronic device 10 is illustrated, the electronic device 10 may be included in a "system" that includes any collection of systems or sub-systems that individually or jointly execute a set, or multiple sets, of instructions to perform one or more computer software functions.

A microprocessor as described herein is tangible and non-transitory. As used herein, the term “non-transitory” is to be interpreted not as an eternal characteristic of a state, but as a characteristic of a state that will last for a period of time. The term “non-transitory” specifically disavows fleeting characteristics such as characteristics of a particular carrier wave or signal or other forms that exist only transitorily in any place at any time. A microprocessor is an article of manufacture and/or a machine component. A microprocessor for an electronic device 10 is configured to execute software instructions in order to perform functions as described in the various embodiments herein. A microprocessor for an electronic device 10 may be a general purpose microprocessor or may be part of an application specific integrated circuit (ASIC). Additionally, any microprocessor described herein may include multiple microprocessors, parallel microprocessors, or both. Multiple microprocessors may be included in, or coupled to, a single device or multiple devices.

Moreover, the electronic device 10 may include storage such as a memory. Memories described herein are tangible storage mediums that can store data and executable instructions, and are non-transitory during the time instructions are stored therein. A memory described herein is an article of manufacture and/or machine component. Memories described herein are computer-readable mediums from which data and executable

instructions can be read by a processor. Memories as described herein may be random access memory (RAM), read only memory (ROM), flash memory, electrically programmable read only memory (EPROM), electrically erasable programmable read-only memory (EEPROM), registers, or any other form of storage medium known in the art. Memories may be volatile or non-volatile, secure and/or encrypted, unsecure and/or unencrypted.

In a particular embodiment, the electronic device 10 may include a computer-readable medium in which one or more sets of instructions, for example, software, can be embedded. Sets of instructions can be read from the computer-readable medium. Further, the instructions, when executed by a microprocessor, can be used to perform one or more of the methods and processes as described herein. In a particular embodiment, the instructions may reside completely, or at least partially, within a separate memory, and/or within the microprocessor during execution by the electronic device 10.

In an alternative embodiment, dedicated hardware implementations, such as application-specific integrated circuits (ASICs), programmable logic arrays and other hardware components, can be constructed to implement one or more of the methods described herein. One or more embodiments described herein may implement functions using two or more specific interconnected hardware modules or devices with related control and data signals that can be communicated between and through the modules. Accordingly, the present disclosure encompasses software, firmware, and hardware implementations. Nothing in the present application should be interpreted as being implemented or implementable solely with software and not hardware such as a tangible non-transitory microprocessor and/or memory.

In accordance with various embodiments of the present disclosure, the methods described herein may be implemented using a microprocessor that executes software programs. Further, in an exemplary, non-limited embodiment, implementations can include distributed processing, component/object distributed processing, and parallel processing.

Figure 2 shows an exemplary microprocessor controlled light emitting diode driving circuit, according to an aspect of the present disclosure. In Figure 2, input power is provided to a power factor correction (PFC) stage 206 of the driving circuit 200 through an electromagnetic interference (EMI) filter 202 and a diode bridge 204. The power factor correction stage 206 is controlled by a power factor correction control 230, and corrects input power levels in accordance with the control of the power factor correction control 230. The EMI filter 202 removes interference presented with the input power. The diode bridge 204 can be used to convert alternating current to direct current.

A resonant converter 208 is used to adjust voltage or current gains using a switching frequency. The adjustments are used to regulate the output voltage or current. In another embodiment, a PWM converter can be used in lieu of the resonant converter.

In Figure 2, an output filter 216 filters output from the driving circuit 200. The output from output filter 216 is provided via a rectifier 214 which converts alternating current to direct current. The rectifier 214 also outputs an operational frequency F when the driving circuit 200 includes a resonant converter 208, or a duty cycle when the driving circuit 200 includes a PWM converter in lieu of the resonant converter 208.

A current feedback 220 detects the output current and provides the detected current as feedback to a primary control 232 through opto-coupler 290a. A voltage feedback 222 detects the output voltage and provides the detected voltage as feedback to primary control 232 through opto-coupler 290a.

In Figure 2, a microprocessor of the microprocessor controlled light emitting diode driving circuit is a microcontroller 240. The microcontroller 240 provides for voltage and current feedback as well as power limitation. The microcontroller 240 measures output current and output voltages. The microcontroller 214 also obtains the frequency F or duty cycle from the rectifier 214. The microcontroller 240 also measures frequency when the driving circuit 200 includes a resonant converter 208. Alternatively, the microcontroller 240 measures duty cycle when the driving circuit 200 includes a PWM converter in lieu of a resonant converter 208.

The microcontroller 240 also obtains the output current and voltage, and can analyze output current, output voltage, and frequency F or duty cycle, and set output current settings or trigger protection based on the analysis. The output current settings or protection triggers are provided from the microcontroller 240 to a primary control 232 through an opto-coupler 290b.

The primary control 232 may include a processor that executes instructions similar to the microcontroller 240. The resonant converter 208 adjusts voltage or current gains in accordance with instructions from primary control 232. The primary control 232 receives output feedback from current feedback 220 and voltage feedback 222, as well as results of analysis (e.g., the current output setting and/or the protection triggers) from the microcontroller 240. The outback feedback is received by the primary control 232 via opto-coupler 290a. The analysis results are received by the primary control 232 via the opto-coupler 290b.

The instructions from the primary control 232 based on current feedback and voltage feedback can be used to make voltage adjustments or current adjustments at the resonant converter 208. The instructions from the primary control 232 based on the analysis results are received by the resonant converter and can be used to set output current or to trigger protection.

In Figure 2, the microcontroller 240 sets output current settings and detects faults based on, for example, the output current and/or output voltage and/or frequency or duty cycle. The operations of microcontroller 240 in Figure 2 are described further with respect to Figure 3 below. As an example, protection can be triggered by the microcontroller when the measured voltage indicates an open circuit or short circuit, as the measured voltage will be out of a predetermined range. Similarly, if power is higher than a maximum rated power, protection can be triggered by the microcontroller 240. Additional protections provided directly from sensing currents are explained below with respect to Figure 3.

In Figure 2, the EMI filter 202, diode bridge 204, PFC 206, resonant converter 208, PFC control, and primary control are all elements of a primary control section of the driving circuit 200. The rectifier 214, output filter 216, current feedback 220, voltage feedback 222, and microcontroller 240 are all elements of an output section of the driving circuit 200. As explained with respect to Figure 1, the primary control section and the output section of a driving circuit are isolated from one another in at least one aspect. In Figure 1, input current is isolated by the isolation transformer 210, and output such as Vout is isolated from the primary control 232 by opto-couplers 290a and 290b. The microcontroller 240 is provided in the output section of the driving circuit 200, and is isolated from the primary control section in at least one aspect.

Figure 3 shows an exemplary process for a microprocessor controlled light emitting diode driving circuit, according to an aspect of the present disclosure. In Figure 3, UL Class 2 LED Driver limits can be met using the microprocessor controlled light emitting diode driving circuit 200 in Figure 2.

In Figure 3, an operating frequency F is obtained by the microcontroller 240 at S302 from the rectifier 214. As explained previously, when a PWM converter is used in the driving circuit instead of a resonant converter, the duty cycle of the PWM converter is obtained by the microprocessor instead of the operating frequency F. In either case, the operating frequency F or duty cycle can be used to trigger current protection.

An output voltage Vout is obtained at S304. An output current is obtained at S306.

At S310, an initial determination is made using the output current Iout and the output voltage Vout. Here, the rated maximum power Pmax is divided by the output voltage Vout and the result is compared with the current output Iout. If the current output is higher (S310 = No), the current setting is output by the microcontroller 240. If the current is lower (S310 = Yes), the process proceeds to S320. That is, the output current setting Iout can be calculated by dividing a rated maximum output power Pmax by the measured output voltage Vout. The output current setting can be used to control the light emitting diode driving circuit 200 to have a constant power output under the UL Class 2 LED Driver limit.

At S320 and S330, checks are made for current sensing faults. At S320, when the driving circuit employs a resonant converter, a check is made whether the output current Iout is lower than a current threshold (I-Threshold) and whether the operating frequency is lower than a frequency threshold (F-Threshold). When the current is below the threshold I-Threshold and the operating frequency is below the frequency threshold F-Threshold (S320 = Yes), current protection is triggered at S335. At S330, when the driving circuit employs a PWM converter, a check is made whether the output current Iout is lower than a current threshold (I-Threshold) and whether the PWM duty cycle is greater than a duty cycle threshold T-Threshold. When the current is lower than the threshold I-Threshold and the duty cycle is greater than the duty cycle threshold T-Threshold (S330 = Yes), current protection is triggered at S335.

That is, with either determination at S320 or S330, the microcontroller 240can measure the output current Iout, and when the measured output current Iout is out of a predetermined range and the parameters for frequency or duty cycle are met, protection can be triggered..

When determinations at S320 and S330 are negative, the process next compares output voltage Vout with a predetermined range to make sure the output voltage Vout is within the predetermined range. That is, when the driving circuit 200 includes a broken or shorted isolation transformer or current sensing resistor, the determinations at S320 or S330 will operate to detect the fault. Therefore, even when the resonant converter operates at low frequency or the PWM converter operates at a high duty cycle, the driving circuit 200 will detect the broken or shorted elements at S320 or S33o using the microcontroller 240. As the microcontroller 240 measures the current and frequency or duty

cycle, protection will be triggered if current sensing is low and at same time operating frequency is low for a resonant converter or duty cycle is high for a PWM converter.

When output voltage Vout is outside of the predetermined range (S340 = Yes), voltage protection is triggered at S345. That is, when a voltage sensing circuit has an open circuit or short circuit, the measured voltage will be out of voltage range, and the protection will be triggered.

If voltage protection is within the predetermined range (S340 = No), a final check is made at S350 whether output voltage Vout multiplied by output current Iout is greater than the maximum rated power. When output voltage Vout multiplied by output current Iout is greater than the maximum rated power Pmax (S355 = Yes), power protection is triggered at S355. That is, the microcontroller also calculates output power based on output current and voltage. If output power is higher than the rated maximum power, the protection will be triggered.

If after the checks at S310, S320, S330, S340 and S350, no changes are needed (i.e., S350 = No), the process returns to a normal routine at S360. That is, if the microcontroller does not output a current setting at S315 or trigger protection at S335, S345 or S365, the process routines to a normal routine, as no fault is detected.

Figure 4 shows another exemplary microprocessor controlled light emitting diode driving circuit, according to an aspect of the present disclosure. In Figure 4, elements similar or identical to the elements in Figure 2 are labeled with similar numbers and labels. In Figure 4, the microprocessor 440 fully controls the output section of the microprocessor controlled light emitting diode driving circuit 400.

In Figure42, the EMI filter 402, diode bridge 404, PFC 406, resonant converter 408, PFC control 430, and primary control 432 are all elements of a primary control section of the driving circuit 400. The rectifier 4214, output filter 416, and microcontroller 440 are all elements of an output section of the driving circuit 400. As explained with respect to Figure 1, the primary control section and the output section of a driving circuit are isolated from one another in at least one aspect. In Figure 1, input current is isolated by the isolation transformer 410, and output such as Vout is isolated from the primary control 432 by opto-couplers 490a and 490b. The microcontroller 440 is provided in the output section of the driving circuit 400, and is isolated from the primary control section in at least one aspect.

Compared to the embodiment of Figure 2, the driving circuit 400 does not have a current feedback 220 or voltage feedback 222. In the embodiment of Figure 4, the

microcontroller 440 may possess all capabilities as the microcontroller 240 in Figure 2. The microcontroller 440 also renders the current feedback 220 and voltage feedback 222 moot, by assuming control for regulating the outputs from the driving circuit 400.

That is, in Figure 4, current feedback and voltage feedback in Figure 2 are provided by the microcontroller 440. In Figure 4, the microcontroller 440 replaces all hardware control circuits in the output section of the driving circuit 400 after the output filter 416. The microcontroller 440 measures or otherwise obtains output current, output voltage, and switching frequency for a resonant converter or duty cycle for a PWM converter.

Figure 5 shows another exemplary process for a microprocessor controlled light emitting diode driving circuit, according to an aspect of the present disclosure. The process in Figure 5 can be performed using instructions executed by the microcontroller 440 shown in Figure 4. The microprocessor obtains output voltage Vout at S504, obtains output current Iout at S506, and obtains maximum rated power Pmax at S508. The Vout and Iout are obtained dynamically based on real-time or near-real-time readings. On the other hand, Pmax is a set value stored, for example, in memory, and does not change.

The microcontroller 440 obtains three comparable values for use in output control at S510, S515 and S520, as follows. At S510, the microcontroller 440 identifies a frequency necessary to obtain the current setting using the output current Iout. At S515, the microcontroller 440 identifies a frequency necessary to obtain the current setting using the output voltage Vout. At S520, the microcontroller 440 identifies a frequency necessary to obtain the current setting using the power limit Pmax and output voltage Vmax by Pmax/Vout. At S530, the microcontroller 440 calculates the maximum operating frequency among the values identified at S510, S515 and S520, assuming that the driving circuit 400 includes a resonant converter 408.

When the driving circuit 400 includes a PWM converter in lieu of a resonant converter 408, the microcontroller 440 calculates a required duty cycle for the current settings at S510, S515 and S520, and a minimum duty cycle among the three at S530. The maximum operating frequency or minimum duty cycle is then used to control the output settings in the embodiments of Figure 4 and 5. That is, the current is set according to a maximum operating frequency or minimum duty cycle identified by the microprocessor 440 in the driving circuit 400. As a result, the driving circuit is used in "normal" operation to regulate output, and not only to identify faults as described separately with respect to the embodiments of Figures 2 and 3.

In Figure 5 the values identified at S510 and S515 can be obtained through compensation calculation. Compensation calculations include proportional-integral-derivative control (PID control). The value obtained at S520, however, is calculating using a fixed value for Pmax, since Pmax is the rated power for the driver circuit 400.

Accordingly, a microprocessor in a light emitting diode driving circuit can be used to both detect faults and regulate current. Such a microprocessor is useful can be used even when driving circuits are designed to output power very close to limits such as those imposed under the UL Class 2 LED Driver standards. As a result, even when a single fault condition occurs in operations close to the limits, the condition can be detected and remedied while remaining within the limits. Additional features characteristic of such a driving circuit are described herein.

Although a microprocessor controlled light emitting diode driving circuit has been described with reference to several exemplary embodiments, it is understood that the words that have been used are words of description and illustration, rather than words of limitation. Changes may be made within the purview of the appended claims, as presently stated and as amended, without departing from the scope and spirit of the microprocessor controlled light emitting diode driving circuit in its aspects. Although the microprocessor controlled light emitting diode driving circuit has been described with reference to particular means, materials and embodiments, the microprocessor controlled light emitting diode driving circuit is not intended to be limited to the particulars disclosed; rather the microprocessor controlled light emitting diode driving circuit extends to all functionally equivalent structures, methods, and uses such as are within the scope of the appended claims.

For example, as described above, a resonant converter may be replaced with a PWM converter such that calculations by the microcontrollers 240 and 440 will differ depending on which converter is used. Similarly, the disclosure references UL Class 2 LED Drivers in several places; however, requirements imposed by other standards may also be met using a microcontroller isolated in a section of a circuit as described herein.

As described herein, a hardware design for light emitting diode driving circuits close to Class 2 limit is unnecessarily complex and costly. An isolated microprocessor described herein achieves Class 2 requirements and can save space in the driver circuit and in an electronic device. Accordingly, the light emitting diode driving circuit can be smaller and lower cost.

While a computer-readable medium is described generally as a single medium, the term "computer-readable medium" includes a single medium or multiple media that store

one or more sets of instructions. The term "computer-readable medium" shall also include any medium that is capable of storing, encoding or carrying a set of instructions for execution by a microprocessor or that cause a computer system to perform any one or more of the methods or operations disclosed herein.

Although the present specification describes components and functions that may be implemented in particular embodiments with reference to particular standards and protocols, the disclosure is not limited to such standards and protocols. For example, standards such as UL 1310 represent examples of the state of the art. Such standards are periodically superseded by more efficient equivalents having essentially the same functions. Accordingly, replacement standards and protocols having the same or similar functions are considered equivalents thereof.

The illustrations of the embodiments described herein are intended to provide a general understanding of the structure of the various embodiments. The illustrations are not intended to serve as a complete description of all of the elements and features of the disclosure described herein. Many other embodiments may be apparent to those of skill in the art upon reviewing the disclosure. Other embodiments may be utilized and derived from the disclosure, such that structural and logical substitutions and changes may be made without departing from the scope of the disclosure. Additionally, the illustrations are merely representational and may not be drawn to scale. Certain proportions within the illustrations may be exaggerated, while other proportions may be minimized. Accordingly, the disclosure and the figures are to be regarded as illustrative rather than restrictive.

One or more embodiments of the disclosure may be referred to herein, individually and/or collectively, by the term “invention” merely for convenience and without intending to voluntarily limit the scope of this application to any particular invention or inventive concept. Moreover, although specific embodiments have been illustrated and described herein, it should be appreciated that any subsequent arrangement designed to achieve the same or similar purpose may be substituted for the specific embodiments shown. This disclosure is intended to cover any and all subsequent adaptations or variations of various embodiments. Combinations of the above embodiments, and other embodiments not specifically described herein, will be apparent to those of skill in the art upon reviewing the description.

According to an aspect of the present disclosure, a light emitting diode driving circuit includes a primary control section and an output section isolated from the primary control section. A method of detecting faults in the light emitting diode driving circuit

includes obtaining an output level of the light emitting diode driving circuit. The method also includes comparing, by a microprocessor in the output section, the output level of the light emitting diode driving circuit with a predetermined threshold level. When the output level of the light emitting diode does not meet the predetermined threshold level, the method includes identifying by the microprocessor a fault in the light emitting diode driving circuit based on the comparing with the predetermined threshold level.

According to another aspect of the present disclosure, the predetermined threshold level and comparing are in accordance with UL Class 2 requirements for light emitting diode driving circuits. The predetermined threshold level is set under a UL Class 2 requirement including a single fault condition.

According to yet another aspect of the present disclosure, the method includes obtaining one of a frequency of a resonant converter or a duty cycle of a pulse width modulation (PWM) converter. The obtained frequency or duty cycle is compared with another predetermined threshold. The identifying of the fault includes identifying a current sensing fault by the microprocessor and is further based on the comparing with the other predetermined threshold.

According to still another aspect of the present disclosure, the output level includes at least one of a power output level of the light emitting diode driving circuit, a voltage output level of the light emitting diode driving circuit, and a current output level of the light emitting diode driving circuit.

According to another aspect of the present disclosure, the method also includes calculating power output of the light emitting diode driving circuit based on a voltage output level of the light emitting diode driving circuit and a current output level of the light emitting diode driving circuit. In the absence of an identified fault the microprocessor regulates the power output of the light emitting diode driving circuit by comparing the calculated power output with a rated maximum power. Protection for the light emitting diode driving circuit is triggered when the calculated power output is higher than the rated maximum power.

According to yet another aspect of the present disclosure, the microprocessor is isolated from the primary control section of the light emitting diode driving circuit.\

According to still another aspect of the present disclosure, the output level is of an output current and the fault is a current sensing fault. The current sensing fault can be detected by measuring the output current and operating frequency of a resonant converter or a duty cycle of a pulse width modulation (PWM) converter, and comparing the measured

output current to a first predetermined range and comparing either the operating frequency or the duty cycle to a second predetermined range. When the current is below the first predetermined range and either the operating frequency is below the second predetermined range or the duty cycle is above the second predetermined range, an isolation transformer in the light emitting diode driving circuit is in a fault condition.

According to another aspect of the present disclosure, the microprocessor is included as a component of the output portion. The output level corresponds to an output provided to a load of the light emitting diode.

According to yet another aspect of the present disclosure, the output level includes a power output level provided to a load of the light emitting diode.

According to still another aspect of the present disclosure, the method includes regulating, using the tangible microprocessor, conditions of the light emitting diode driving circuit.

According to another aspect of the present disclosure, the conditions include at least one of a power output of the light emitting diode driving circuit, a voltage output of the light emitting diode driving circuit, and a current output of the light emitting diode driving circuit.

According to an aspect of the present disclosure, a light emitting diode driving circuit includes a primary control section and an output section isolated from the primary control section. The light emitting diode driving circuit also includes a memory that stores instructions for detecting faults in the light emitting diode driving circuit; and a microprocessor in an output section that executes the instructions. When executed by the microprocessor, the instructions cause the light emitting diode driving circuit to perform a process that includes obtaining an output level of the light emitting diode driving circuit. The output level of the light emitting diode driving circuit is compared with a predetermined threshold level. When the output level of the light emitting diode does not meet the predetermined threshold level, the process includes identifying a fault in the light emitting diode driving circuit based on the comparing.

According to an aspect of the present disclosure, a microprocessor is in an output section of a light emitting diode driving circuit with a primary control section and the output section isolated from the primary control section. The microprocessor is operable to execute instructions to detect faults in the light emitting diode driving circuit. When executed by the microprocessor, the instructions cause the light emitting diode driving circuit to perform a process that includes obtaining an output level of the light emitting diode

driving circuit. The process also includes comparing the output level of the light emitting diode driving circuit with a predetermined threshold level. When the output level of the light emitting diode does not meet the predetermined threshold level, the process includes identifying a fault in the light emitting diode driving circuit based on the comparing.

According to another aspect of the present disclosure, the light emitting diode driving circuit also includes a separate circuit that controls output current of the light emitting diode driving circuit and that controls output voltage of the light emitting diode driving circuit.

According to yet another aspect of the present disclosure, the microprocessor also performs a process comprising controlling current output of the light emitting diode driving circuit in the absence of an identified fault and controlling voltage output of the light emitting diode driving circuit in the absence of an identified fault.

As described above, Class 2 light emitting diode driving circuits are provided with a micro-processor that can provide a variety of uses including fault detection and power regulation. UL Class 2 light emitting diode driving circuits generally solve isolation issue that existed in conventional light emitting diode driving circuits by providing the isolation elements shown in the Figures and described herein. The UL Class 2 standard sets requirements for output current, output voltage and output power. As described herein, a logically programmed micro-processor can be provided in an electrical hardware circuit, and used to detect even single fault conditions so that outputs in normal use can be very close to UL Class 2 limits.

The Abstract of the Disclosure is provided to comply with 37 C.F.R. §1.72(b) and is submitted with the understanding that it will not be used to interpret or limit the scope or meaning of the claims. In addition, in the foregoing Detailed Description, various features may be grouped together or described in a single embodiment for the purpose of streamlining the disclosure. This disclosure is not to be interpreted as reflecting an intention that the claimed embodiments require more features than are expressly recited in each claim. Rather, as the following claims reflect, inventive subject matter may be directed to less than all of the features of any of the disclosed embodiments. Thus, the following claims are incorporated into the Detailed Description, with each claim standing on its own as defining separately claimed subject matter.

The preceding description of the disclosed embodiments is provided to enable any person skilled in the art to make or use the present disclosure. As such, the above disclosed subject matter is to be considered illustrative, and not restrictive, and the appended

claims are intended to cover all such modifications, enhancements, and other embodiments which fall within the true spirit and scope of the present disclosure. Thus, to the maximum extent allowed by law, the scope of the present disclosure is to be determined by the broadest permissible interpretation of the following claims and their equivalents, and shall not be restricted or limited by the foregoing detailed description.

CLAIMS:

1. A method of detecting faults in a light emitting diode (LED) driving circuit (200) with a primary control section (100a) and an output section (100b) isolated from the primary control section (100a), said primary control section (100a) comprising a primary control circuit (232) for setting the output from the primary controle section comprising:

obtaining (S302, S304) an output level of the light emitting diode driving circuit;

comparing (S310, S320, S330, S340, S350) , by a microprocessor (240) in the output section (100b), the output level of the light emitting diode driving circuit with a predetermined threshold level; and

when the output level of the light emitting diode does not meet the predetermined threshold level, identifying by the microprocessor a fault in the light emitting diode driving circuit based on the comparing with the predetermined threshold level and providing (S335, S345, S355) the fault detection to the primary control circuit (232) through an insulating link (290b).

2. The method of claim 1,

wherein the predetermined threshold level and comparing are in accordance with UL Class 2 requirements for LED Drivers, and

wherein the predetermined threshold level is set under a UL Class 2 requirement including a single fault condition.

3. The method of claim 1, said primary section comprising a resonant converter, wherein the comparison by the microprocessor further comprises:

obtaining from the output one of a frequency of a resonant converter or a duty cycle of a pulse width modulation (PWM) converter; and

comparing the obtained frequency or duty cycle with another predetermined threshold,

wherein the identifying of the fault comprises identifying a current sensing

fault by the microprocessor and is further based on the comparing with the other predetermined threshold.

4. The method of claim 1,

wherein the output level comprises at least one of a power output level of the light emitting diode driving circuit, a voltage output level of the light emitting diode driving circuit, and a current output level of the light emitting diode driving circuit.

5. The method of claim 1, further comprising:

calculating power output of the light emitting diode driving circuit based on a voltage output level of the light emitting diode driving circuit and a current output level of the light emitting diode driving circuit; and

regulating, by the microprocessor and in the absence of an identified fault, the power output of the light emitting diode driving circuit by comparing the calculated power output with a rated maximum power, and triggering protection for the light emitting diode driving circuit when the calculated power output is higher than the rated maximum power.

6. The method of claim 1,

wherein the output level is of an output current,

wherein the fault is a current sensing fault,

wherein the current sensing fault can be detected by measuring the output current and operating frequency of a resonant converter or a duty cycle of a pulse width modulation (PWM) converter, and comparing the measured output current to a first predetermined range and comparing either the operating frequency or the duty cycle to a second predetermined range,

wherein, when the current is below the first predetermined range and either the operating frequency is below the second predetermined range or the duty cycle is above the second predetermined range, an isolation transformer in the light emitting diode driving circuit is in a fault condition.

7. The method of claim 1,

wherein the output level comprises a power output level provided to a load of the light emitting diode.

8. The method of claim 1, further comprising:

regulating, using the microprocessor, conditions of the light emitting diode driving circuit.

9. The method of claim 8, wherein the conditions comprise at least one of a power output of the light emitting diode driving circuit, a voltage output of the light emitting diode driving circuit, and a current output of the light emitting diode driving circuit.

10. A light emitting diode (LED) driving circuit with a primary control section (100a) and an output section (100b) isolated from the primary control section (100a), said primary control section (100a) comprising a primary control circuit (232) for setting the output from the primary control section, characterized in that the output section comprises:

a microprocessor (240) that executes instructions,

a memory (240) that stores instructions for the microprocessor for detecting faults in the light emitting diode driving circuit; and

wherein, when executed by the microprocessor, the instructions cause the light emitting diode driving circuit to perform a process comprising:

obtaining an output level of the light emitting diode driving circuit;

comparing the output level of the light emitting diode driving circuit with a predetermined threshold level; and

when the output level of the light emitting diode does not meet the predetermined threshold level, identifying a fault in the light emitting diode driving circuit based on the comparing and reporting the fault to the primary control circuit (232) through an insulating link (290b).

11. The LED driving circuit of claim 10, wherein the insulating link is an optocoupler (290b).

12. The LED driving circuit of claim 10,

wherein the primary control circuit (232) controls output current of the light emitting diode driving circuit and controls output voltage of the light emitting diode driving circuit.

13. The LED driving circuit of claim 10,

wherein the microprocessor also performs a process comprising controlling current output of the light emitting diode driving circuit in the absence of an identified fault and controlling voltage output of the light emitting diode driving circuit in the absence of an identified fault.

14. The LED driving circuit of claim 10,

wherein the primary control section (100a) comprises a resonnant converter (208) controlled by the primary control circuit (232) for regulating the output voltage and/or current.

Figure 1

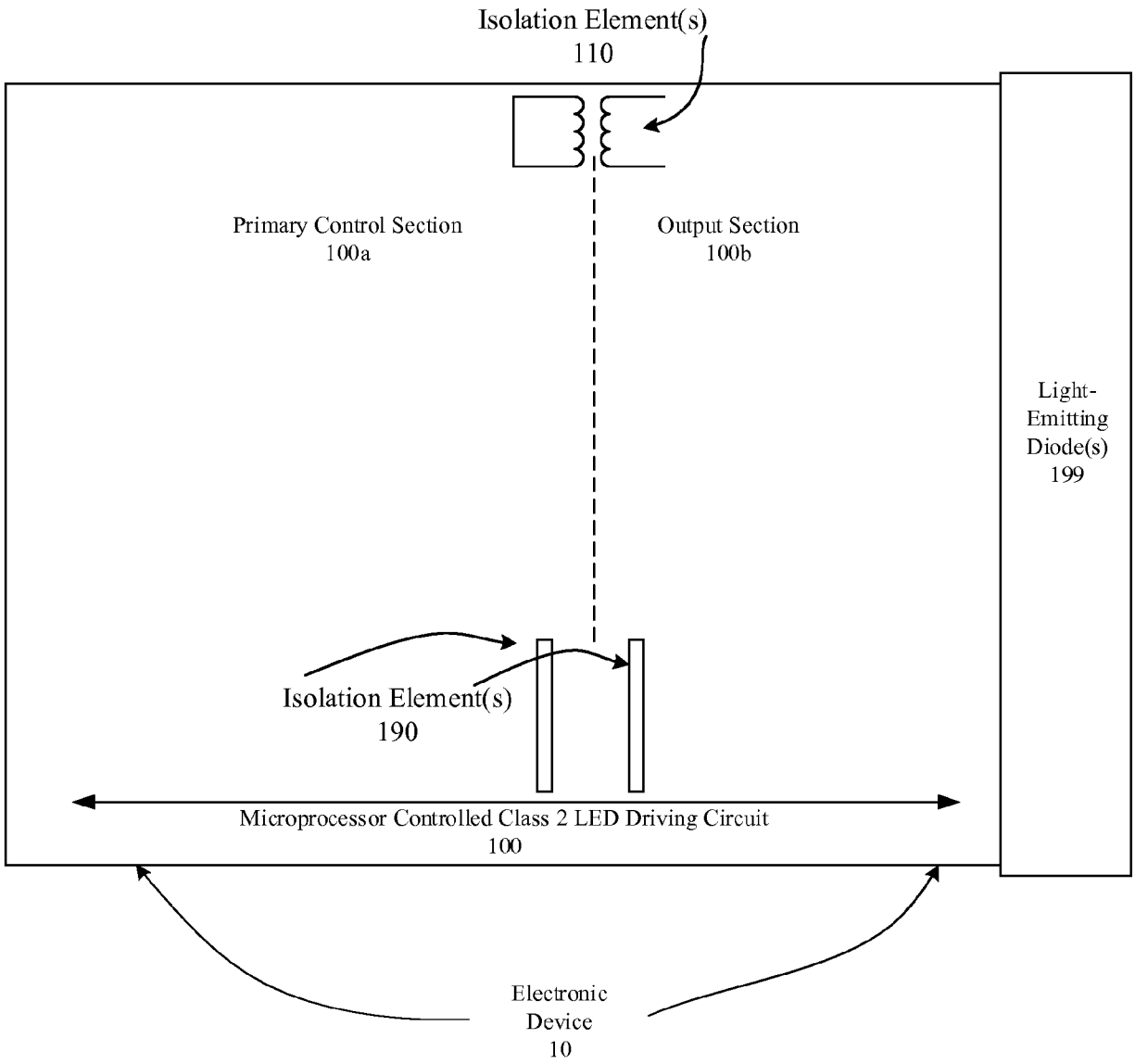
Isolation Element(s)
110
Primary Control Section
100a
Output Section
100b
Light-Emitting Diode(s)
199
Isolation Element(s)
190
Microprocessor Controlled Class 2 LED Driving Circuit
100
Electronic Device
10

Figure 2

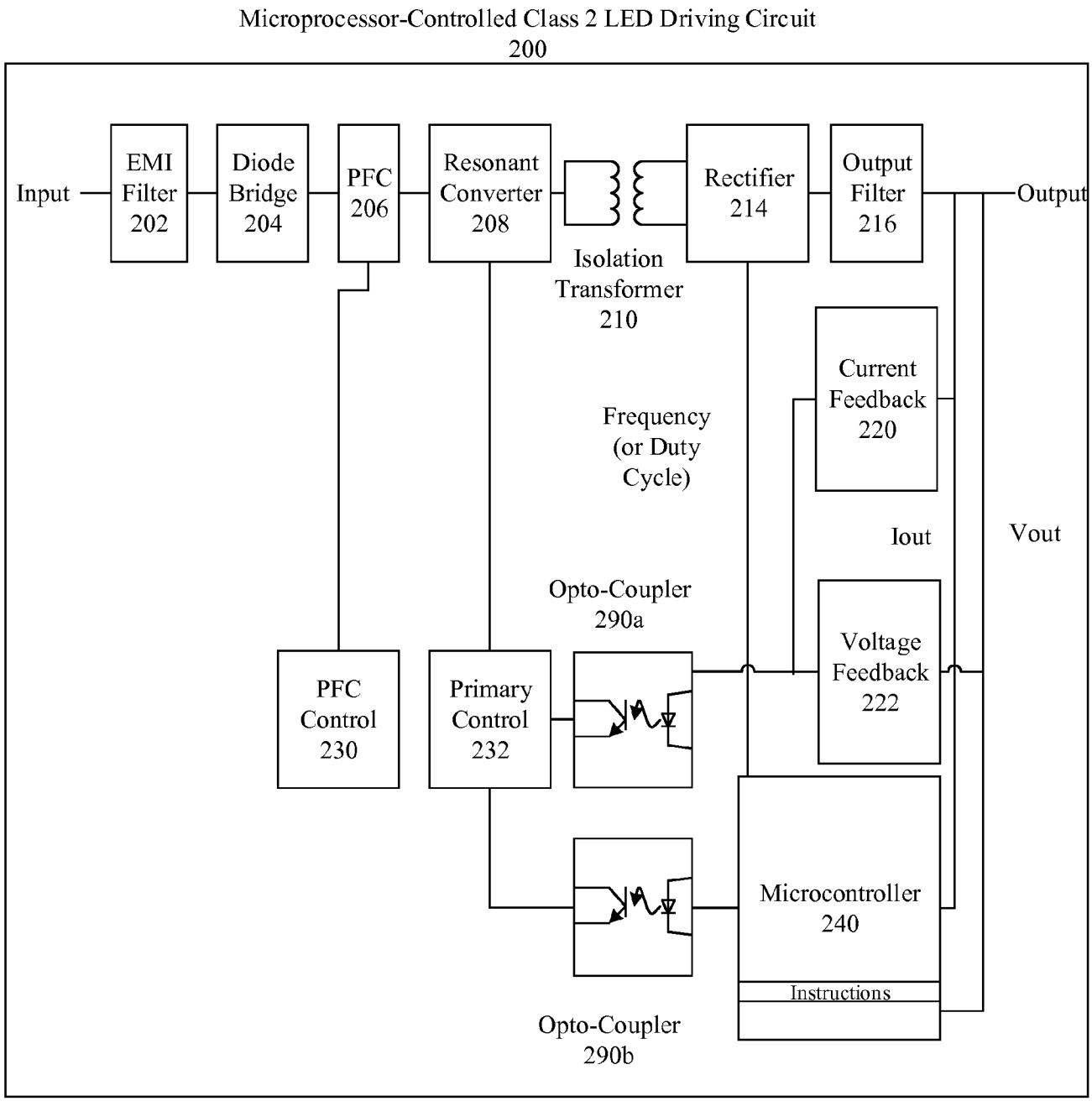
Microprocessor-Controlled Class 2 LED Driving Circuit
200
Input
EMI Filter 202
Diode Bridge 204
PFC 206
Resonant Converter 208
Isolation Transformer 210
Rectifier 214
Output Filter 216
Output
Current Feedback 220
Frequency (or Duty Cycle)
Iout
Vout
Opto-Coupler 290a
Voltage Feedback 222
PFC Control 230
Primary Control 232
Microcontroller 240
Instructions
Opto-Coupler 290b

Figure 3

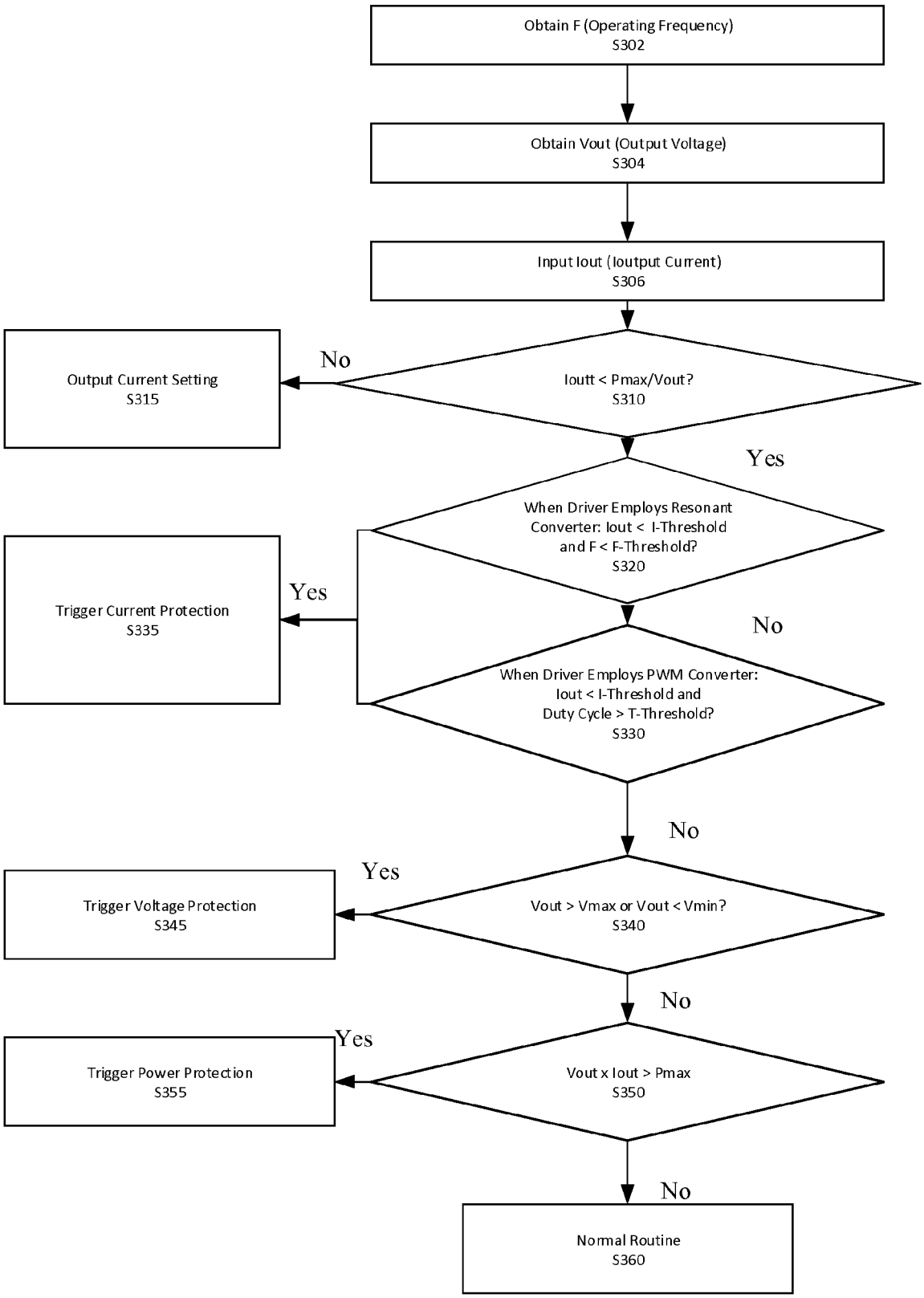
Obtain F (Operating Frequency)
S302
Obtain Vout (Output Voltage)
S304
Input Iout (Ioutput Current)
S306
Ioutt < Pmax/Vout?
S310
No
Output Current Setting
S315
Yes
When Driver Employs Resonant Converter: Iout < I-Threshold and F < F-Threshold?
S320
Yes
Trigger Current Protection
S335
No
When Driver Employs PWM Converter: Iout < I-Threshold and Duty Cycle > T-Threshold?
S330
No
Vout > Vmax or Vout < Vmin?
S340
Yes
Trigger Voltage Protection
S345
No
Vout x Iout > Pmax
S350
Yes
Trigger Power Protection
S355
No
Normal Routine
S360

Figure 4

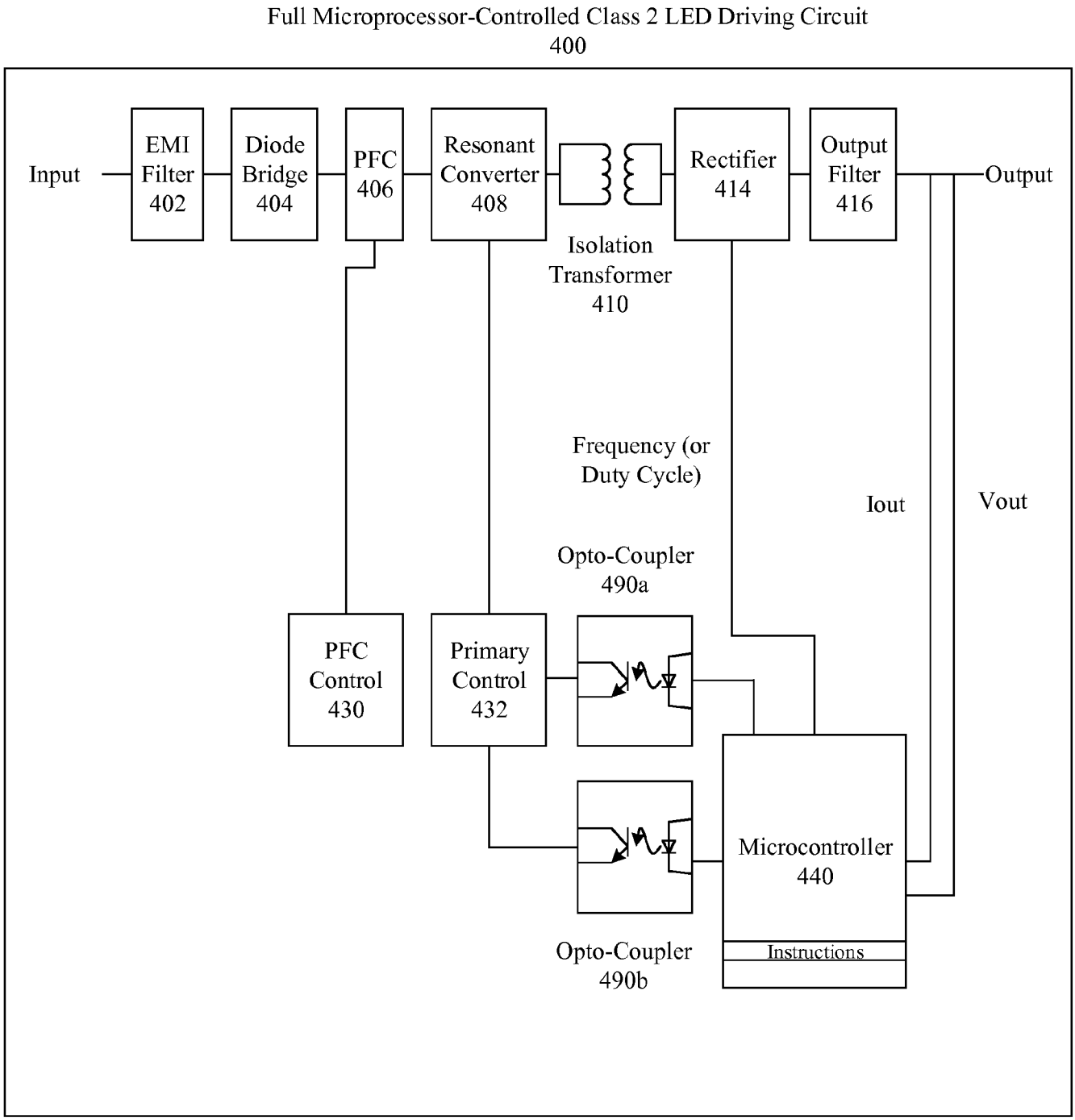
Full Microprocessor-Controlled Class 2 LED Driving Circuit
400
Input
EMI Filter 402
Diode Bridge 404
PFC 406
Resonant Converter 408
Isolation Transformer 410
Rectifier 414
Output Filter 416
Output
Frequency (or Duty Cycle)
Iout
Vout
Opto-Coupler 490a
PFC Control 430
Primary Control 432
Microcontroller 440
Instructions
Opto-Coupler 490b

Figure 5

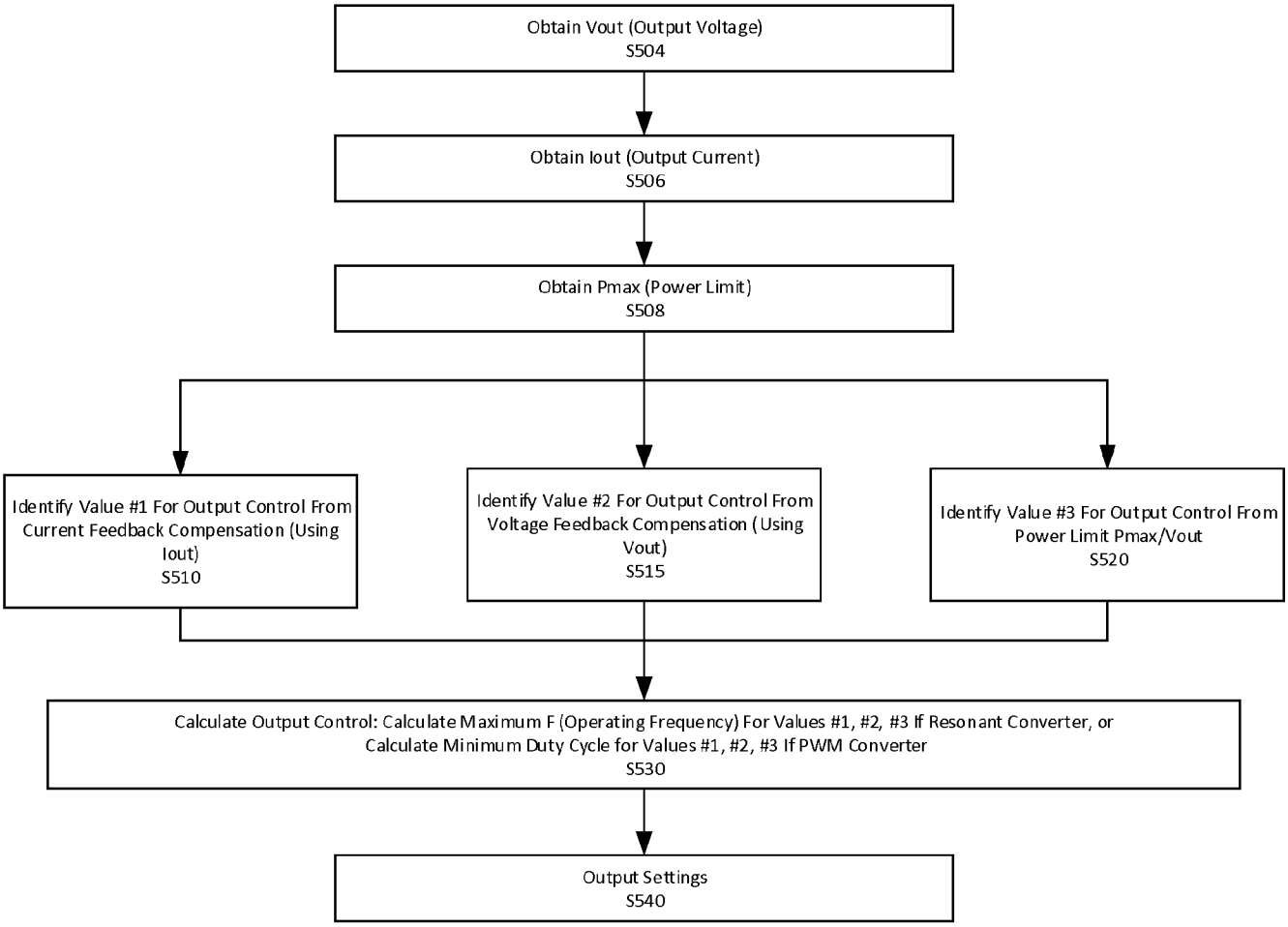
Obtain Vout (Output Voltage)
S504
Obtain Iout (Output Current)
S506
Obtain Pmax (Power Limit)
S508
Identify Value #1 For Output Control From Current Feedback Compensation (Using Iout)
S510
Identify Value #2 For Output Control From Voltage Feedback Compensation (Using Vout)
S515
Identify Value #3 For Output Control From Power Limit Pmax/Vout
S520
Calculate Output Control: Calculate Maximum F (Operating Frequency) For Values #1, #2, #3 If Resonant Converter, or Calculate Minimum Duty Cycle for Values #1, #2, #3 If PWM Converter
S530
Output Settings
S540

INTERNATIONAL SEARCH REPORT

International application No
PCT/EP2017/062654

A. CLASSIFICATION OF SUBJECT MATTER
INV. H05B33/08
ADD.

According to International Patent Classification (IPC) or to both national classification and IPC

B. FIELDS SEARCHED

Minimum documentation searched (classification system followed by classification symbols)
H05B

Documentation searched other than minimum documentation to the extent that such documents are included in the fields searched

Electronic data base consulted during the international search (name of data base and, where practicable, search terms used)
EPO-Internal, WPI Data

C. DOCUMENTS CONSIDERED TO BE RELEVANT

Category*	Citation of document, with indication, where appropriate, of the relevant passages	Relevant to claim No.
X	US 2011/080110 A1 (NUHFER MATTHEW W [US] ET AL) 7 April 2011 (2011-04-07) page 5, paragraph 58 - page 7, paragraph 64; figure 3 page 9, paragraph 76 - page 10, paragraph 84; figure 8 page 11, paragraph 91 - page 12, paragraph 99; figure 11	1-14

A	US 2013/300310 A1 (HU YUEQUAN [US]) 14 November 2013 (2013-11-14) page 3, paragraph 47 - page 3, paragraph 52; figures 4-6 page 4, paragraph 56 - page 5, paragraph 65; figures 11-14	1-14

	-/--	

[X] Further documents are listed in the continuation of Box C.

[X] See patent family annex.

* Special categories of cited documents :

"A" document defining the general state of the art which is not considered to be of particular relevance

"E" earlier application or patent but published on or after the international filing date

"L" document which may throw doubts on priority claim(s) or which is cited to establish the publication date of another citation or other special reason (as specified)

"O" document referring to an oral disclosure, use, exhibition or other means

"P" document published prior to the international filing date but later than the priority date claimed

"T" later document published after the international filing date or priority date and not in conflict with the application but cited to understand the principle or theory underlying the invention

"X" document of particular relevance; the claimed invention cannot be considered novel or cannot be considered to involve an inventive step when the document is taken alone

"Y" document of particular relevance; the claimed invention cannot be considered to involve an inventive step when the document is combined with one or more other such documents, such combination being obvious to a person skilled in the art

"&" document member of the same patent family

Date of the actual completion of the international search	Date of mailing of the international search report
20 July 2017	27/07/2017

Name and mailing address of the ISA/	Authorized officer
European Patent Office, P.B. 5818 Patentlaan 2 NL - 2280 HV Rijswijk Tel. (+31-70) 340-2040, Fax: (+31-70) 340-3016	Burchielli, M

1

Form PCT/ISA/210 (second sheet) (April 2005)

INTERNATIONAL SEARCH REPORT

International application No
PCT/EP2017/062654

C(Continuation). DOCUMENTS CONSIDERED TO BE RELEVANT

Category*	Citation of document, with indication, where appropriate, of the relevant passages	Relevant to claim No.
A	US 8 253 339 B1 (GODBOLE KEDAR [US] ET AL) 28 August 2012 (2012-08-28) the whole document -----	1-14
A	US 5 634 711 A (KENNEDY JOHN [CA] ET AL) 3 June 1997 (1997-06-03) column 5, line 40 - column 6, line 65; figure 3 -----	1-14

1

INTERNATIONAL SEARCH REPORT

Information on patent family members

International application No
PCT/EP2017/062654

Patent document cited in search report	Publication date	Patent family member(s)	Publication date
US 2011080110 A1	07-04-2011	CA 2776292 A1	14-04-2011
		CN 102668702 A	12-09-2012
		EP 2486772 A1	15-08-2012
		US 2011080110 A1	07-04-2011
		US 2011080111 A1	07-04-2011
		US 2011080112 A1	07-04-2011
		US 2013018522 A1	17-01-2013
		US 2013020964 A1	24-01-2013
		US 2014125244 A1	08-05-2014
		WO 2011044040 A1	14-04-2011
		WO 2011044083 A1	14-04-2011
		WO 2011044085 A1	14-04-2011
US 2013300310 A1	14-11-2013	CN 104272878 A	07-01-2015
		US 2013300310 A1	14-11-2013
		WO 2013169460 A1	14-11-2013
US 8253339 B1	28-08-2012	NONE	
US 5634711 A	03-06-1997	AU 7737894 A	03-04-1995
		CA 2149339 A1	23-03-1995
		US 5420768 A	30-05-1995
		US 5634711 A	03-06-1997
		WO 9507731 A1	23-03-1995