Nov. 3, 1953

W. E. LEWIS

APPARATUS FOR RULING NEGATIVES
IN PHOTOLITHOGRAPHIC ART

2,657,467

Filed April 20, 1951

3 Sheets-Sheet 1

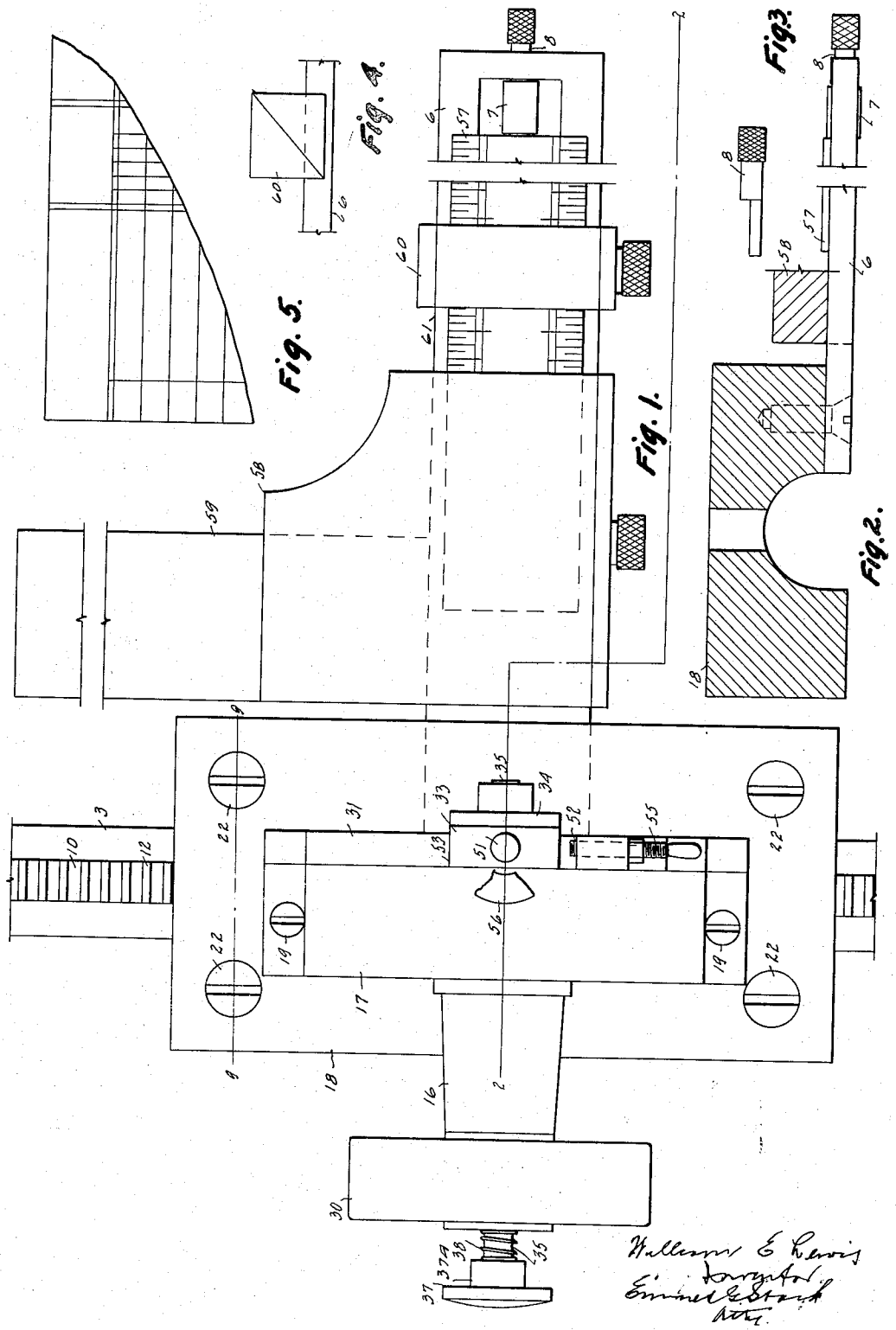

William E. Lewis
Inventor
Emmet G. Stark
Atty.

Nov. 3, 1953 W. E. LEWIS 2,657,467

APPARATUS FOR RULING NEGATIVES IN PHOTOLITHOGRAPHIC ART

Filed April 20, 1951 3 Sheets-Sheet 2

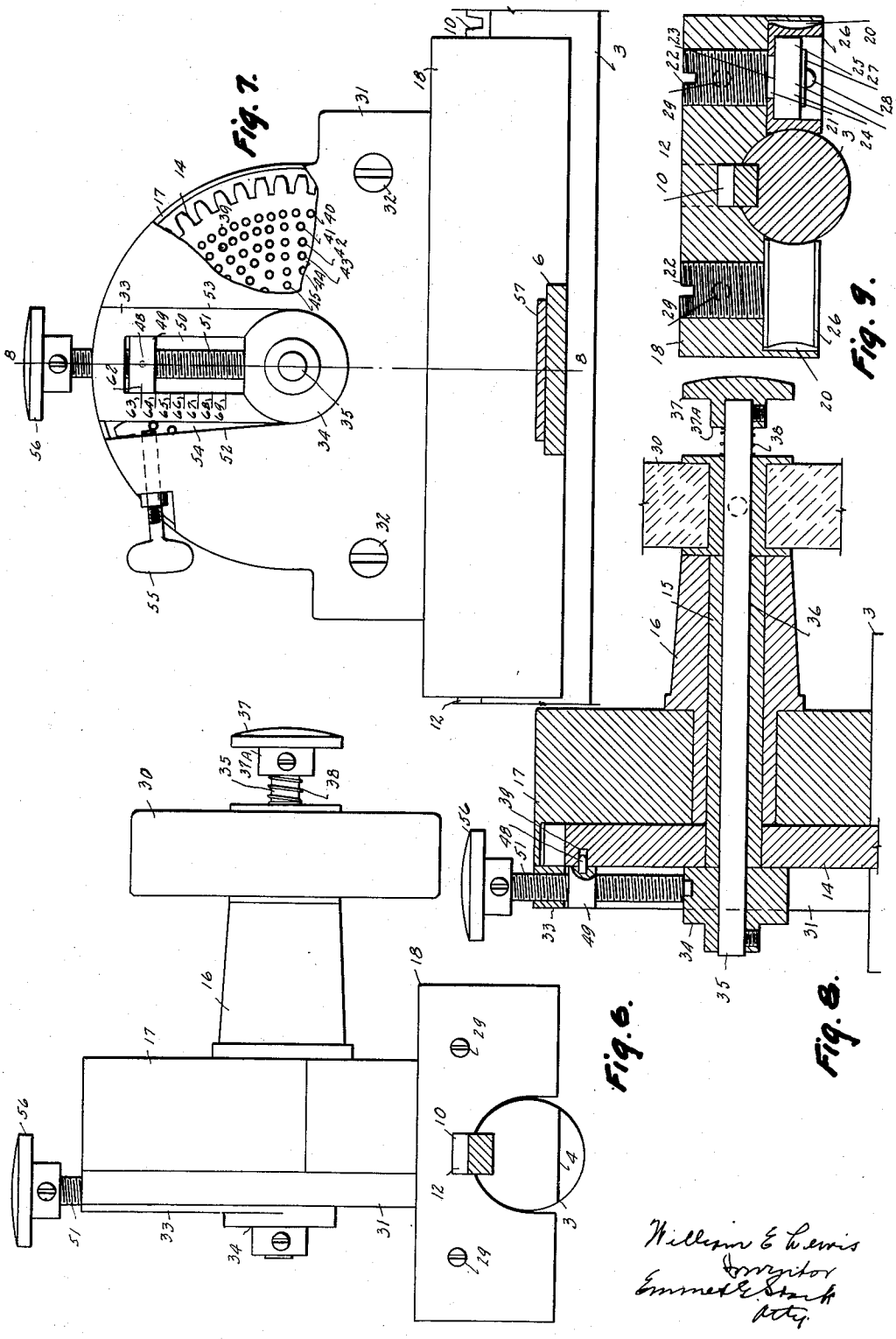

Fig. 7.

Fig. 9.

Fig. 6.

Fig. 8.

William E. Lewis
Inventor
Emmett E. Stark
Atty.

Nov. 3, 1953 W. E. LEWIS 2,657,467

APPARATUS FOR RULING NEGATIVES IN PHOTOLITHOGRAPHIC ART

Filed April 20, 1951 3 Sheets-Sheet 3

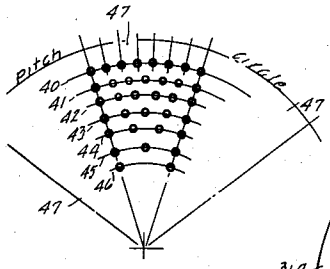

Fig. 13.

Fig. 10.

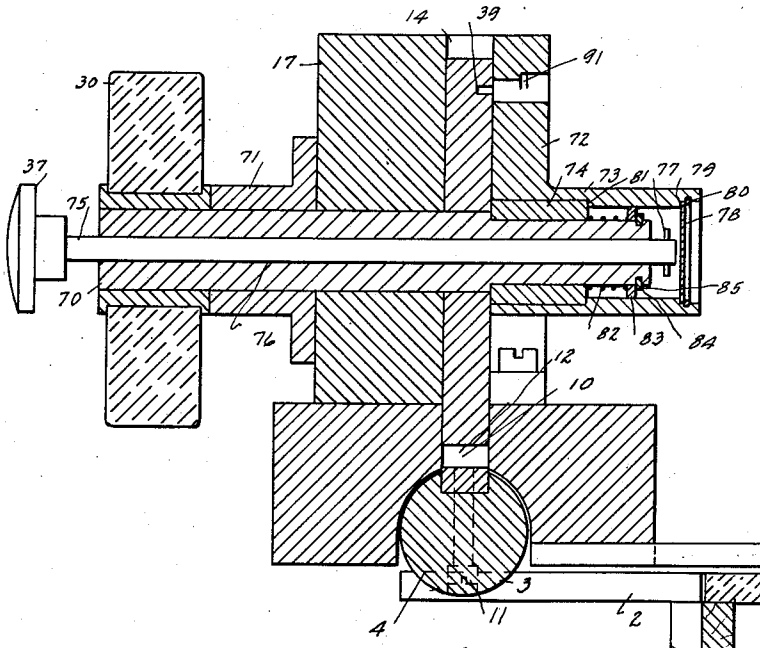

Fig. 11.

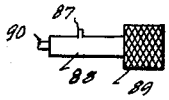

Fig. 12.

William E. Lewis
Inventor
Emmet A. Stock
Atty.

Patented Nov. 3, 1953 2,657,467

UNITED STATES PATENT OFFICE

2,657,467

APPARATUS FOR RULING NEGATIVES IN THE PHOTOLITHOGRAPHIC ART

William E. Lewis, Portland, Oreg.

Application April 20, 1951, Serial No. 222,041

7 Claims. (Cl. 33—76)

1

This invention relates to an apparatus particularly adapted for carrying out various phases of the photolithographic art especially the ruling of negatives and particularly those requiring double lines as in ledger sheets.

The principal objective is to provide an inexpensive and simple apparatus.

Another objective is to provide for the accurate ruling of negatives for ledger sheets and the like which require double lines.

Other objectives and advantages will come to the surface as we proceed with the specification.

Work relating to the above art is usually laid out on a table having a hard unyielding top as glass or marble. Negatives are secured to the table top in many and various ways, no particular way being shown. Lines are cut into the negative surface with a special cutting tool. Horizontal lines and alignments are usually made with a T-square and vertical lines and alignments with triangles in conjunction with the T-square. The above method is more or less crude. To make it possible to do more accurate work and more of it many complicated devices have been designed. Many of these devices have become too costly, not only in dollars and cents but in time spent in setting and adjusting them.

In accordance with my objective I have developed an inexpensive simplified apparatus whose description follows:

This device is illustrated in the accompanying drawings in which Fig. 1 is a plan view; Fig. 2 is a vertical section on the line 2—2 of Fig. 1; Fig. 3 is an elevation of the eccentric pin of the horizontal blade roll; Fig. 4 is an end view of the right hand blade stop; Fig. 5 is a fragmentary portion of a ruled negative; Fig. 6 is a side view of the device; Fig. 7 is an end view; Fig. 8 is a vertical section on the center line 8—8 of Fig. 7; Fig. 9 is a vertical section thru the rack guide rolls on the line 9—9 of Fig. 1; Fig. 10 is an end view of a modified device; Fig. 11 is a vertical section on the center line 11—11 of Fig. 10; Fig. 12 is an elevation of the locking pin of the modified device; Fig. 13 shows a partial diagram for laying out the line spacing holes.

Throughout the drawings and the specification similar numerals refer to similar parts.

Fig. 11 shows the left hand edge of a glass top work table 1 to which is secured a supporting bracket 2 one for each end of the elongated cylindrical guide rod 3 whose ends are faced off

2

to form a wide contacting surface 4 so that the guide rod 3 may be prevented from rolling when secured to said brackets by the screws 5. The brackets 2 are mounted so that the bottom surface of the horizontal blade 6 is about $\frac{1}{32}$'' above the top of the table 1. The opposite end of this blade is provided with a roll 7 mounted on an eccentric pin 8 positioned in the end of the blade 6 formed to receive said roll 7 which may be raised or lowered by manipulating its eccentric mounting pin 8 to keep the blade 6 a desired distance above the table top to prevent scratching of a negative being cut.

The elongated cylindrical guide rod 3 has a keyway 9 milled in its upper face for the reception of a rack 10 secured to said guide rod by two or more of the screws 11. The rack teeth 12 project above the guide rod 3 to mesh with the machine cut teeth 13 of the spur gear 14 mounted on the hollow shaft 15 journalled in the trunnion bearing 16 press-fitted in the standard 17 which in turn is secured in place on the top face of the block 18 by the screws 19.

The block 18 is bored and milled to receive both the cylindrical guide rod 3 and the rack 10 over which the block 18 is movable. In the bottom face of the block 18 are formed four wells 20 two on each side of the guide rod 3. Into these wells 20 project the eccentric end 21 of the screws 22 threaded into the top face of the block 18. On this eccentric end 21 of the screws 22 is mounted the inner race 23 of the ball bearing 24 whose outer race 25 is positioned within the concave roll 26 and held therein by the washer 27 and the screw 28 threaded in the bottom end of the eccentric end of the screw 22. The concave rolls 26 are formed to the curvature of the guide rod 3 and are brought into intimate contact therewith by turning the screws 22 and are then held in this position by tightening the set screws 29 against said screws 22. See Fig. 9.

On one end of the hollow shaft 15 is secured a hand wheel 30 whereby said shaft 15 may be rotated and with it the gear 14. One side of the gear 14 is mounted in close juxtaposition to the standard 17 while its opposite side is in close juxtaposition to the cover plate 31 secured to the standard 17 by the screws 32 (Fig. 3). A sector portion of the cover plate 31 is cut out for the reception of a radial sector or arm 33 of like thickness whose hub 34 is secured to one end of a slidable rod 35 positioned in the bore 36 of the hollow shaft 15. The opposite end of the slidable rod 35 is provided with a button

head 37 to facilitate the endwise movement of the rod 35 and with it the radial arm 33. Between the hub 37A on the button head 37 and the handwheel 30 is positioned a compression spring 38 whose function is to keep or return the arm 33 into close juxtaposition with the face of the gear 14 adjacent thereto.

In the side of the gear 14 adjacent the cover plate 31 are drilled and reamed a plurality of holes 39 arranged in seven concentric circles as 40, 41, 42, 43, 44, 45, and 46, with the holes in each circle equally spaced apart, the spacing being arrived at as follows: Using a 51 tooth, 16 diametrical pitch gear, which has a pitch circumference of approximately 10", the circumference or pitch circle may be divided into 10 equal parts each having a length of 1" on the pitch circle. One of these parts 47 is shown in the diagram, Fig. 13, on which is also shown the hole circles 40 to 46 drawn ⅛" apart. The hole circle 40 is shown divided into 7 parts, the hole circle 41 into 6 parts, the hole circle 42 into 5 parts, the hole circle 43 into 4 parts, the hole circle 44 into 3 parts, the hole circle 45 into 2 parts. The hole circle 46 has no divisions, but is equal to 1 part or rather represents 1 part 47. To divide the hole circle 40 into 7 parts the pitch circle is divided into 7 parts and radial lines are drawn thru the points established on the pitch circle and thru the hole circle 40 thus dividing it into 7 equal parts regardless of what its diameter may be. The same method is followed in laying out the holes in the other hole circles.

It is apparent that since the pitch circumference of the gear 14 is 10" it will roll along the rack 10 a distance of 10" for each revolution of said gear 14 or, in other words, 70 divisions of the hole circle 40 or 70⅐ths of an inch. Since the block 18 moves when the gear 14 is rotated and the horizontal blade 6 is secured to said block 18, 70 lines ⅐ of an inch apart could be ruled on a negative with one revolution of the gear 14. As long as the gear 14 is not pinned to the radial arm 33, which it may be thru the agency of the locking pin 48, it may be freely rolled back and forth on the rack 10 by rotating the hand wheel 30. The locking pin 48 projects from the pin carrier 49 on its side adjacent the gear 14 and may enter any of the holes 39 with which it centers thereby arresting further movement of the gear 14. The pin carrier 49 is formed to be slidable in the slot 50 in the radial arm 33 and is movable therein by the screw 51 upon which it is threaded and by which the locking pin 48 may be aligned with any of the holes 39 in any of the hole circles 40 to 46. The locking pin 48 may be forced out of any hole 39 which it has entered by endwise pressure on the button head 37 and it may be forced into any hole 39 with which it centers by the tension stored up in the compressed spring 38.

The radial arm 33 is made to permit circumferential movement of about ⅛" between the radial boundaries 52 and 53 of the sector portion 54 removed from the cover plate 31. The above mentioned movement may be further restricted by the adjustment of the back lash adjusting screw 55. Normally the radial arm 33 remains in contact with the sector boundary 53 since the rotation of the gear 14 is normally in that direction.

To carry out the ruling of say seven lines to the inch with $\frac{1}{32}$" between double lines the locking pin 48 is brought into alignment with the holes 39 on the hole circle 40 by rotating the button head 56 on the screw 51, and by rotating the back lash adjusting screw 55 the backward movement of the radial arm 33 may be limited to $\frac{1}{32}$" or to any other degree within the range provided. When the device has been adjusted as desired the operator removes the locking pin 48 from a hole 39 it may be in by exerting endwise pressure on the button head 37 and then rotating the hand wheel 30 while at the same time releasing the pressure on the button head 37 to permit the spring 38 to force the locking pin 48 into the first hole 39 encountered. If a double line is desired the hand wheel 30 is rotated in the opposite direction until the radial arm contacts the back lash adjusting screw 55.

It will be apparent that if the holes 39 on each of the hole circles 40 to 46 were properly laid out the spacing of each line will be the same which is one of my objectives. It follows then that when a negative is ruled the lines may be touched up by rotating the hand wheel in the opposite direction—another objective. Since the backward movement of the radial arm 33 is against a positive stop all guess work in the spacing of double lines is removed—another objective.

The blade 6 is provided with a scale 57 to facilitate the laying out of work. Slidable over this blade 6 is a head 58 having a vertical blade 59 positioned at right angles to the blade 6. This blade 59 may be provided with a scale also if desired. However, I prefer to turn the negative and use the horizontal blade 6. The blade 6 may be brought into alignment with the table edge or with stop pins generally used on layout tables by adjusting the guide rod 3 on its supporting brackets 2 one of which is slotted for the screw 5.

On the blade 6 is mounted two stops 60 to limit movement of the tool being used to cut the negative. One of these stops is shown with one right hand and one left hand being provided. They are bevelled on the ruling edge 61 with the bottom of the bevel being on the left for the right hand stop and vice versa for the left hand stop.

On the pin carrier 49 is cut a line 62 and on the radial arm the lines 63, 64, 65, 66, 67, 68, and 69, which are so positioned that when the line 62 is opposite say the line 63 the locking pin 48 may enter any of the holes 39 on the hole circle 40.

The device described above admits of many modifications one in particular being illustrated in Figs. 10, 11, and 12, which will now be described.

This modified version is mounted on the layout table 1 as has already been described. The guide rod 3, the rack 10, the gear 14, and the block 18 with its concave guide rolls 26, are similar to those same items in the first version. The gear 14 is mounted on a hollow shaft, to which I will assign the numeral 70, journalled in the trunnion bearing 71 formed to be fastened to the standard 17 by screws, not shown. The standard 17 is mounted on the block 18 with one face in close juxtaposition to one side of the gear 14 shown provided, in this instance, with only five hole circles or 40, 41, 42, 43, and 44, on which are spaced the holes 39 whose position was determined as previously described with reference to Fig. 11. The cover plate 31 has been divided into two portions each secured to the block 18. These two portions 31A and 31B have been separated for the reception of the radial arm, assigned the numeral 72, therebetween, whose hub 73 is mounted on the bushing 74 slidably mounted on

the hollow shaft 70 which extends thru and beyond said bushing 74. The handwheel 30 is mounted on the opposite end of said hollow shaft 70 and functions as and for the purpose previously set forth. In the present instance, the slidable rod, assigned the numeral 75, is positioned in the bore 76 of the hollow shaft 70 and extends thru and beyond the same and is confined thereto by the button head 37 on one end and a pin 77 on the end adjacent a disk 78 held against the shoulder 79, formed by counterboring the end of the hub 73, by the spring washer 80. This hub 73 is further counterbored up to the bushing 74 which forms a shoulder 81 for confining the compression spring 82 between it and a disk 83 mounted on the end of the hollow shaft 70 and held in place thereon by the spring washer 84 positioned in the groove 85 formed in said hollow shaft 70.

The cover portions 31A and 31B are positioned to provide the radial boundaries 52 and 53 which are spaced apart to permit about a ⅛'' circumferential movement of the radial arm 72 whose circumferential movement may be further restricted by the back-lash adjusting screw 55 as and for the purpose previously set forth. The radial arm 72, in this instance, is provided with five holes as 86 spaced from the center of the hollow shaft 70 on the same radius as the hole circle they cooperate with. Each of the holes 86 is enlarged on the top side to receive the key 87 on the locking pin carrier 88 which is provided with a knurled head 89 on one end and a reduced or locking pin portion 90 on the other end adapted to be received in any of the holes 39 on any of the hole circles 40 to 44. Endwise pressure on the button head 37 forces the rod 75 against the disk 78 which causes the hub 73 and its radial arm 72, and incidently the locking pin portion 90, to move away from the gear 14 whereupon the gear 14 may be rotated thru the agency of the hand wheel 30 until the next hole 39 is centered with said locking pin 90. The locking pin carrier 88 is held in place by turning the key 87 into a groove 91 provided in one portion of each hole 86.

With very little practice one becomes very efficient in handling the device which produces accurate work without guess work.

Many deviations may be made in the parts or their arrangement without departing from the basic idea and I therefore do not limit myself to the preferred or first described device or to the version last described but extend the invention to all that comes fairly within the scope of the appended claims.

What I claim as new is:

1. In an apparatus for ruling negatives in the photolithographic art, a hollow shaft, a gear mounted thereon having a plurality of holes in one side thereof arranged in a plurality of concentric circles, a radial arm axially mounted with reference to said shaft, a pin carried by the radial arm and adapted to be moved into alignment with a desired hole circle, a spring to urge the pin to enter a hole in said hole circle when centered therewith, and a rod slidable in said hollow shaft to move the pin out of the hole.

2. In an apparatus for ruling negatives in the photolithographic art, a rack, a block movable over the rack, a ruling blade attached to the block, a standard on the block, a cover plate attached to the standard formed with spaced apart portions which constitute a pair of stops, a hollow shaft journalled in the standard, means to rotate the shaft, a gear on said shaft in mesh with the rack having a plurality of holes in one side thereof arranged in a plurality of concentric circles those in each circle equally spaced a predetermined distance apart, a radial arm movable axially with respect to the shaft and circumferentially between the stops one of which limits the circumferential movement of said radial arm in a forward direction and the other said movement in a backward direction, means in connection with the backward movement stop to fix the desired limit of said backward movement of the radial arm, a locking pin carried by the radial arm adapted to be moved into alignment with a desired hole circle, a spring to move said arm axially toward the gear to permit the locking pin to enter a hole in said hole circle when centered therewith, and a rod slidable in said hollow shaft to move the radial arm away from the gear to remove the locking pin therefrom to permit the gear to be rotated independent of the arm.

3. Such an apparatus for ruling negatives in the photolithographic art as set forth in claim 2 but with a handwheel to rotate the hollow shaft positioned on one end thereof and with the spring-resisted slide rod within said hollow shaft extended from the same end to permit the operator to rotate the handwheel and apply pressure to the rod end at the same time with the same hand.

4. In an apparatus for ruling negatives in the photolithographic art, a rack, a block movable over the rack, a line ruling means movable with the block, a hollow shaft mounted on said block, a gear on said shaft in mesh with the rack having a plurality of holes in one face thereof, a handwheel to rotate the gear, a radial arm mounted for axial and circumferential movement with respect to the shaft, a stop secured to the block to limit the normal forward position of the radial arm, a pin carried by the arm adapted to be moved into alignment with a desired hole circle, a spring to urge the arm axially toward the gear to permit the pin to enter a hole in said hole circle when centered therewith to arrest the forward rotation of the gear, a rod slidable within the hollow shaft to move the arm axially away from the gear and the pin from said hole, a second stop spaced from the first mentioned stop to limit the distance the arm may be moved in the opposite direction when pinned to the rear and rotated therewith.

5. Such an apparatus for ruling negatives in the photolithographic art as set forth in claim 4 but with an arm contacting screw positioned in the second mentioned stop and adjustable to limit the backward circumferential movement of the arm to the desired distance.

6. In an apparatus for ruling negatives in the photolithographic art, in combination, a rack, a block having a ruling blade attached thereto movable over the rack, a rotatable shaft carried by the block, means for its rotation, a gear mounted on said shaft adjacent the block in mesh with the rack, a cover plate secured to the block having spaced apart portions, a radial arm mounted for axial and circumferential movement with respect to said shaft between the cover plate portions, the distance between said portions being greater than the width of the arm to permit circumferential movement of said arm, and means mounted on one portion of said cover plate to limit said circumferential movement of the arm to a desired degree.

7. In an apparatus for ruling negatives in the photolithographic art, in combination, a rack, a block movable over the rack having ruling means

attached, a gear carried by the block in mesh with the rack and having indexing holes therein, a radial arm mounted for axial and circumferential movement with respect to the gear, means movable with the block to limit the circumferential movement of the arm to a desired degree, a pin carried by the arm to engage gear indexing holes, resilient means to urge the arm axially toward the gear to permit the pin to enter a gear hole and hence the rotation of the arm with the gear, and manually operated means to move the arm axially away from the gear and the pin from the hole and hence the rotation of the gear free of the arm.

WILLIAM E. LEWIS.

References Cited in the file of this patent

UNITED STATES PATENTS

Number	Name	Date
304,521	Gardam	Sept. 2, 1884
333,631	Holz et al.	Jan. 5, 1886
918,065	Low	Apr. 13, 1909
1,312,277	Shields et al.	Aug. 5, 1919
1,469,051	Poitras	Sept. 25, 1923
2,403,633	Browning	July 9, 1946
2,421,686	Dodge	June 3, 1947
2,452,544	Brodie	Nov. 2, 1948