(12) INTERNATIONAL APPLICATION PUBLISHED UNDER THE PATENT COOPERATION TREATY (PCT)

(19) World Intellectual Property Organization
International Bureau

(43) International Publication Date
19 June 2008 (19.06.2008)

PCT

(10) International Publication Number
WO 2008/073874 A1

(51) International Patent Classification:
E21B 7/00 (2006.01)

(21) International Application Number:
PCT/US2007/086938

(22) International Filing Date:
10 December 2007 (10.12.2007)

(25) Filing Language: English

(26) Publication Language: English

(30) Priority Data:
11/609,585 12 December 2006 (12.12.2006) US

(71) Applicant *(for all designated States except US)*: **HYDRIL LLC** [US/US]; 3300 North Sam Houston Parkway East, Houston, TX 77032 (US).

(72) Inventors; and

(75) Inventors/Applicants *(for US only)*: **JUDA, John, David** [US/US]; 12815 Shady Knoll, Cypress, TX 77429 (US). **CHAUVIERE, Eugene, Charles** [US/US]; 13803 Carrington Lane, Cypress, TX 77429 (US).

(74) Agents: **LIANG, T., Chyau** et al.; Osha . Liang LLP, 1221 Mckinney St., Suite 2800, Houston, TX 77010 (US).

(81) Designated States *(unless otherwise indicated, for every kind of national protection available)*: AE, AG, AL, AM, AT, AU, AZ, BA, BB, BG, BH, BR, BW, BY, BZ, CA, CH, CN, CO, CR, CU, CZ, DE, DK, DM, DO, DZ, EC, EE, EG, ES, FI, GB, GD, GE, GH, GM, GT, HN, HR, HU, ID, IL, IN, IS, JP, KE, KG, KM, KN, KP, KR, KZ, LA, LC, LK, LR, LS, LT, LU, LY, MA, MD, ME, MG, MK, MN, MW, MX, MY, MZ, NA, NG, NI, NO, NZ, OM, PG, PH, PL, PT, RO, RS, RU, SC, SD, SE, SG, SK, SL, SM, SV, SY, TJ, TM, TN, TR, TT, TZ, UA, UG, US, UZ, VC, VN, ZA, ZM, ZW.

(84) Designated States *(unless otherwise indicated, for every kind of regional protection available)*: ARIPO (BW, GH, GM, KE, LS, MW, MZ, NA, SD, SL, SZ, TZ, UG, ZM, ZW), Eurasian (AM, AZ, BY, KG, KZ, MD, RU, TJ, TM), European (AT, BE, BG, CH, CY, CZ, DE, DK, EE, ES, FI, FR, GB, GR, HU, IE, IS, IT, LT, LU, LV, MC, MT, NL, PL, PT, RO, SE, SI, SK, TR), OAPI (BF, BJ, CF, CG, CI, CM, GA, GN, GQ, GW, ML, MR, NE, SN, TD, TG).

Published:
— *with international search report*
— *before the expiration of the time limit for amending the claims and to be republished in the event of receipt of amendments*

(54) **Title:** DUAL-DIRECTION RAM-TYPE BLOWOUT PREVENTER SEAL

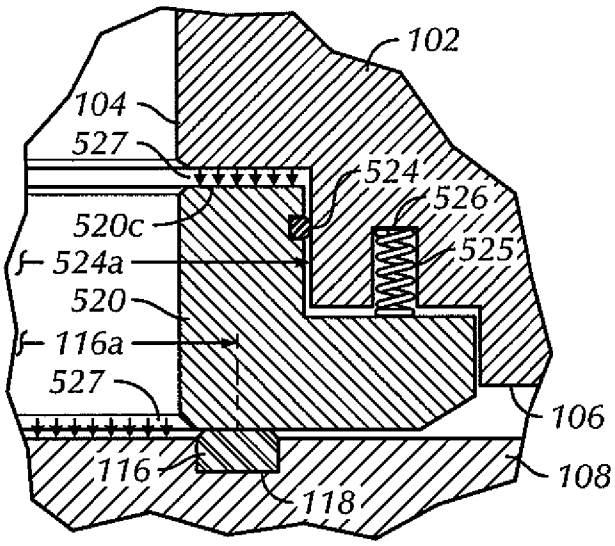

(57) **Abstract:** A ram-type blowout preventer and method of actuating thereof. The ram-type blowout preventer includes a seal carrier disposed about a vertical bore between the body and adjacent to the horizontal bore. The seal carrier is configured to be thrust into sealing engagement with at least one of a pair of ram blocks of the ram-type blowout preventer by fluid pressure above the ram blocks and a sealing device forms a seal between the body and the seal carrier.

WO 2008/073874 A1

DUAL-DIRECTION RAM-TYPE BLOWOUT PREVENTER SEAL

CROSS-REFERENCE TO RELATED APPLICATIONS

[0001] The present application claims priority to U.S. Patent Application Serial No. 11/609,585, filed on December 12, 2006, and entitled "Dual-Direction Ram-Type Blowout Preventer Seal." The Priority application is expressly incorporated herein by reference in its entirety.

BACKGROUND

Field of the Disclosure

[0002] Embodiments disclosed herein generally relate to blowout preventers used in the oil and gas industry. Specifically, selected embodiments relate to an improved seal carrier for use in ram-type blowout preventers, in which the seal carrier is configured to be displaced along an axis of the ram-type blowout preventer.

Background Art

[0003] Well control is an important aspect of oil and gas exploration. When drilling a well, for example, safety devices must be put in place to prevent injury to personnel and damage to equipment resulting from unexpected events associated with the drilling activities.

[0004] Drilling wells involves penetrating a variety of subsurface geologic structures, or "formations." Occasionally, a wellbore will penetrate a formation having a formation pressure substantially higher than the pressure maintained in the wellbore. When this occurs, the well is said to have "taken a kick." The pressure increase associated with a kick is generally produced by an influx of formation fluids (which may be a liquid, a gas, or a combination thereof) into the wellbore. The relatively high-pressure kick tends to propagate upwards from a point of entry in the wellbore towards the surface (from a high-pressure region to a low-pressure region). If the kick is allowed to reach the surface, drilling fluid, well tools, and other drilling structures may be blown out of the wellbore. Such "blowouts" may result in catastrophic destruction of the drilling equipment (including, for example, the drilling rig) and substantial injury or death of rig personnel.

[0005] Because of the risk of blowouts, devices known as blowout preventers ("BOPs") are installed above the wellhead at the surface or on the sea floor in deep water drilling arrangements to effectively seal a wellbore until active measures can be taken to control the kick. There are several types of blowout preventers, the most common of which are annular blowout preventers (including spherical blowout preventers) and ram-type blowout preventers. Blowout preventers may be activated so that kicks are adequately controlled and "circulated out" of the system. In deep water drilling, BOPs are conventionally used in an assembly called a "subsea BOP stack", or simply a "subsea stack", so-called because a number of BOP are "stacked-up" (that is, joined together) in an assembly, commonly with 4, 5, or 6 ram-type BOPs stacked-up below one or two annular BOPs. The large number of BOPs in a subsea stack affords redundancy which, for example, may allow the stack to remain on the seabed for an extended period.

[0006] Referring initially to Figure 1, a schematic of a subsea BOP stack **10** is shown. Subsea BOP stack **10** includes a lower double ram BOP assembly **11**, a middle double ram BOP assembly **12**, and an upper double ram BOP assembly **13**. Furthermore, subsea BOP stack **10** includes spools **14** and an annular BOP **15**. Each double ram assembly comprises two ram BOPs (or "cavities") in a single body; consequently this stack comprises the equivalent of six conventional "single" ram BOPs and would be said to "have six ram cavities".

[0007] Referring now to Figure 2, an example of a typical conventional ram-type blowout preventer **100** is shown. Ram-type BOP **100** includes a BOP body **102** having a vertical bore **104** (*i.e.*, the "wellbore") and a horizontal bore **106**. Vertical bore **104** is disposed about a vertical axis **105**, and horizontal bore **106** is disposed about an axis **107** substantially perpendicular to axis **105**. A joint of pipe **111** is shown disposed in vertical bore **104**. Ram-type blowout preventer **100** further includes ram blocks **108** disposed within horizontal bore **106** on opposite sides, attached to piston actuated rods **112**, and bonnets **110** which may be removably secured to BOP body **102** to enable removal of bonnets **110** for maintenance.

[0008] When ram-type blowout preventer **100** is actuated, ram blocks **108** displace along horizontal axis **107** toward vertical bore **104**. Rams blocks **108** may either be pipe rams (shown) or variable bore rams, shear rams, blind rams, or any other

known to those having ordinary skill in the art. Pipe and variable bore rams, when activated, move to engage and surround drillpipe and/or well tools to seal the wellbore. In contrast, shear rams engage and physically shear any wireline, drillpipe, and/or well tools in vertical bore **104**, whereas blind rams close vertical bore **104** when no obstructions are present. More discussion of ram blowout preventers may be found in U.S. Patent 6,554,247, issued to Berckenhoff, assigned to the assignee of the present invention, and incorporated herein by reference in its entirety.

[0009] As with any tool used in drilling oil and gas wells, blowout preventers must be sealed and secured to prevent potential hazard to the surrounding environment and personnel. For example, ram-type blowout preventers may include high-pressure seals between the bonnets and the body of the blowout preventer to prevent leakage of fluids. In many instances, the high-pressure seals are elastomeric seals and should be checked regularly to ensure that the elastomeric components have not been cut, permanently deformed, or deteriorated by, for example, a chemical reaction with the drilling fluid in the wellbore.

[0010] Referring still to Figure 2, ram-type blowout preventer **100** includes top seals **116** disposed within grooves **118** of ram blocks **108**, which are sealingly connected to front seals (or "ram packers") **109**. In the case of pipe rams, when ram blocks **108** are closed as shown, the combination of the top seals **116** (which seal between the top of ram blocks **108** and the top of horizontal bore **106**), and the front seals **109** (which seal completely around pipe in the vertical bore **104**) completes the sealing of the annulus between the pipe **111** and the vertical bore **104**. In the case of shear rams and blind rams, when ram blocks **108** are closed, the front seals **109** seal against one another rather than an object in the wellbore, and the combination of the top seals **116** and the front seals **109** completes the sealing-off of the open wellbore.

[0011] Conventionally, ram blocks **108** have a pressure equalization path in the form of a groove **101** (sometimes called a "mud slot") machined into the bottom surface of the ram block to communicate fluid pressure between the vertical bore **104** below the front seals **109** and the respective volumes of the horizontal bore **106** behind the ram blocks. Thus each ram block **108** may be displaced back and forth in the horizontal bore **106** without having to work against fluid pressure

differentials between the volume behind the ram blocks **108** and the vertical bore **104** below the front seals **109**. Those skilled in the art will of course recognize that fluid pressure communication for pressure equalization between the vertical bore **109** and the volumes behind the ram blocks **108** may be accomplished by other means besides a machined groove in the bottom of the ram blocks **108**, such as drilled passageways in the ram blocks, a milled slot in the bottom of the horizontal bore **106**, or even a conduit external to the housing **102**, or the like.

[0012] Referring now to Figure 3, an enlarged cross-sectional view of a top seal wear plate **120** of a ram BOP is shown. Because the top surface of horizontal bore **106** may wear with repeated use of the ram BOP, modern ram BOPs may be fitted with replaceable top seal wear plates to avoid expensive repair of the horizontal bore **106**. Top seal wear plate **120** is immovably secured to housing **102** with, for example, bolts **122** and collet-type inserts **122A**, and includes a sleeve portion **120A** and a flange portion **120B** extending radially outward with respect to wellbore axis 105. Additionally, as shown, top seal wear plate **120** is adjacent to ram block **108** and seals against housing **102** to prevent, in conjunction with top seal **116**, leakage between housing **102** and ram blocks **108**. Typically, an o-ring **124** is disposed in a groove **126** of flange portion **120B** of top seal plate **120** to sealingly engage (as a face seal) against housing **102** and prevent leakage of high-pressure fluids between housing **102** and seal carrier **120**.

[0013] Since the primary function of ram-type BOPs is to prevent the escape of fluids from the wellbore, many ram-type BOPs only seal in a single direction. Thus, a ram-type BOP may only seal to isolate pressurized fluids from the wellbore to the environment and will not typically include a bidirectional seal; capable of sealing against a differential pressure from above the BOP.

[0014] For example, when ram blocks **108** are engaged with one another and sealing against high-pressure fluids from above, the high-pressure fluids may act upon the top surface of ram blocks **108** and urge them downward. Such urging may cause ram blocks **108** to move downward and out of sealing engagement with the top of the horizontal bore **106** (or alternately, in a ram BOP so equipped, with seal carrier **120**).

[0015] Formerly, deploying a ram-type BOP having a single direction seal was not considered to be a shortcoming, as there was no reason for a BOP to seal against pressure from above. However, it is now common in deepwater drilling installations for regulatory agencies (*e.g.*, the Minerals Management Service ("MMS"), of the United States Department of the Interior, which regulates offshore drilling for oil and gas in U.S. territorial waters) to require periodic testing of the integrity of individual ram BOPs against wellbore pressures while the subsea stack is located on the seabed.

[0016] Previously, such *in situ* BOP testing may have been accomplished through one of two test methods. In a first test method, a test tool is lowered through the subsea BOP stack on a string of pipe, and anchored below the lowest BOP in the stack. The test tool is actuated to seal off the wellbore at that point (as, for example, by inflating an inflatable packer), and a BOP to be tested is closed. Then, fluid pressure is communicated into the annular space around the pipe above the test tool and below the BOP being tested. After testing, the pipe string and test tool are withdrawn from the wellbore, and normal drilling operations can be resumed.

[0017] However, such a method may be extremely costly in terms of rig time. In an alternative test method, the subsea BOP stack may include an additional ram BOP installed in an inverted operating position at the bottom of the subsea BOP stack. Thus, the inverted BOP may seal against test pressure introduced thereabove. However, in placing the additional BOP in an inverted position at the bottom of a subsea BOP stack, the additional ram "cavity" may will not seal against wellbore pressure and thus may not be used as a regular BOP during operations. Furthermore, the additional BOP may also increase the height, weight and cost of a subsea BOP stack.

[0018] Consequently, it may be advantageous to have a ram BOP having the ability to seal in both directions on the seabed so that the BOP stack may be tested without running a dedicated test tool into the well. Furthermore, such a dual direction ram BOP will allow the BOP stack to be tested without requiring a dedicated inverted cavity for testing purposes. Further, because of the large number of subsea BOP stacks in existence, it may also be advantageous to have an inexpensive apparatus and method to modify existing ram-type BOPs so they could seal in both directions.

[0019] One device currently capable of effecting a bi-directional seal of a bore or conduit, for example in a gate or ball valve, involves separate seals (either metal-to-metal seals or deformable seals) on either side of a movable pressure barrier, whereby each seal acts independently of the other to seal-off pressure from one direction or the other.

[0020] However, ram BOPs attempting this "double-seal" approach may disadvantageously trap pressurized fluid behind the ram block, thereby effectively hydraulically locking the ram block. Additionally, the "bottom" sealing mechanism may add complexity and manufacturing expense. Furthermore, because the heavy weight of the ram blocks and the abrasive nature of the wellbore fluid, such a on a ram BOP may have limited working life.

[0021] A ram BOP having bi-directional sealing rams is disclosed in U.S. Patent No. 4,655,431, issued to Helfer, *et al*, and incorporated by reference herein in its entirety. The ram BOP of Heifer comprises circumferential seals around the ram blocks wherein passages within the ram blocks between the face and rear of the ram blocks, both above and below the front seal, and valve means within the ram blocks allow flow through the passages only from the front to the rear of the ram block. Such a design is alleged to hold pressure equally from either direction.

[0022] Additionally, a ram BOP having bidirectional sealing rams is disclosed by U.S. Patent No. 6,124,619, issued to Van Winkle, *et al*, and incorporated herein by reference in its entirety. In lieu of conventional seals, the ram BOP of Van Winkle includes ram block seals which go all the way around the ram block to seal the space behind the rams. In addition, a mechanism is provided to selectively connect the volume behind the rams with the more highly pressurized wellbore volume adjacent to the rams (either above or below). The connection made is free-flowing in both directions thereby allowing for evacuation and fluctuations with changes in wellbore pressure.

[0023] Furthermore, a BOP having bidirectional sealing rams is taught is U.S. Patent 6,719,262, issued to Whitby, *et al,* and incorporated herein by reference in its entirety. This BOP of the Whitby patent includes top seals and bottom seal and, in order to mitigate the issues of fluid trapped behind the ram blocks, includes two fluid communication systems. The first communication system is a selectively

operable system to equalize the pressure behind the back of each ram with the fluid pressure below the ram packers. The second communication system includes a selectively operable fluid communications system for equalizing fluid pressure between the back of each ram with the fluid pressure above the ram packers. As such, each selectively operable fluid control system includes a control unit connected to it for such "selective" operation.

[0024] All prior-art solutions rely on completely sealing-off the ram block within the horizontal bore and equalizing the pressure differential between the wellbore (above or below the ram blocks) and the volumes behind the ram blocks. These systems are relatively complicated and expensive, the pressure balancing passageways may be prone to plugging (*e.g.*, by drilled cuttings in the drilling mud), and failure of certain pressure-equalizing valve components may provide an open conduit from the wellbore below the ram blocks to the wellbore above the ram blocks. More critically, if the pressure-equalization mechanisms fail (whether, for example, by plugged passageways or the failure of a valving component) while operating in a subsea stack, the cessation of drilling operations, killing the well, and pulling the entire subsea stack to the surface for repairs would likely be required. Therefore, it would be desirable to have a bidirectional sealing ram BOP which does not require pressure equalization passages or valving. Additionally, it would also be desirable to have a ram BOP capable of sealing against bi-directional pressure using the existing ram block seals of "legacy" ram BOPs.

SUMMARY OF INVENTION

[0025] In one aspect, embodiments disclosed herein relate to a ram-type blowout preventer. The ram-type blowout preventer comprises a body, a vertical bore through the body, a horizontal bore through the body intersecting the vertical bore, and a pair of ram blocks disposed in the horizontal bore on opposite sides of the body, in which the ram blocks are adapted for controlled lateral movement to and from the vertical bore. The ram-type blowout preventer further includes a seal carrier disposed about the vertical bore between the BOP body and adjacent to the horizontal bore, in which the seal carrier is configured to be displaced along an axis of the vertical bore. The ram-type blowout preventer further includes a sealing device positioned between the body and the seal carrier.

[0026] In another aspect, embodiments disclosed herein relate to a ram-type blowout preventer. The ram-type blowout preventer includes a body, a vertical bore through the body, a horizontal bore through the body intersecting the vertical bore, and a pair of ram blocks disposed in the horizontal bore on opposite sides of the body, in which the ram blocks are adapted for controlled lateral movement to and from the vertical bore. The ram-type blowout preventer further includes a seal carrier disposed at the intersection of the vertical bore and the horizontal bore, in which the seal carrier is configured to be displaced along an axis of the vertical bore and to be sealingly engaged with a top seal of the at least one of the pair of ram blocks. The ram-type blowout preventer further includes a sealing device positioned between the body and the seal carrier.

[0027] Further, in another aspect, embodiments disclosed herein relate to a ram-type blowout preventer. The ram-type blowout preventer includes a body, a vertical bore through the body, a horizontal bore through the body intersecting the vertical bore, and a pair of ram blocks disposed in the horizontal bore on opposite sides of the body, in which the ram blocks are adapted for controlled lateral movement to and from the vertical bore. The ram-type blowout preventer further includes a seal carrier disposed at the intersection of the vertical bore and the horizontal bore, in which the seal carrier is configured to be thrust into sealing engagement with at least one of the pair of ram blocks by fluid pressure above the ram blocks. The ram-type blowout preventer further includes a sealing device positioned between the body and the seal carrier.

[0028] Further, in yet another aspect, embodiments disclosed herein relate to a method of actuating a ram-type blowout preventer. The method includes sealing a pair of ram blocks against one another proximate a wellbore axis and sealingly engaging a seal carrier with the pair of ram assemblies from fluid pressure acting upon the ram assemblies. The seal carrier is configured to be sealingly displaced along the wellbore axis.

[0029] Other aspects and advantages of the embodiments disclosed herein will be apparent from the following description and the appended claims.

BRIEF DESCRIPTION OF DRAWINGS

[0030] Figure 1 is a schematic drawing of a subsea BOP stack.

[0031] Figure 2 is a cross-sectional view of a ram-type blowout preventer.

[0032] Figure 3 is a cross-sectional view of a top seal plate for a ram-type blowout preventer available in the prior art.

[0033] Figure 4A is a cross-sectional view of a seal carrier for a ram-type blowout preventer in accordance with embodiments disclosed herein.

[0034] Figure 4B is a cross-sectional view of a alternative seal carrier for a ram-type blowout preventer in accordance with embodiments disclosed herein.

[0035] Figure 4C is a cross-sectional view of the seal carrier of Figure 4B shown in a pressurized condition.

[0036] Figure 4D is a cross-sectional view of a second alternative seal carrier for a ram-type blowout preventer in accordance with embodiments disclosed herein.

[0037] Figure 5 is a cross-sectional view of a seal carrier and ram blocks of a ram-type blowout preventer providing sealing engagement about a drill pipe in accordance with embodiments disclosed herein.

DETAILED DESCRIPTION

[0038] In one aspect, embodiments disclosed herein relate to a ram-type blowout preventer with an improved seal carrier. In another aspect, embodiments disclosed herein relate to a ram-type blowout preventer with a seal carrier which is configured to be displaced along an axis of a vertical bore of the ram-type blowout preventer. In another aspect, embodiments disclosed herein relate to a ram-type blowout preventer with a seal carrier which is configured to be thrust into sealing engagement with a top seal of a ram assembly of a ram-type blowout preventer.

[0039] Referring now to Figure 4A, a cross-sectioned view of a seal carrier **520** of a ram-type blowout preventer in accordance with embodiments disclosed herein is shown with ram blocks **108** in a "shut-in" position such that they are closed and sealing against wellbore pressure from below. Seal carrier **520** is disposed about vertical bore **104** between housing **102** and horizontal bore **106**, located at the

intersection of vertical bore **104** and horizontal bore **106**. Seal carrier **520** includes a sleeve portion **520A** and a flange portion **520B**. Furthermore, sleeve portion **520A** includes a sleeve top surface **520C** and an o-ring seal **524** disposed in a groove **526** on an outer surface of sleeve portion **520A**. Flange portion **520B** extends radially outward from sleeve portion **520A** with respect to wellbore axis **105** (not shown), and has flange top surface **520D**. Ram block **108** is shown in a "closed" position, that is, fully displaced into the vertical bore **104** such that the front seals (*e.g.*, **109 of Figure 2)** are in sealing engagement.

[0040] Furthermore, as shown, seal carrier **520** is radially constrained by BOP body **102**, but is free to move vertically within a prescribed range during operation of the ram BOP. In contrast, top seal wear plate **120** shown in Figure 3 is constrained and prohibited from having any axial movement by bolts **122** and collet-type inserts **122A**. Therefore, if ram blocks **108** are in a closed BOP position (as shown in Figure 4A), the upward travel of seal carrier **520** may be limited to preserve an effective seal by top seal **116**. As shown, upward travel may be limited by contact between flange top surface **520D** and body **102**. Similarly, lower travel, may be limited by the ram blocks themselves, or by other retaining methods known in the art. In any case, and at all positions of seal carrier **520**, surface **520C** must remain in fluid communication with the vertical bore **104** above the ram blocks **108**.

[0041] Referring still to Figure 4A, o-ring **524** may be characterized by an o-ring seal area **524A**, measured in a horizontal plane. Similarly, when the ram blocks are "closed" and front seals **109** are in sealing engagement, top seal **116** may be characterized by a top seal area **116A**, also measured in a horizontal plane. Those skilled in the art will recognize that while the effective o-ring seal area **524A** may be substantially circular, the effective top seal area **116A** may not be substantially circular. However, one of ordinary skill in the art will recognize that an average diameter of top seal area **116A** may be less than an average diameter of the o-ring seal area **524A**.

[0042] Further, those having ordinary skill in the art will recognize that while only a single o-ring seal is **524** shown in Figure 4A, other seal arrangements may be employed on seal carrier **520** without departing from the scope of the current invention. In one selected embodiment, seal carrier **520** may include additional o-

rings disposed between the housing of the ram-type blowout preventer and the seal carrier. For example, an o-ring in a groove may be provided on the flange portion **520B** of seal carrier **520**. Alternatively, other sealing devices may be used in conjunction with seal carrier **520** in place of o-rings. Particularly, seal assemblies having molded rubber adhered to seal carrier **520** and lip-type seals, may be used. Furthermore, in other embodiments, "trash seals" may be provided adjacent seal carrier **520** on BOP body **102** within bore **104** to prevent any debris (*e.g.*, grit, gravel, stones, pebble, dirt, sand) from invading the space between seal carrier **520** and BOP body **102**.

[0043] Referring now to Figure 4B, an alternative seal carrier **520** at an intersection between vertical bore **104** and horizontal bore **106** on one side of a ram-type BOP is shown. As shown in Figure 4B, ram block **108** is depicted in a fully-retracted ("open") position with a ledge **106A** on the lower surface of horizontal bore **106** and a corresponding recess in ram block **108**. When ram block **108** is retracted into horizontal bore **106** (*i.e.*, when vertical bore **104** is fully open), it drops-down off of ledge **106A**, relieving pressure on top seal **116** and prolonging seal life. Those skilled in the art will recognize that ledge **106** may be an integral part of BOP body **102**, or a separately renewable part.

[0044] In the embodiment shown in Figure 4B, seal carrier **520** is biased downward by at least one spring **525** disposed in a spring recess **526** of BOP body 102. Spring recesses **526** may be arranged radially about a vertical axis (not shown) such that a downward biasing force may be evenly applied to seal carrier **520**. As would be understood by those of ordinary skill, other mechanical biasing mechanisms (*e.g.*, an elastomeric ring disposed in a circumferential groove) may be used as well. In this embodiment, seal carrier **520** is restricted from further downward movement by ram block **108**

[0045] Furthermore, it should be noted that that in the embodiment shown in Figure 4B, ram block **108** may include a pressure equalization path in the form of a groove **101** (or "mud slot") machined into the bottom surface of ram block **108** to allow pressure communication between a portion of vertical bore **104** located below the front seals **109** and a volume of the horizontal bore **106** behind the ram block (not shown).

[0046] Referring now to Figure 4C, a cross-sectional view of seal carrier **520** of Figure 4B is shown with ram blocks **108** in a closed testing position. In the testing position, ram blocks **108** seal against wellbore pressure from above. As shown, wellbore pressure **527** acts downward upon a top surface of ram blocks **108** and causing ram blocks **108** to move down slightly. Because sleeve top surface **520C** is in fluid communication with vertical bore **104**, wellbore pressure also acts to thrust seal carrier **520** in a downward direction. As well bore is sealed off by front seals (*e.g.*, **109** of Figure 2), a seal is created between ram block **108** and the seal carrier **520** through top seal **116**, and a seal is created between seal carrier **520** and body **102** through o-ring **524.** Therefore, the net force pushing seal carrier downwards into contact with top seal **116** may be calculated as:

$$\text{Force} = (O_A - T_A) \times \text{WBP}; \qquad \text{(Eq. 1)}$$

where O_A is the o-ring seal area **524A**, T_A is the top seal area **116A**, and WBP is the wellbore pressure **527**.

[0047] Furthermore, if seal carrier **520** is mechanically biased downwards (as shown with springs **525**), the net force may also comprise the total downward force of biasing springs **525.** In selected embodiments, the o-ring seal area **524A** may exceed top seal area **116A** by 5% to insure adequate sealing at test pressure. In other embodiments, the differential between the sealing areas may be greater than 10%.

[0048] Referring now to Figure 4D, an alternative seal carrier **520** for a ram-type blowout preventer is shown engaged by ram blocks **108** in a closed sealing against wellbore pressure from below. As shown, seal carrier **520** includes a lip seal **524B** in lieu of o-ring seal **524** of Figures 4A–4C, and a plurality of screws **530** to limit the downward travel of the seal carrier **520**. Screws (*e.g.*, Allen-head cap screws) **530** may be threaded into BOP body **102** in a radial pattern opposite sleeve top surface **520C**. As shown, seal carrier **520** includes stepped holes **532** to accommodate screws **530** with springs **525** installed concentrically around them.

[0049] Furthermore, a plurality of set-screws **531** may be installed radially in seal carrier **520**. Thus, the lower limit of the downward travel of seal carrier **520** may be determined by the relative vertical positions of setscrews **531** and the heads of screws **530**. Downward mechanical bias is provided by springs **525**, which are

shown as coil springs, but which may be any appropriate device which generates a spring-force, such as Bellville washers or an elastomeric springs. In one embodiment, the biasing spring force may be provided by a thick resilient gasket between sleeve top surface **520C** and BOP body **102** with provision for screws **530** to pass therethrough. Advantageously, such a gasket may serve both as a biasing spring and as a trash seal.

[0050] Referring now to Figure 5, a cross-sectional view of the intersection of vertical bore **104** and horizontal bore **106** on both sides of a ram-type BOP with ram blocks **108** in a fully-extended ("closed") position, in "testing" mode with wellbore pressure **527** applied from above. As previously discussed, front seals **109** and top seals **116** are sealingly connected such that together, they seal off the vertical bore **104** completely when the ram BOP is closed. The extents of o-ring seal area **524A** and top seal area **116A** may be discerned as described above in reference to Figures 4A and 4C.

[0051] Those having ordinary skill in the art will appreciate that, although seal carrier **520** is shown positioned above a central axis of horizontal bore **106** in Figures 4A–4D and Figure 5, the present disclosure should not be so limited. Particularly, in selected embodiments, the seal carrier may be positioned below the horizontal axis such that the seal carrier may be thrust into sealing engagement with the ram blocks by high-pressure fluids from below.

[0052] Advantageously, a ram-type BOP fitted with a seal carrier in accordance with embodiments disclosed herein may seal against bi-directional pressure using only the existing top seals and front seals and one additional inexpensive seal behind the seal carrier. Furthermore, such a BOP may seal against such bi-directional pressure without expensive, troublesome, and complicated pressure-biasing mechanisms and methods. Further, seal carriers in accordance with the embodiments disclosed herein may be easily and inexpensively retrofitted to existing ram BOPs, thus allowing older BOP stacks to be tested *in situ* on the seabed inexpensively and quickly, and without dedicating a BOP "cavity" to testing.

[0053] While the invention has been described with respect to a limited number of embodiments, those skilled in the art, having benefit of this disclosure, will

appreciate that other embodiments may be devised which do not depart from the scope of the invention as disclosed herein. Accordingly, the scope of the invention should be limited only by the attached claims.

CLAIMS

What is claimed is:

1. A ram-type blowout preventer, comprising:

a body;

a vertical bore through the body;

a horizontal bore through the body intersecting the vertical bore;

a pair of ram blocks disposed in the horizontal bore on opposite sides of the body, wherein the ram blocks are adapted for controlled lateral movement to and from the vertical bore;

a seal carrier disposed about the vertical bore between the body and adjacent to the horizontal bore; and

a sealing device positioned between the body and the seal carrier;

wherein the seal carrier is configured to be displaced along an axis of the vertical bore.

2. The ram-type blowout preventer of claim 1, wherein the seal carrier is configured to sealingly engage a top seal of at least one of the pair of ram blocks.

3. The ram-type blowout preventer of claim 2, wherein a pressure seal area of the seal carrier is larger than a pressure seal area of the ram blocks.

4. The ram-type blowout preventer of claim 1, wherein the seal carrier comprises a sleeve portion and a flange portion.

5. The ram-type blowout preventer of claim 4, wherein the sealing device is disposed upon the sleeve portion.

6. The ram-type blowout preventer of claim 1, wherein the sealing device comprises at least one of an o-ring and molded rubber.

7. The ram-type blowout preventer of claim 1, further comprising a trash seal disposed adjacent the seal carrier.

8. The ram-type blowout preventer of claim 1, wherein the seal carrier is positioned above an axis of the horizontal bore.

9. The ram-type blowout preventer of claim 1, wherein the seal carrier is positioned below an axis of the horizontal bore.

10. A ram-type blowout preventer, comprising:

a body;

a vertical bore through the body;

a horizontal bore through the body intersecting the vertical bore;

a pair of ram blocks disposed in the horizontal bore on opposite sides of the body, wherein the ram blocks are adapted for controlled lateral movement to and from the vertical bore;

a seal carrier disposed at the intersection of the vertical bore and the horizontal bore; and

a sealing device positioned between the body and the seal carrier;

wherein the seal carrier is configured to be displaced along an axis of the vertical bore;

wherein the seal carrier is configured to be sealingly engaged with a top seal of at least one of the pair of ram blocks.

11. The ram-type blowout preventer of claim 10, wherein a pressure seal area of the seal carrier is larger than a pressure seal area of the ram blocks.

12. The ram-type blowout preventer of claim 10, wherein the seal carrier comprises a sleeve portion and a flange portion and the sealing device is disposed upon the sleeve portion.

13. A ram-type blowout preventer, comprising:

a body;

a vertical bore through the body;

a horizontal bore through the body intersecting the vertical bore;

a pair of ram blocks disposed in the horizontal bore on opposite sides of the body, wherein the ram blocks are adapted for controlled lateral movement to and from the vertical bore;

a seal carrier disposed at the intersection of the vertical bore and the horizontal bore; and

a sealing device positioned between the body and the seal carrier;

wherein the seal carrier is configured to be thrust into sealing engagement with at least one of the pair of ram blocks by fluid pressure above the ram blocks.

14. The ram-type blowout preventer of claim 13, wherein the seal carrier is configured to be thrust into sealing engagement with a top seal of the at least one of the pair of ram blocks.

15. The ram-type blowout preventer of claim 13, wherein a pressure seal area of the seal carrier is larger than a pressure seal area of the ram blocks.

16. The ram-type blowout preventer of claim 13, wherein the seal carrier comprises a sleeve portion and a flange portion, and the sealing device is disposed upon the sleeve portion.

17. A method of actuating a ram-type blowout preventer, the method comprising:

sealing a pair of ram blocks against one another proximate a wellbore axis; and

sealingly engaging a seal carrier with at least one of the pair of ram blocks from fluid pressure acting upon the ram blocks, wherein the seal carrier is configured to be sealingly displaced along the wellbore axis.

18. The method of claim 17, wherein the seal carrier sealingly engages with a top seal of the at least one of the pair of ram blocks.

19. The method of claim 17, wherein a pressure seal area of the seal carrier is larger than a pressure seal area of the ram blocks.

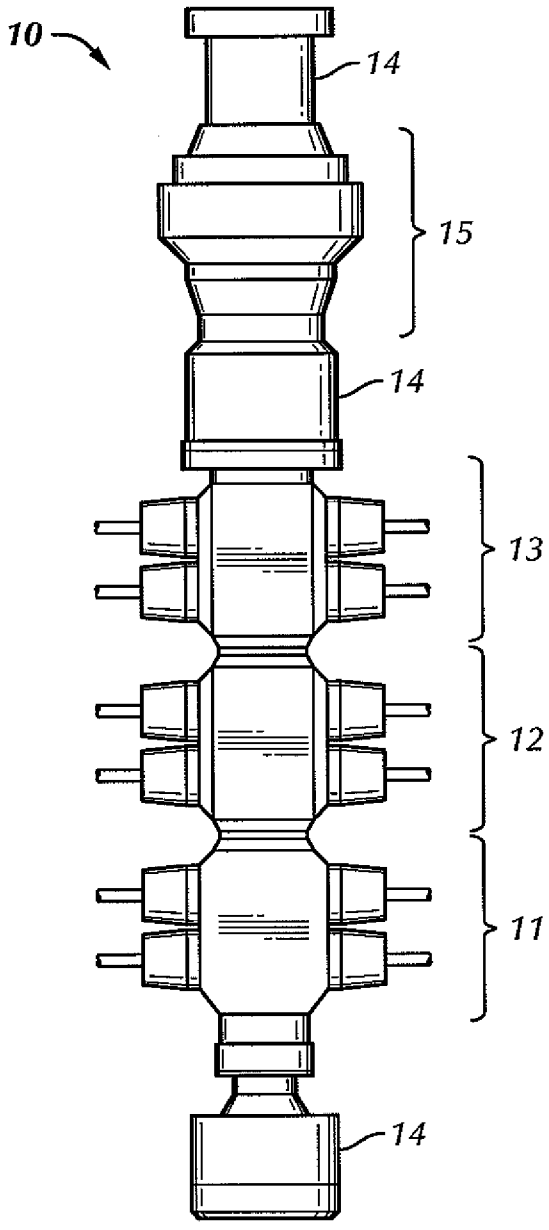

FIG. 1

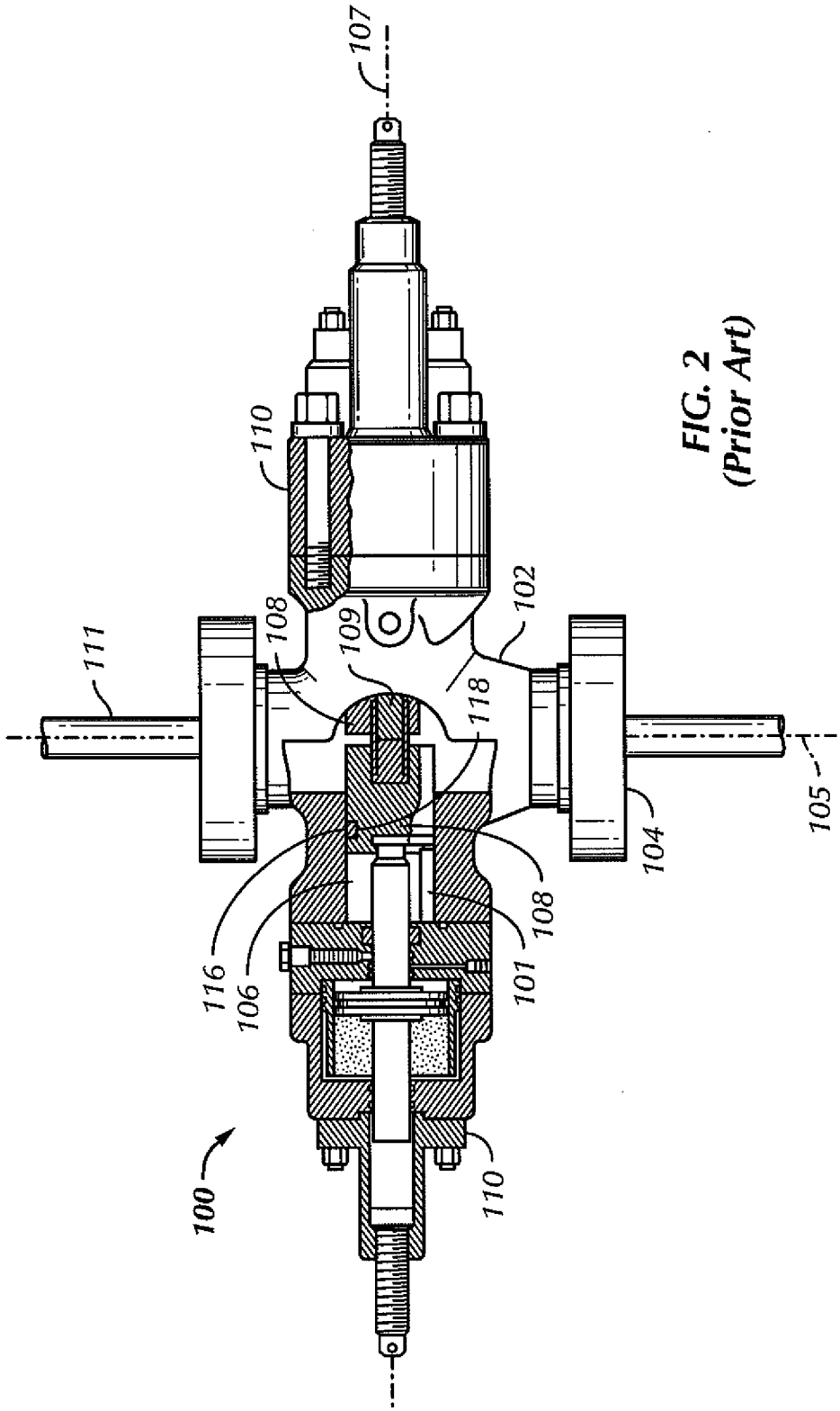

FIG. 2
(Prior Art)

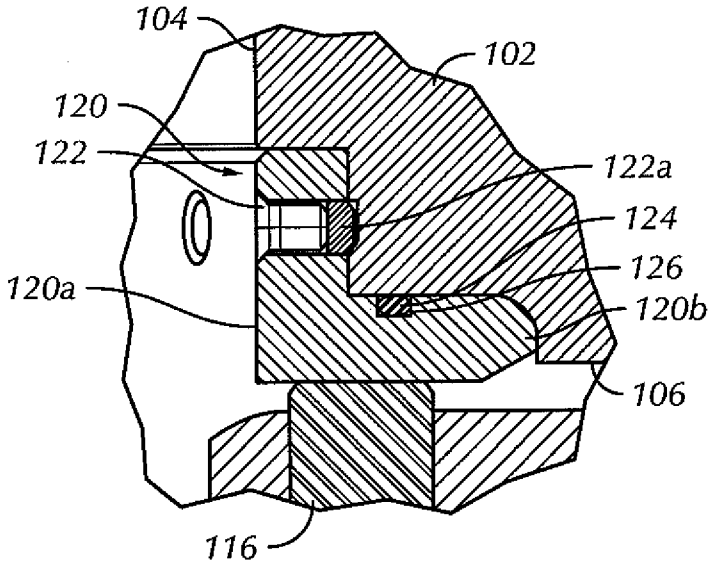

FIG. 3
(Prior Art)

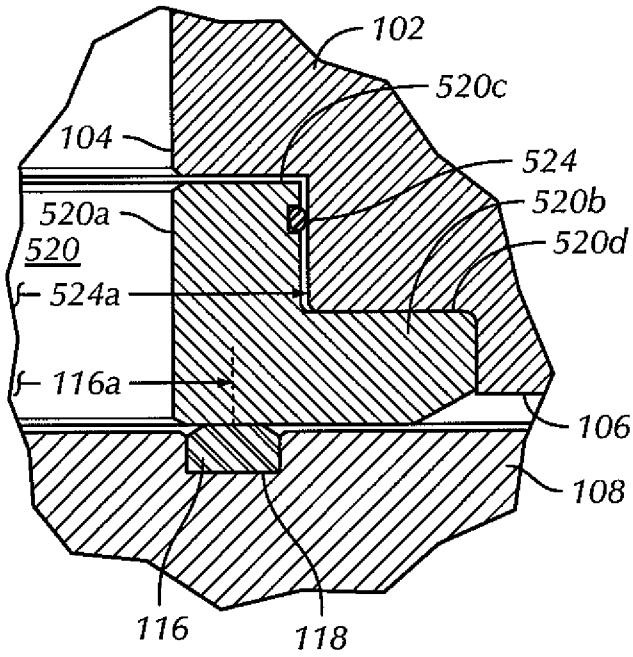

FIG. 4A

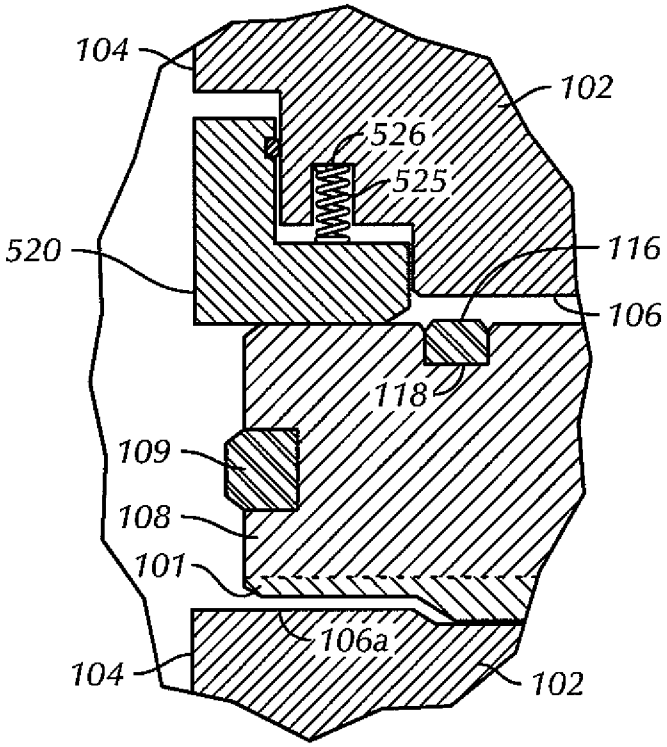
104
102
526
525
520
116
106
118
109
108
101
106a
104
102

FIG. 4B

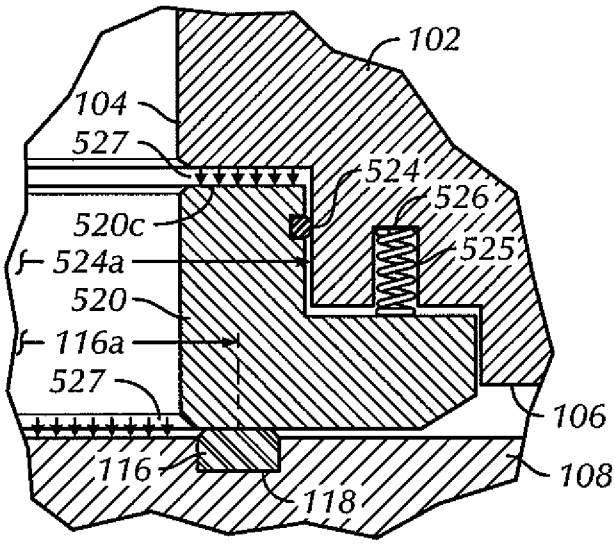
102
104
527
524
526
520c
525
524a
520
116a
527
106
116
118
108

FIG. 4C

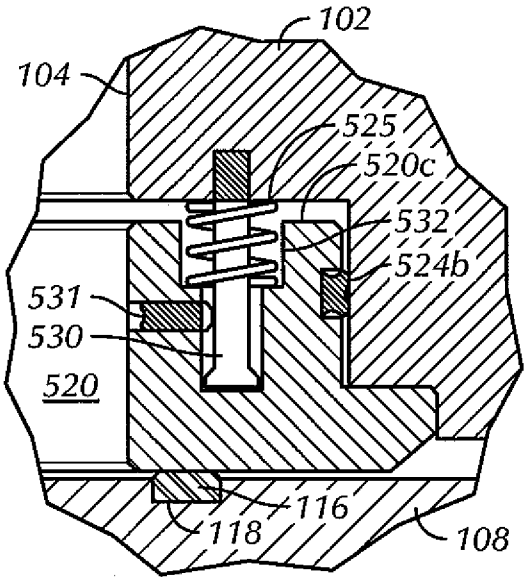
102
104
525
520c
532
524b
531
530
520
116
118
108

FIG. 4D

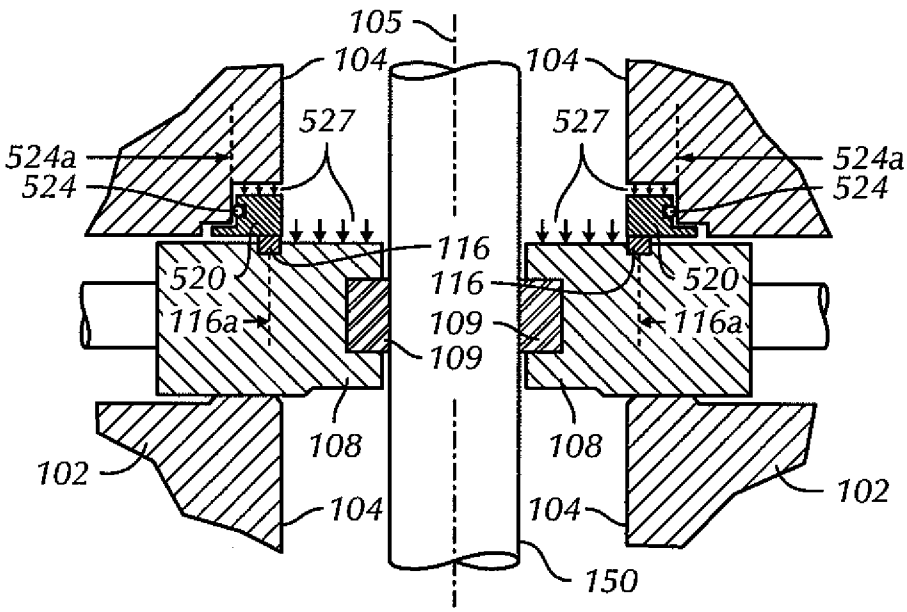
105
104
104
527
527
524a
524
524a
524
116
116
520
520
116a
116a
109
109
108
108
102
102
104
104
150

FIG. 5

INTERNATIONAL SEARCH REPORT

International application No.
PCT/US2007/086938

A. CLASSIFICATION OF SUBJECT MATTER

E21B 7/00(2006.01)i

According to International Patent Classification (IPC) or to both national classification and IPC

B. FIELDS SEARCHED

Minimum documentation searched (classification system followed by classification symbols)

IPC 8 : E21B 7/00

Documentation searched other than minimum documentation to the extent that such documents are included in the fields searched

Korean Utility Models and applications for Utility Models since 1975

Japanese Utility Models and applications for Utility Models since 1975

Electronic data base consulted during the international search (name of data base and, where practicable, search terms used)

eKIPASS(KIPO internal)"seal","ram block", "blowout","preventer"

C. DOCUMENTS CONSIDERED TO BE RELEVANT

Category*	Citation of document, with indication, where appropriate, of the relevant passages	Relevant to claim No.
A	US 6158505 A(RALU ARAUJO) 12 DECEMBER 2000 See Column 2, Line 49-Column 3, Line 47; Figures 1-4.	1-19
A	US 2006/0038147 A1(MIGUEL URRYTIA) 23 FEBRUARY 2006 See Paragraph 29-Paragraph 34; Figures 1-2.	1-19
A	US 2004/0079909 A1(ANTHONY P. FOSTER) 29 APRIL 2004 See Paragraph 26-Paragraph 31; Figures 1-4.	1-19
A	US 5360061 A(LEE M. WOMBLE) 01 NOVEMBER 1994 See Column 3, Lines 7- 66; Figure 1.	1-19

☐ Further documents are listed in the continuation of Box C.

☒ See patent family annex.

* Special categories of cited documents:

"A" document defining the general state of the art which is not considered to be of particular relevance

"E" earlier application or patent but published on or after the international filing date

"L" document which may throw doubts on priority claim(s) or which is cited to establish the publication date of citation or other special reason (as specified)

"O" document referring to an oral disclosure, use, exhibition or other means

"P" document published prior to the international filing date but later than the priority date claimed

"T" later document published after the international filing date or priority date and not in conflict with the application but cited to understand the principle or theory underlying the invention

"X" document of particular relevance; the claimed invention cannot be considered novel or cannot be considered to involve an inventive step when the document is taken alone

"Y" document of particular relevance; the claimed invention cannot be considered to involve an inventive step when the document is combined with one or more other such documents,such combination being obvious to a person skilled in the art

"&" document member of the same patent family

Date of the actual completion of the international search	Date of mailing of the international search report
14 APRIL 2008 (14.04.2008)	**14 APRIL 2008 (14.04.2008)**

Name and mailing address of the ISA/KR

Korean Intellectual Property Office
Government Complex-Daejeon, 139 Seonsa-ro, Seo-gu, Daejeon 302-701, Republic of Korea

Facsimile No. 82-42-472-7140

Authorized officer

RYU, Jei Jun

Telephone No. 82-42-481-8219

INTERNATIONAL SEARCH REPORT

Information on patent family members

International application No.

PCT/US2007/086938

Patent document cited in search report	Publication date	Patent family member(s)	Publication date
US06158505A	12.12.2000	NONE	
US20060038147A1		CA2512292AA	17.02.2006
		GB200516739A0	21.09.2005
		GB2417260A1	22.02.2006
		GB2417260B2	08.08.2007
		BR200503361A	10.04.2007
US20040079909A1	29.04.2004	NONE	
US05360061A	01.11.1994	CA2106920AA	15.04.1994
		DE69303248T2	31.10.1996
		EP00593280A1	20.04.1994
		EP00593280B1	19.06.1996