US 20110235951A1

(19) United States

(12) Patent Application Publication

(10) Pub. No.: US 2011/0235951 A1

(43) Pub. Date: Sep. 29, 2011

Sprehe et al.

(54) RECLOSABLE BAG WITH TEAR OPEN FEATURE

(75) Inventors: **Gregory S. Sprehe**, Carbondale, IL (US); **Donald Wright**, Murphysboro, IL (US); **Christopher Pemberton**, Marion, IL (US)

(73) Assignee: **COM-PAC INTERNATIONAL, INC.**, Carbondale, IL (US)

(21) Appl. No.: **12/356,667**

(22) Filed: **Jan. 21, 2009**

Related U.S. Application Data

(60) Continuation-in-part of application No. 10/788,093, filed on Feb. 26, 2004, which is a division of application No. 09/660,210, filed on Sep. 12, 2000, now Pat. No. 6,726,612, which is a division of application No. 09/257,560, filed on Feb. 25, 1999, now Pat. No. 6,117,060, which is a continuation-in-part of application No. 09/118,575, filed on Jul. 17, 1998, now Pat. No. 6,098,369, Continuation-in-part of application No. 10/831,989, filed on Apr. 26, 2004, which is a continuation-in-part of application No. 09/415,696, filed on Oct. 12, 1999, now abandoned.

Publication Classification

(51) **Int. Cl.**
B65D 65/26 (2006.01)

(52) **U.S. Cl.** **383/210.1**

(57) **ABSTRACT**

A reclosable back-seam bag having a top seal and a bottom seal, and a front wall and a back wall is disclosed. The front wall is joined to the back wall at the top seal and the bottom seal. The reclosable back-seam bag includes a reclosable fastener that includes two ends, a first continuous elongated profile strip having a front wall connecting flange and a second continuous elongated profile strip having a back wall connecting flange. The first continuous elongated profile strip includes a male interlocking profile having at least one male interlocking member, and the second continuous elongated profile strip includes a female interlocking profile having at least one female interlocking member. The male interlocking member is configured so as to cause the male interlocking profile to be separated from the female interlocking profile with a substantially equal opening force when being separated in a direction toward said top seal as when separated in a direction toward said bottom seal. At least one frangible access portion disposed substantially parallel to said reclosable fastener assembly may be provided to expose the releasable fastener assembly and/or the contents of the bag.

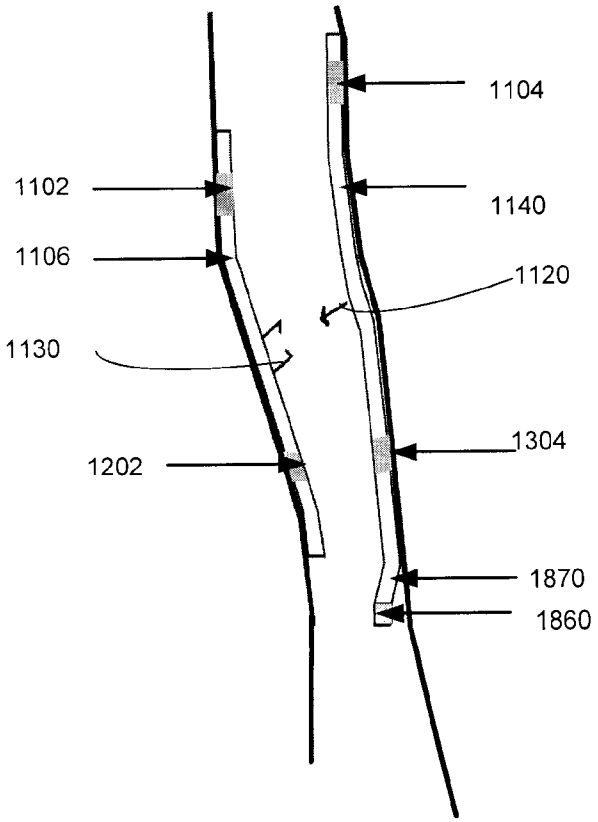

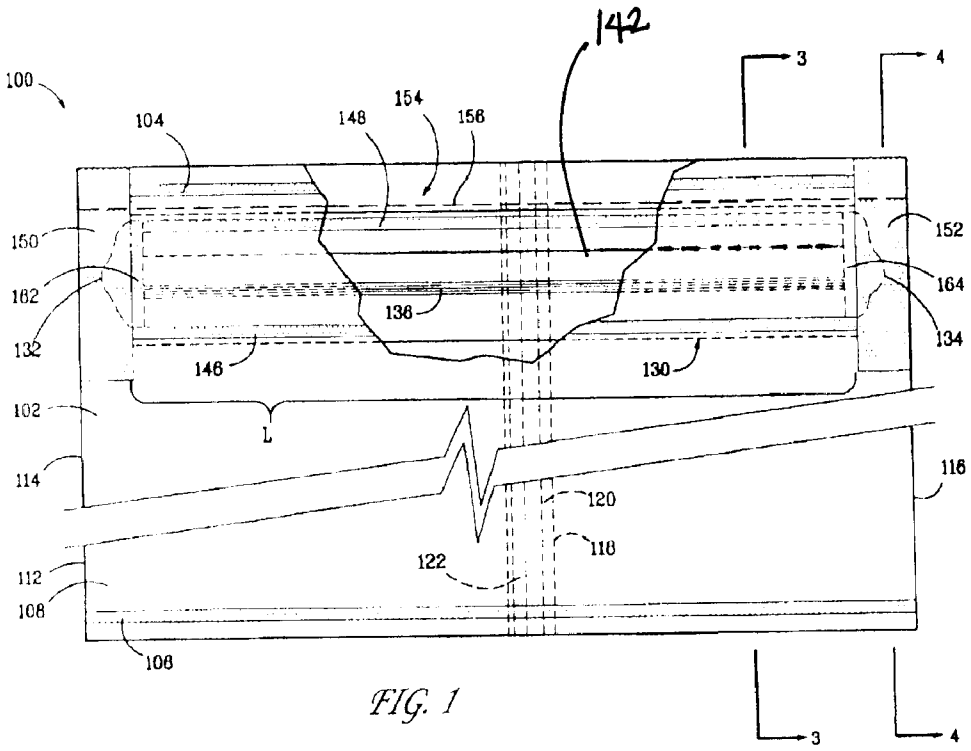
142
3
4
100
104
148
154
156
150
152
162
164
136
132
134
146
130
102
L
114
116
120
118
122
112
108
106
3
4

FIG. 1

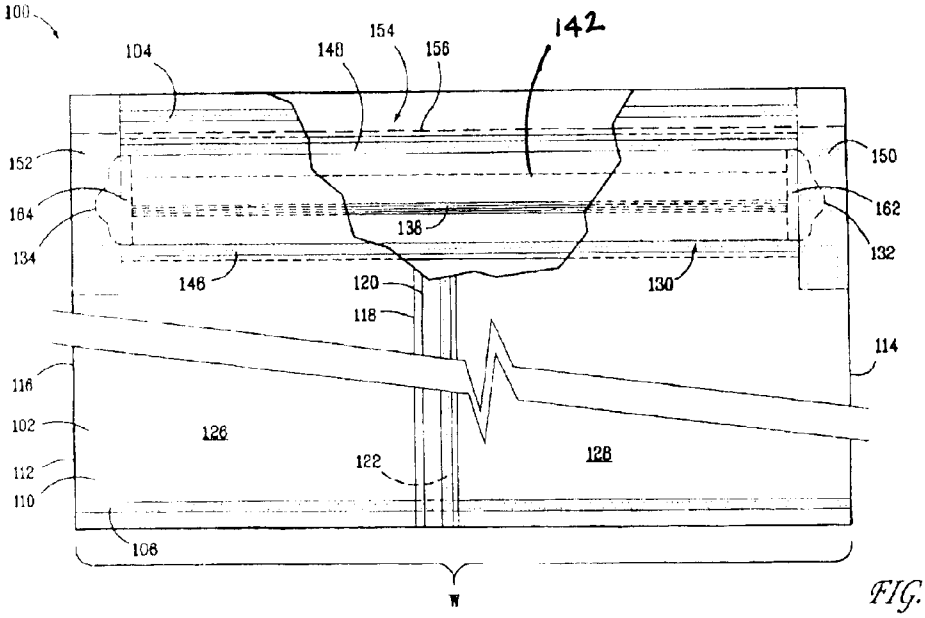
100
104
148
154
156
142
152
150
164
162
134
138
132
146
120
130
118
114
116
102
126
128
112
122
110
108
W

FIG. 2

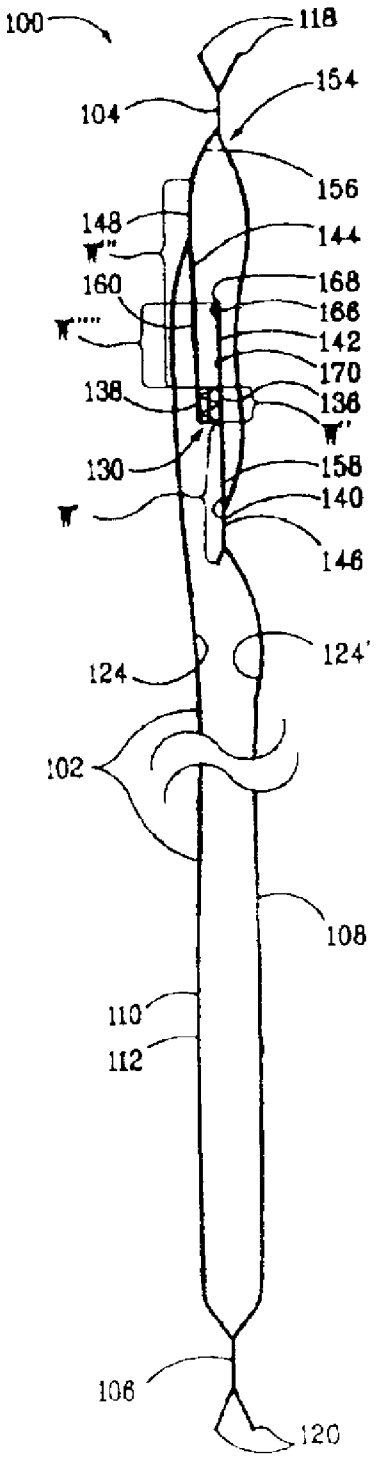
100
118
154
104
156
148
144
160
168
166
142
170
138
136
130
158
140
146
124
124'
102
108
110
112
106
120

FIG. 3

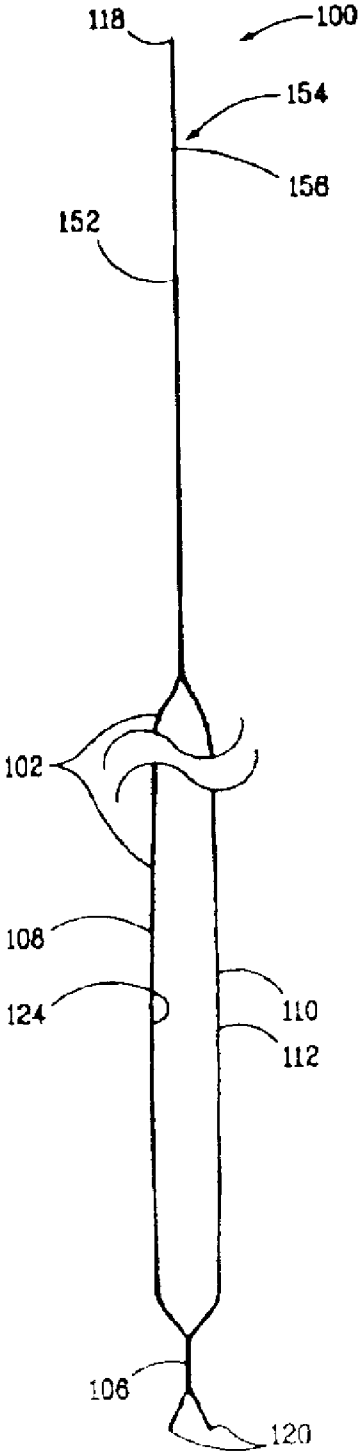
118
100
154
156
152
102
108
124
110
112
106
120

FIG. 4

FIG. 5

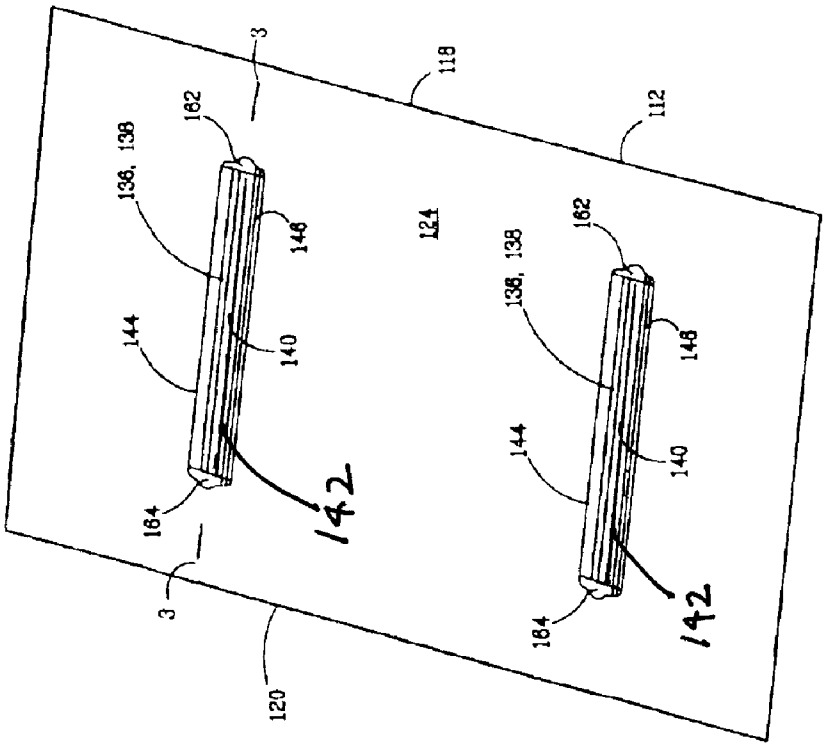
3
118
112
162
136, 138
148
124
144
140
142
184
3
120
162
138, 138
148
144
140
142
184

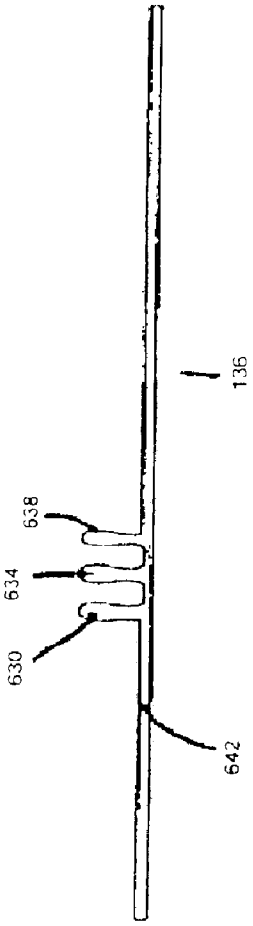

FIG. 6

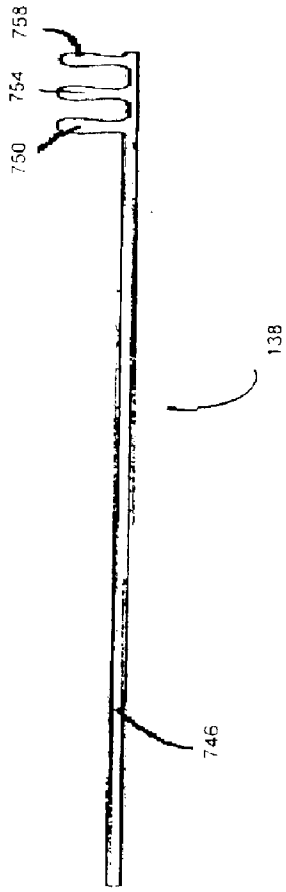

FIG. 7

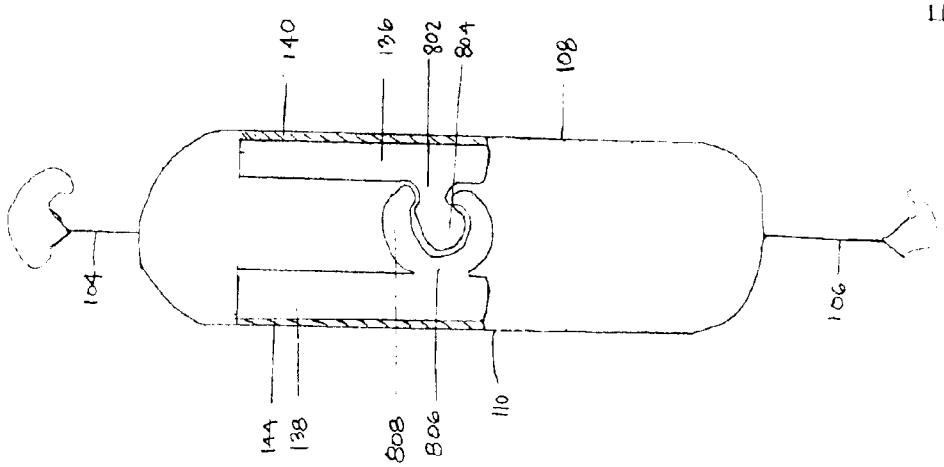

FIG. 8A

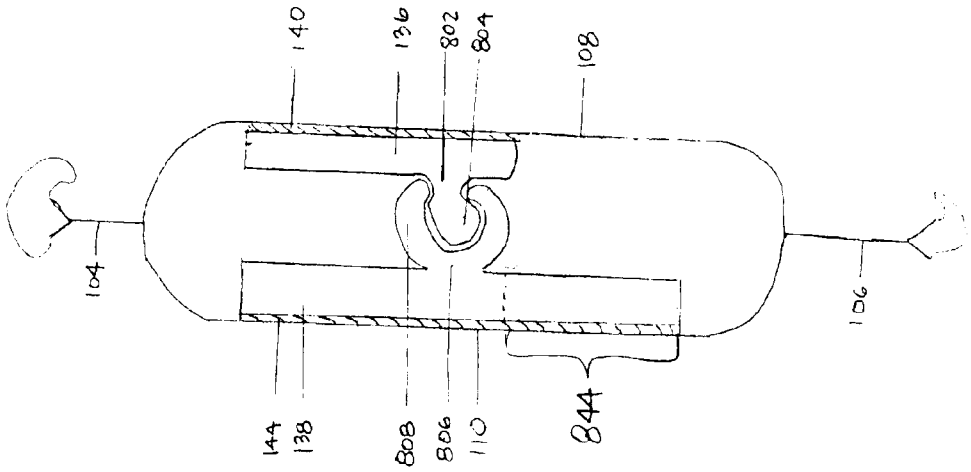

FIG. 8B

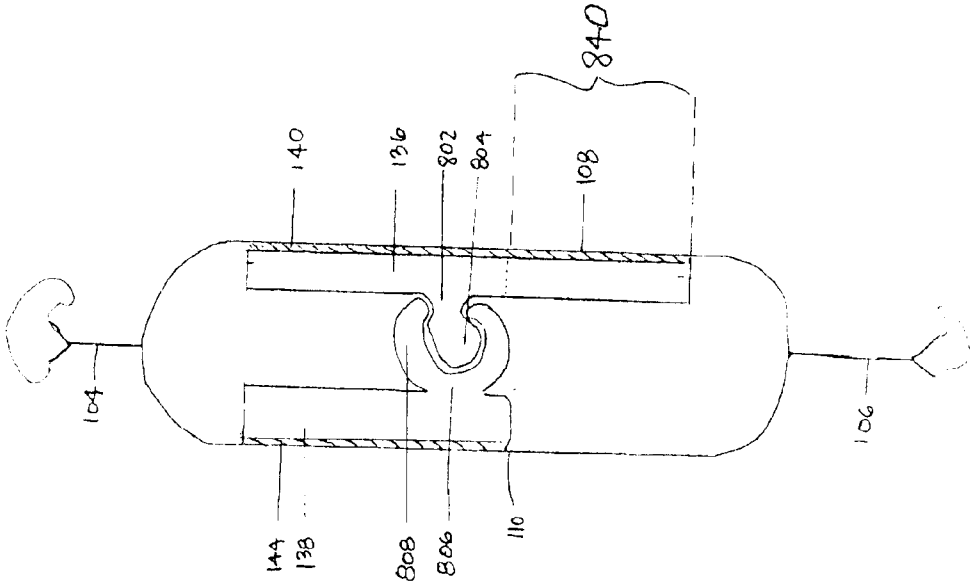

FIG. 8C

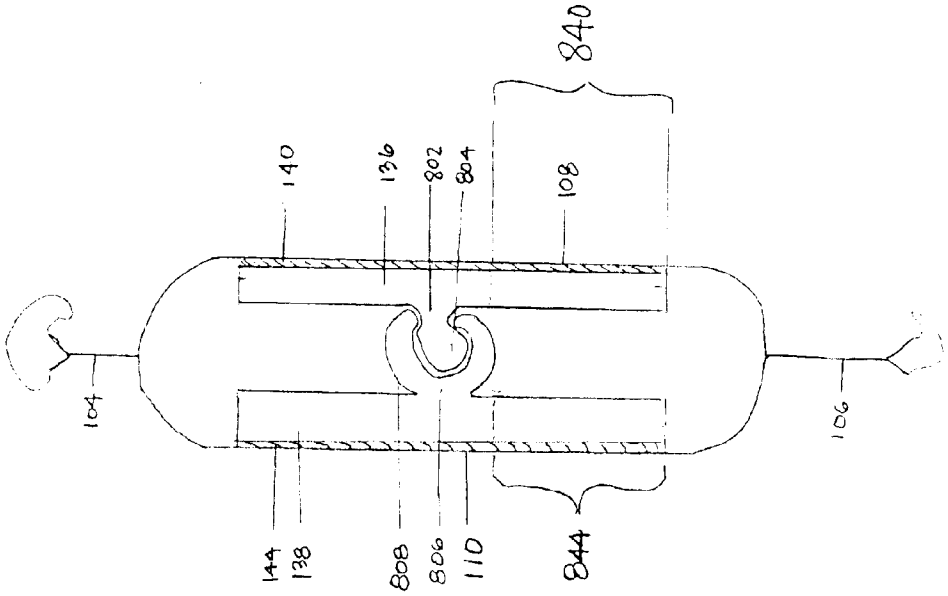

FIG. 8D

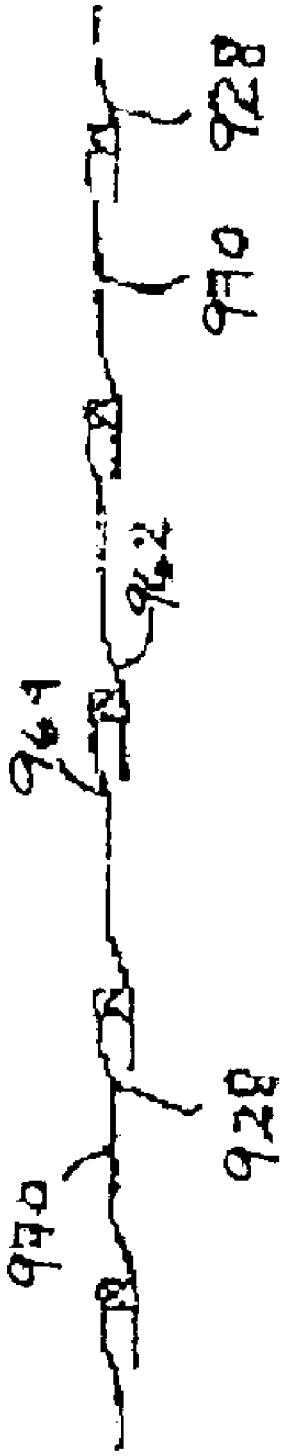

FIG. 9

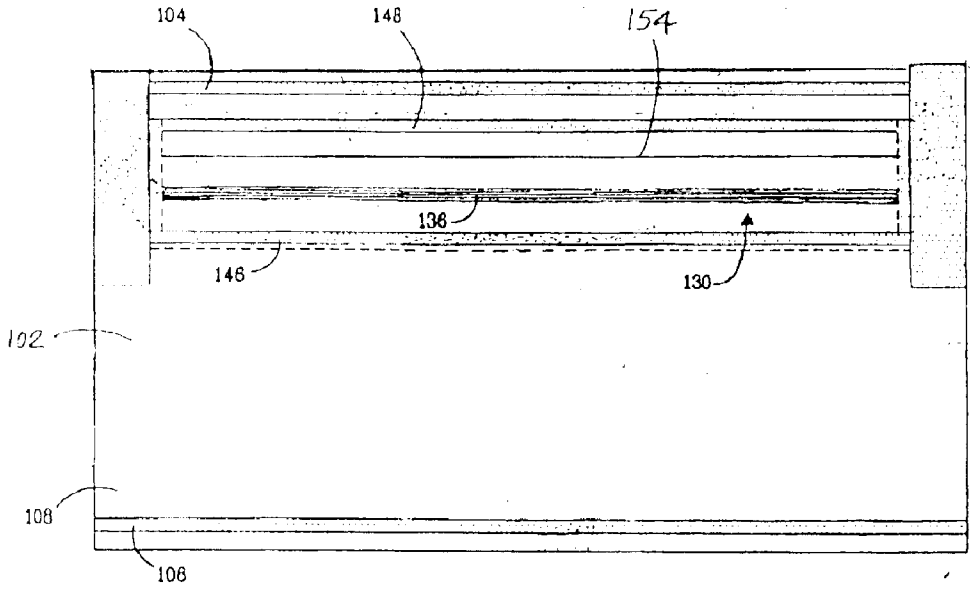

FIG. 10

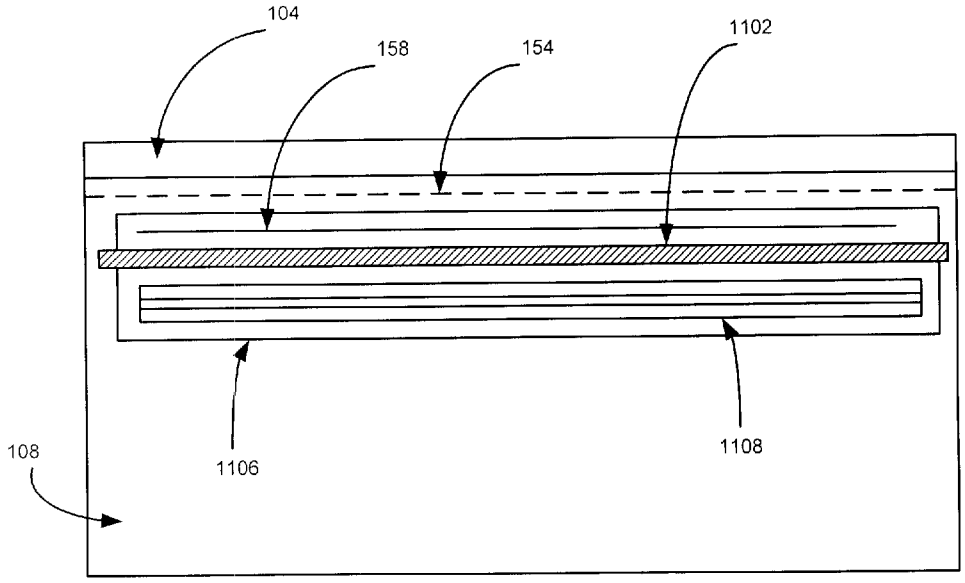

FIG. 11A

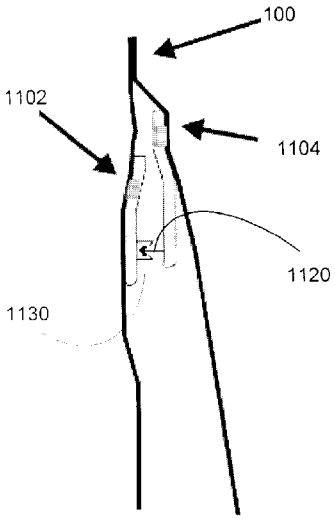

FIG. 11B

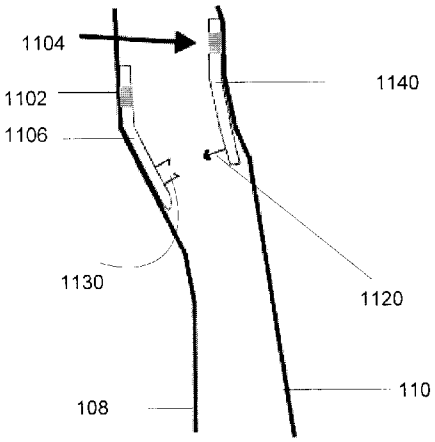

FIG. 11C

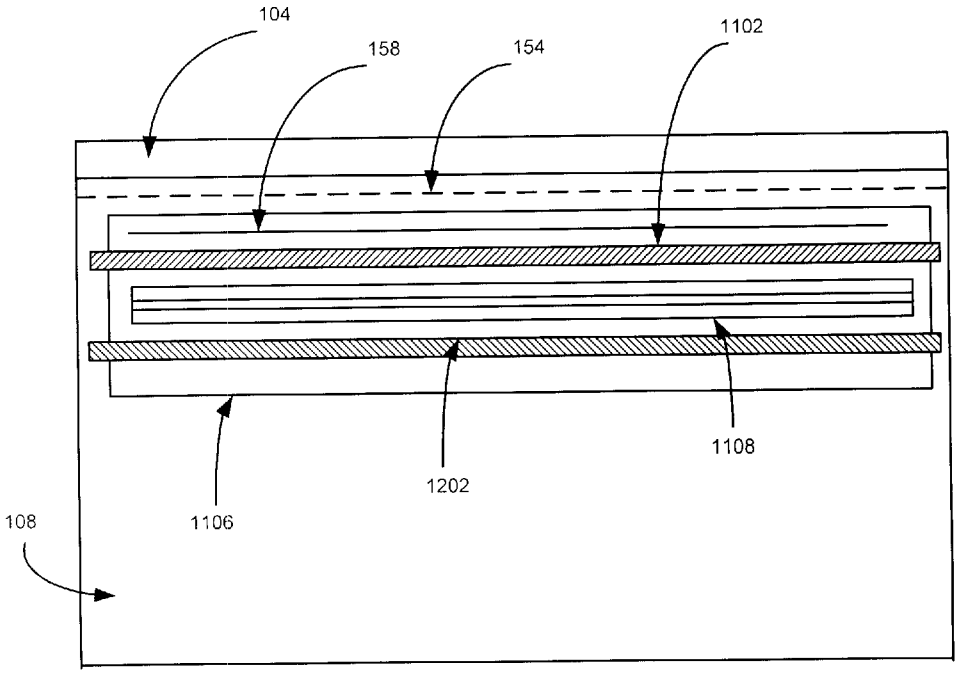

FIG. 12A

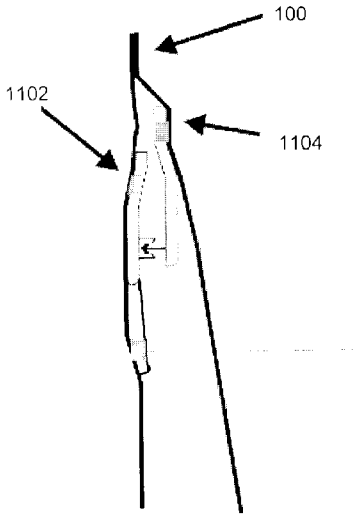

FIG. 12B

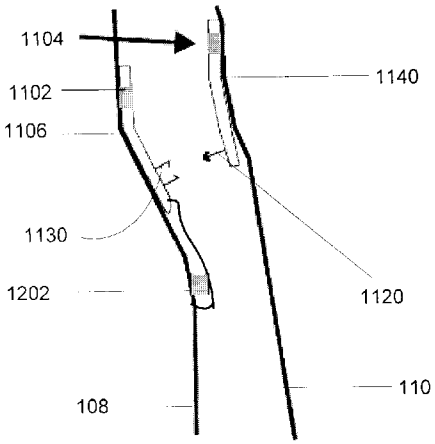

FIG. 12C

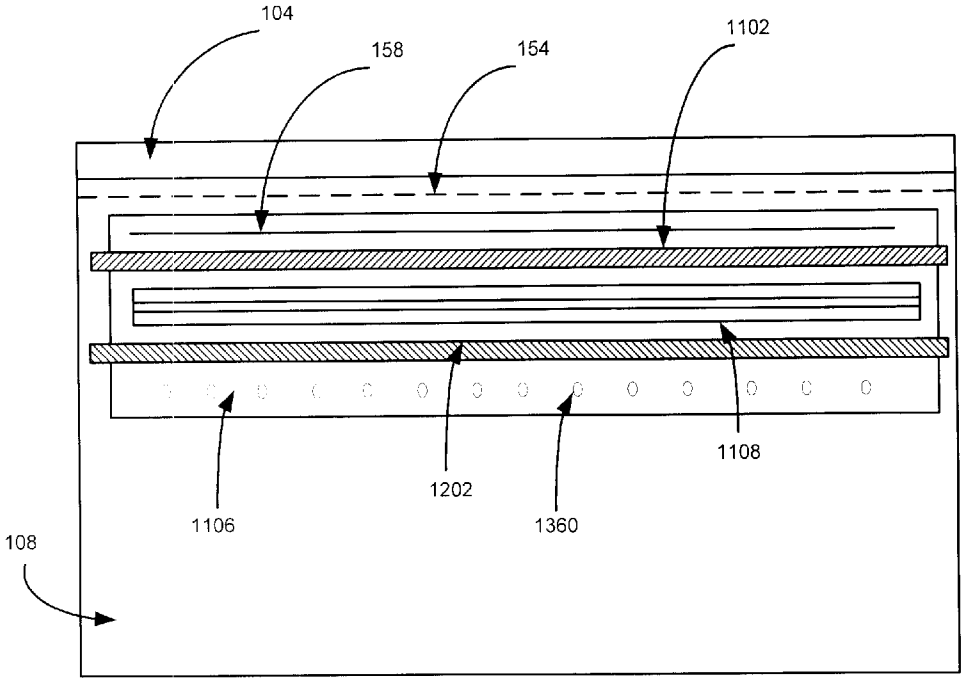

FIG. 13A

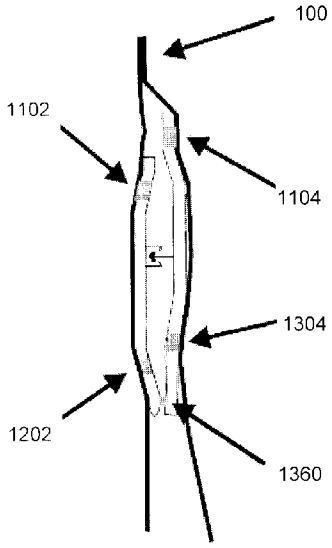

FIG. 13B

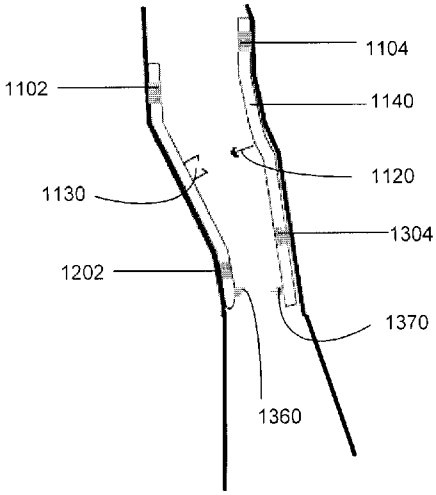

FIG. 13C

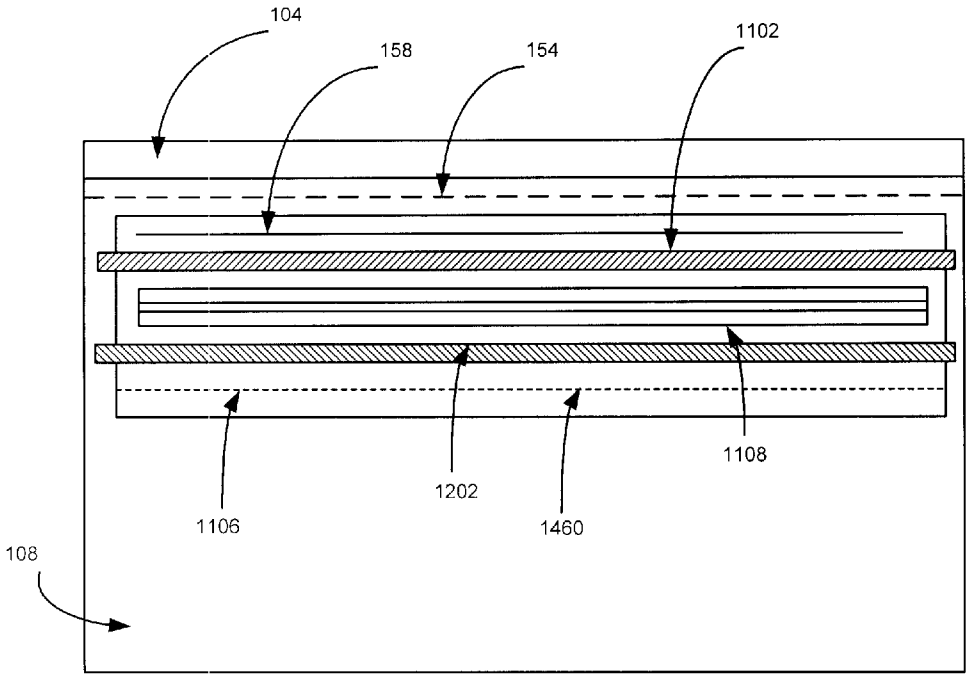

FIG. 14A

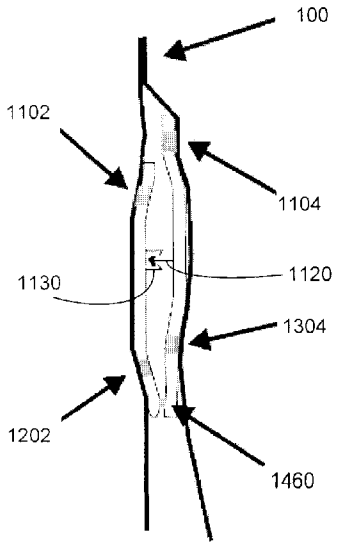

FIG. 14B

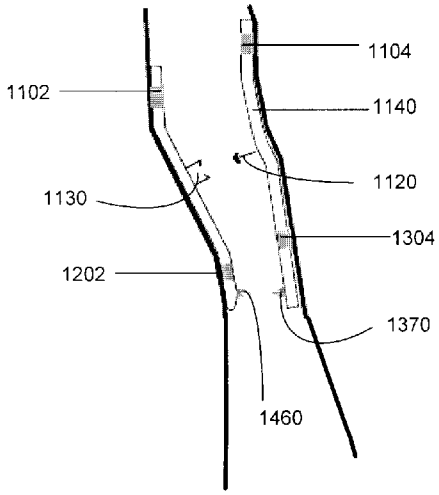

FIG. 14C

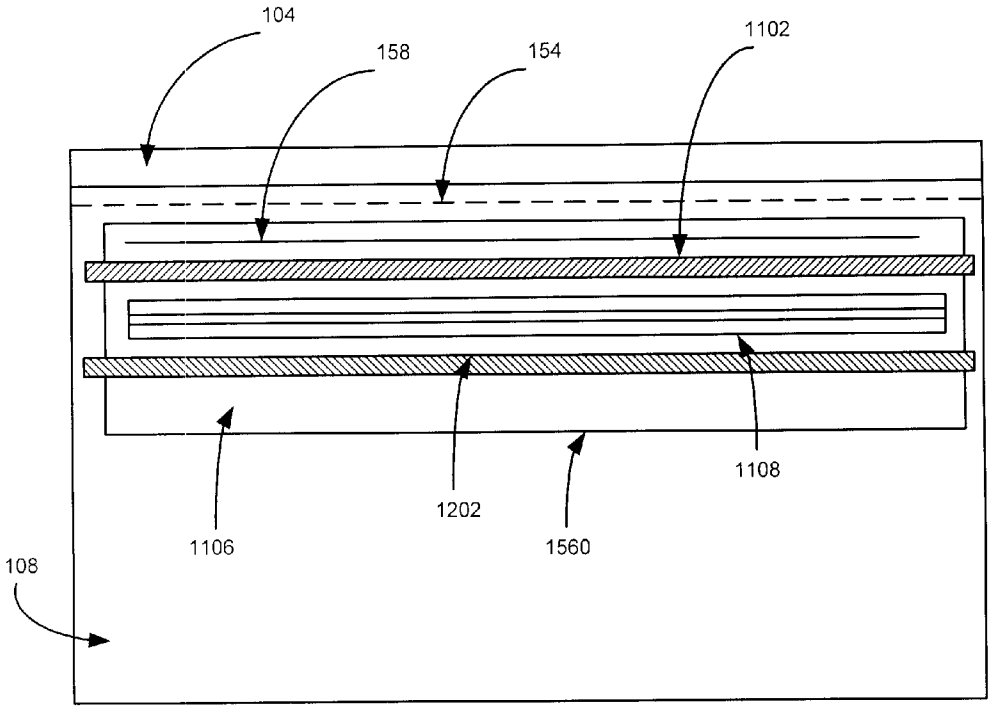

FIG. 15A

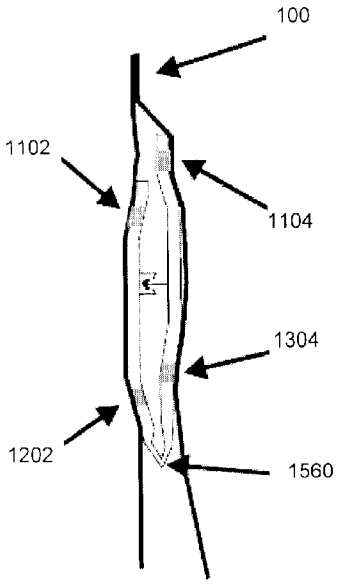

FIG. 15B

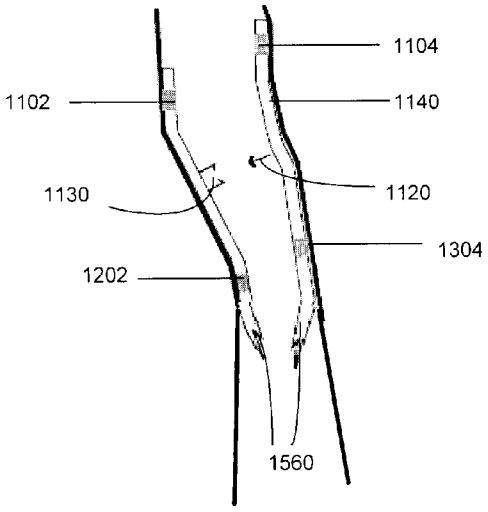

FIG. 15C

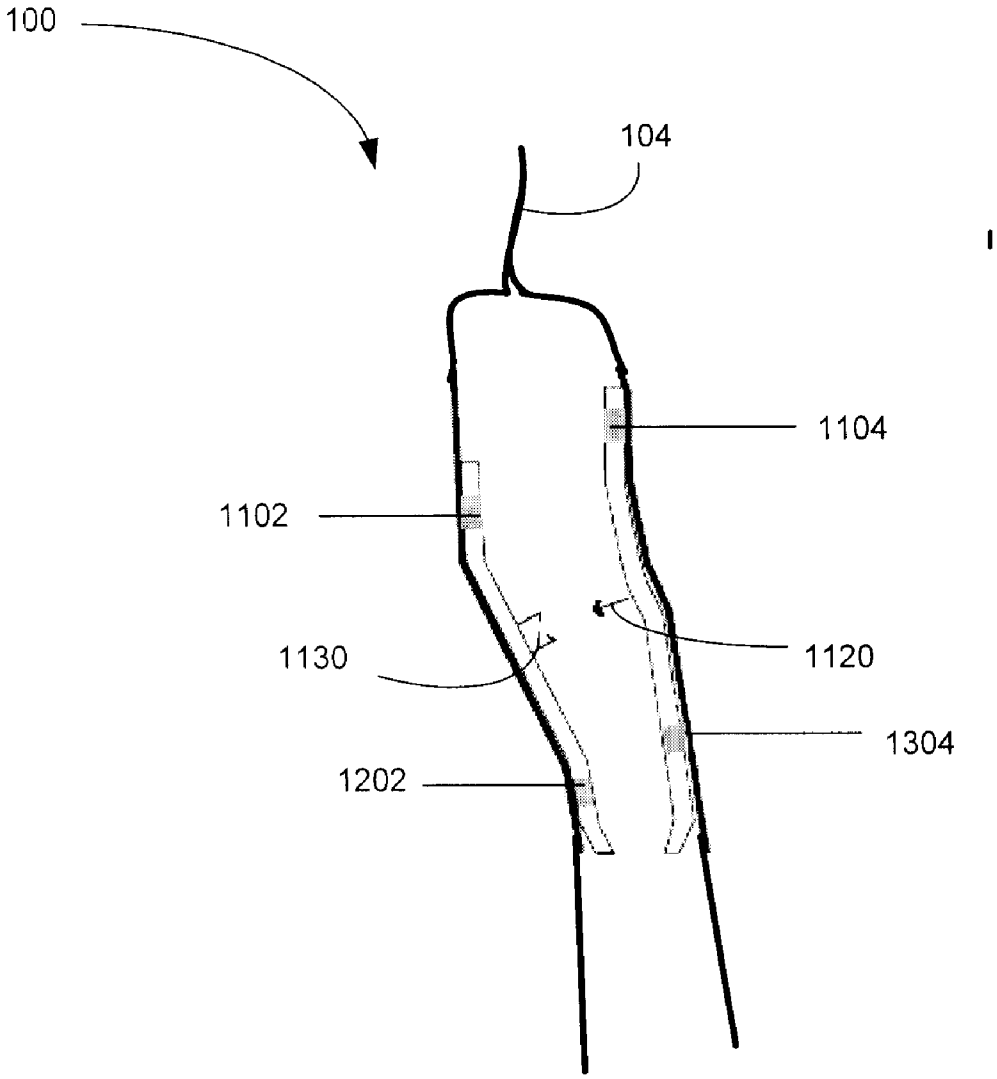

FIG. 16

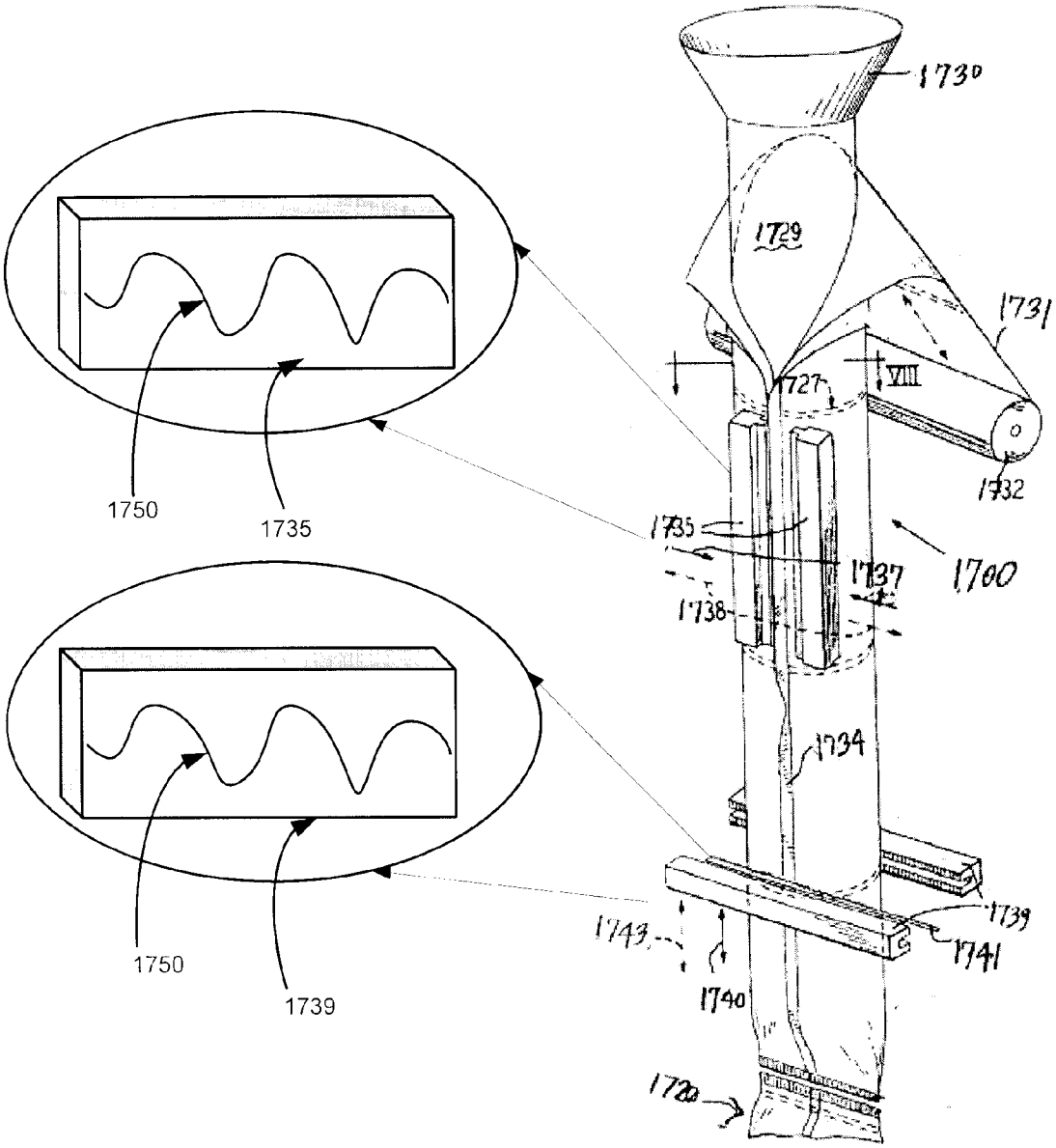
1730
1729
1731
1727
VIII
1732
1750
1735
1735
1737
1700
1738
1734
1750
1739
1743
1739
1741
1740
1720

FIG. 17

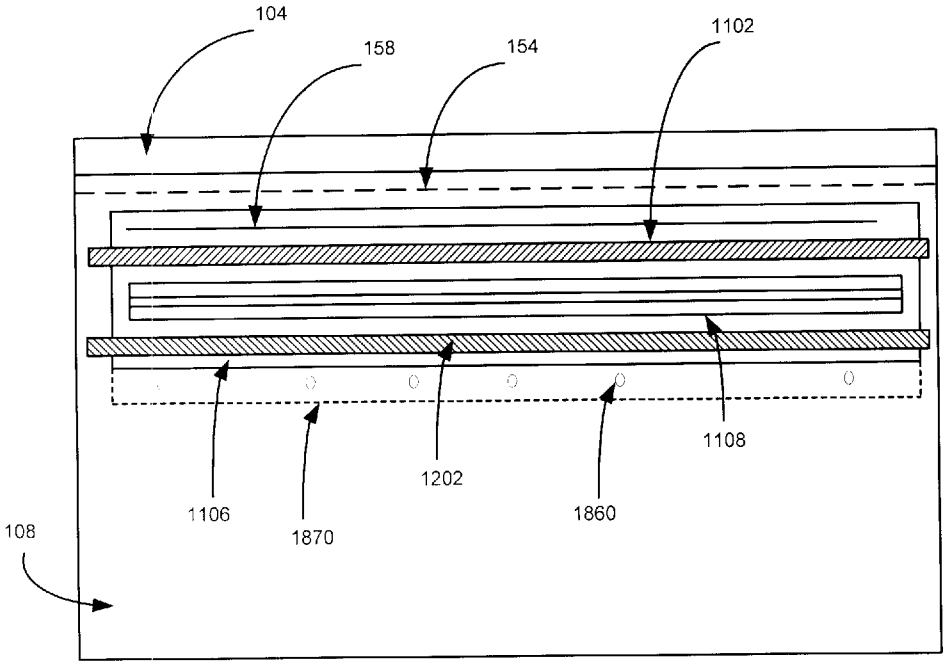

FIG. 18A

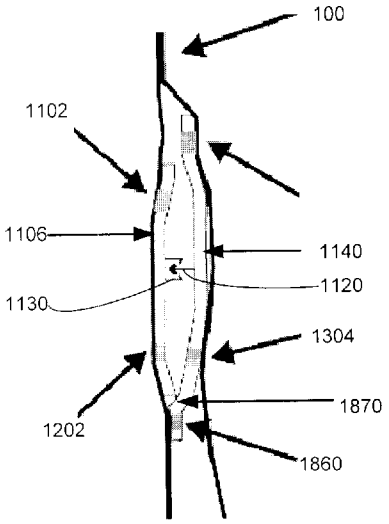

FIG. 18B

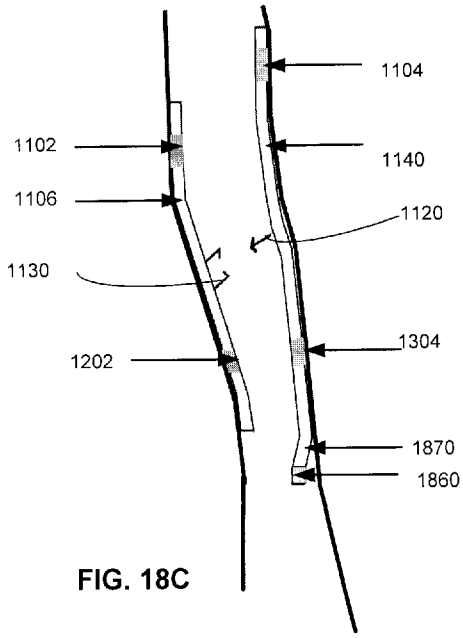

FIG. 18C

RECLOSABLE BAG WITH TEAR OPEN FEATURE

[0001] This application is a continuation-in-part of co-pending application Ser. No. 10/788,093, which was filed on Feb. 26, 2004, which is a division of application Ser. No. 09/660,210, filed on Sep. 12, 2000, now U.S. Pat. No. 6,726,612, which is a division of application Ser. No. 09/257,560, filed on Feb. 25, 1999, now U.S. Pat. No. 6,117,060, which is a continuation-in-part of application Ser. No. 09/118,575, filed on Jul. 17, 1998, now U.S. Pat. No. 6,098,369. This application is also a continuation-in-part of co-pending application Ser. No. 10/831,989, which was filed on Apr. 26, 2004, which is a continuation-in-part of application Ser. No. 09/415,696 filed on Oct. 12, 1999. The content of these applications are herein incorporated by reference in their entirety.

BACKGROUND OF THE INVENTION

[0002] This present invention generally relates to reclosable plastic bags, and a method of their manufacture that is more efficient and economical than conventional methods and devices, and in particular to reclosable bags which can be torn open to access their content.

[0003] Current reclosable bags have been designed in to provide ease of use for users. However, there are shortcomings in the currently available reclosable bags. As an example, consider prior art U.S. Pat. No. 6,030,122 to Ramsey et al ("Ramsey '122 patent"). A particular problem with the Ramsey '122 technique is that a greater amount of force is required to open the reclosable fasteners from outside the bag than the amount of force required to tear open the bag from the middle. Such disproportionate amount of force may damage the reclosable bag or even the contents of the reclosable bag when a user opens the bag.

[0004] Consider further, U.S. Pat. No. 5,461,845 to Yeager ("Yeager '845 patent"). There are at least two definitive shortcomings with the technology described therein. The first shortcoming relates to the problem of having to open the zipper completely from the front panel of the finished bag. Users of reclosable bags and packaging are accustomed to opening the profiled fastener from the "top" of the package, and not from the front panel of the package. Hence, the user will have to become accustomed to an unfamiliar or uncomfortable manner in which to open a bag.

[0005] The second shortcoming is more serious, and relates to the requirement of opening the package from the front panel thereof. If the package is to be opened from the front panel, a cut or perforation must be made before the fastener is applied. This cut, or perforation, is generally shaped like an "oval" with opening "tabs" for gaining access to the fastener. Since the fastener, most likely, is not closed at the ends of the fastener, the possibility of contamination exists.

[0006] The most expedient and economical way to make the package is to create the cut, or perforation, in one operation, just upstream of the fastener strip application. This operation, in its simplest form, will leave openings for potential contamination to pass through the cut or perforated front panel opening. To overcome this contamination potential, users of this method add a great deal more cost and complexity to create a sealed, sealable "patch", or some other means of eliminating this contamination risk. The same problem occurs, if the package must be hermetically sealed.

[0007] Hence, there exists a need to solve the problems in the art that are articulated above.

SUMMARY OF THE INVENTION

[0008] Accordingly, among other advantages, the reclosable bag described herein overcomes the shortcomings of the prior art by providing a reclosable back-seam bag that provides a hermetic seal by sealing a bag body with a top seal, a bottom seal, a back seam seal, and a plurality of seals sealing a reclosable fastener with flanges to a front wall and, in some cases, to a back wall of the bag body. In another embodiment, a reclosable bag can be configured as a side-seam bag having one web of film folded along a longitudinal fold to form two half webs of film, and having top edges of each of the two half webs of film sealed together to form a side seam. In another embodiment, the reclosable bag is configured as having two webs of film that are sealed together along respective edges of the two webs of film to form four side seams, each of the two webs of film having an inside surface, and the back wall having two sides, each side being defined between each of the four side seams and a respective one of the two webs of film.

[0009] The reclosable bag includes a reclosable fastener assembly that includes two ends, a first continuous elongated profile strip and a second continuous elongated profile strip. The first continuous elongated profile strip and the second continuous elongated profile strip provide a seal upon interconnection thereof.

[0010] A seal is provided at each end of the reclosable fastener assembly. The reclosable bag is further provided with a first continuous elongated profile strip that has a front wall connecting flange and a gripping flange. Both the front wall connecting flange and the gripping flange have a width greater than a width of the first continuous elongated profile strip to assist in positioning and sealing of the reclosable fastener to web stock. The front wall-connecting flange is sealed to the front wall of the bag.

[0011] A frangible access that is substantially parallel to the reclosable fastener assembly may be provided through the front wall of the bag by means of one or more score lines. Upon opening, the frangible access exposes the reclosable fastener assembly. The frangible access may be disposed on the front wall or the back wall of the bag body adjacent the reclosable fastener assembly and above the bottom seal.

[0012] In one example, a reclosable back-seam bag includes a gripping flange that includes a continuous rib disposed at a distal end of the gripping flange and/or a plurality of continuous, substantially parallel ribs disposed on the gripping flange. The ribs and the gripping flange provide a user with ease of opening of the reclosable fastener once the frangible access has been opened.

[0013] In another example, a method of making a reclosable back-seam bag. The method includes the steps of providing a rectangular sheet of polymeric material having an inside surface. A predetermined length of a reclosable fastener including two ends, and a first continuous elongated profile strip interlocked with a second continuous elongated profile strip is provided, and a front wall connecting flange of the reclosable fastener is connected to the inside surface of the rectangular sheet.

[0014] The method includes the step of forming a bag body having a front wall and a back wall. The back wall is formed by folding the rectangular sheet of film along two longitudinal folds, and overlapping and sealing edges of the rectangular sheet.

[0015] The method further includes joining the front wall to the back wall at a bottom seal, and connecting a back wall connecting flange to the inside surface of the rectangular sheet and the back wall of the bag at a back wall connecting seal. A frangible access substantially parallel to the reclosable fastener being disposed on the front wall of the bag body adjacent the reclosable fastener and below the back wall connecting seal is provided for exposing the reclosable fastener. The method also includes providing a top seal above the frangible access.

[0016] In another example, a first continuous elongated profile strip having a male interlocking profile includes at least one male interlocking member. Also provided is a second continuous elongated profile strip having a female interlocking profile that includes at least one female interlocking member. The first continuous elongated profile strip can be releasably connected to the second continuous elongated profile strip by engaging the male interlocking member with the female interlocking member. However, in a preferred embodiment, the male interlocking member is provided in an open disengaged position in the bag when the bag is sealed. Thus, the bag may be easily opened by pinching the front and back walls of the bag and separating the walls until the top seal is ruptured or peeled open. The open configuration of the fasteners facilitates such opening. Subsequently, easy access is permitted from either the top of the bag, or from rupturing the frangible access portion located above the bottom seal, and then, separating the fastener profile.

[0017] The features described below, other than those specifically set forth above, will become apparent in the detailed description of the preferred embodiments set forth below and in the drawings.

BRIEF DESCRIPTION OF THE DRAWINGS

[0018] FIG. **1** is an embodiment of a front plan view of a reclosable bag;

[0019] FIG. **2** is an embodiment of a back plan view of the reclosable bag;

[0020] FIG. **3** is an embodiment of a side cross sectional view of the reclosable bag of FIG. **1**;

[0021] FIG. **4** is an embodiment of a side cross sectional view of the reclosable bag through a side seal of the bag;

[0022] FIG. **5** is a perspective view of a rectangular sheet of film having a plurality of reclosable fastener assemblies thereon prior to a form, fill and seal operation;

[0023] FIG. **6** illustrates an embodiment of the reclosable bag having the reclosable fastener assembly include a first continuous elongated profile strip;

[0024] FIG. **7** illustrates an embodiment of the reclosable bag having the reclosable fastener assembly include a second continuous elongated profile strip;

[0025] FIGS. **8**A-**8**D illustrate another embodiment of the reclosable bag in which the reclosable fastener assembly may include two ends, a first continuous elongated profile strip having a front wall connecting flange and a second continuous elongated profile strip having a back wall connecting flange, the flanges respectively extending upward, downward or both on the walls of the bag;

[0026] FIG. **9** illustrates a plurality of reclosable fastener assemblies that each include a male part and a female part;

[0027] FIG. **10** illustrates another embodiment of the reclosable bag having a frangible access portion to access the contents of the reclosable bag;

[0028] FIGS. **11**A-**11**C illustrate different views of an embodiment of a two-flanged reclosable bag;

[0029] FIGS. **12**A-**12**C illustrate different views of an embodiment of a three-flanged reclosable bag;

[0030] FIGS. **13**A-**13**C illustrate different views of an embodiment of a four-flanged reclosable bag having tack-down seals;

[0031] FIGS. **14**A-**14**C illustrate different views of an embodiment of a four-flanged reclosable bag having peelable adhesives or co-extruded beads;

[0032] FIGS. **15**A-**15**C illustrate different views of an embodiment of a four-flanged reclosable bag having a frangible membrane that at least a pair of the four flanges.

[0033] FIG. **16** illustrates another embodiment of a side view of a four-flanged reclosable bag in which the male interlocking member is provided in an open disengaged position when the top seal of the bag remains sealed.

[0034] FIG. **17** illustrates an exemplary machine that can be used to manufacture a reclosable back-seam bag.

[0035] FIGS. **18**A-**18**C illustrate different views of an embodiment of a four-flanged reclosable bag having a flange overlap configured with overlap seals.

DETAILED DESCRIPTION OF THE PREFERRED EMBODIMENTS

[0036] FIG. **1** is a front plan view of reclosable back-seam bag **100**. Reclosable back-seam bag **100** includes a bag body **102**. Bag body **102** (FIGS. **1**-**4**) can include a top seal **104** and a bottom seal **106**, and a front wall **108** and a back wall **110**. Front wall **108** (FIGS. **1**, **3** and **4**) may be joined to the back wall **110** at the top seal **104** and the bottom seal **106** (FIGS. **1**-**4**). It is appreciated that bag body **102** can be formed on conventional form fill and seal machines known in the art. In another embodiment, a reclosable bag can be configured as a side-seam bag having one web of film folded along a longitudinal fold to form two half webs of film, and having top edges of each of the two half webs of film sealed together to form a side seam. In another embodiment, the reclosable bag is configured as having two webs of film that are sealed together along respective edges of the two webs of film to form four side seams, each of the two webs of film having an inside surface, and the back wall having two sides, each side being defined between each of the four side seams and a respective one of the two webs of film.

[0037] Bag **100** includes reclosable fastener assembly **130** (FIGS. **1**-**3**). Reclosable fastener assembly **130** includes two ends **132**, **134**. Between ends **132**, **134**, a first continuous elongated profile strip **136** may be releasably interlocked with a second continuous elongated profile strip **138**. It is appreciated that first continuous elongated profile **136** and the second continuous elongated profile **138** have protruding male and female members (not shown) which when interlocked provide an airtight and watertight seal.

[0038] Any of the seals described herein can be made by a variety of devices including heat sealers, ultrasonic sealers, and other devices known in the art. The seals also may be made with an adhesive.

[0039] A continuous airtight and/or watertight lower seal **146** is disposed along the length L of the reclosable fastener assembly **130** and may be positioned below the profile strips **136**, **138**. It is appreciated that seal **146** is placed such that seal **146** connects the reclosable fastener assembly **130** to the front wall **108** prior to rectangular sheet of film **112** being formed into a tubular structure precursor of bag body **102**. That is,

seal **146** may connect reclosable fastener assembly **130** to rectangular sheet of film **112** while the sheet of film is still in a substantially flat state (FIG. **5**).

[0040] A continuous airtight and/or watertight upper seal **148** along the length L of the reclosable fastener assembly is positioned above the profile strips **136**, **138**. The upper seal **148** connects the reclosable fastener to back wall **110**. Upper seal **148** may be made after the bag body **102** is substantially complete, e.g. after the bag body **102** has been substantially completed on a form fill and seal machine. This may be accomplished by sealing jaws on the form fill and seal machine.

[0041] In an embodiment, reclosable back-seam bag **100** may include a first continuous elongated profile strip **136** that has a front wall connecting flange **140** and a gripping flange **142** (FIG. **3**). Both the front wall connecting flange **140** and the gripping flange **142** may have widths W', W'''' greater than a width W" of the first continuous elongated profile strip **136**. It is appreciated that by providing flanges **140**, **144**, the problems associated with sealing an irregularly shaped surface, e.g. a zipper profile, to a smooth surface are eliminated. The flange **140** and flange **144** provide a substantially smooth, planar and uniform surface to which to seal the inside surface **124** of rectangular sheet of film **112** thereto.

[0042] By way of example, front wall connecting flange **140** can be sealed to front wall **108** at inside surface **124'**. Similarly, second continuous elongated profile strip **138** has a back wall-connecting flange **144**. The back wall connecting flange **144** has a width W'" greater than a width W" of the second continuous elongated profile strip **138**, and in a variant a width greater than gripping flange **142**. Back wall connecting flange **140** is sealed to back wall **110** at back wall connecting seal **148**.

[0043] To improve the appearance and air and watertightness of bag **100**, the length L of the reclosable fastener assembly **130** is preferably configured to be less than the width W of back wall **110** (FIG. **2**).

[0044] In another embodiment, reclosable back seam bag **100** includes a frangible access **154** (FIGS. **1-4**). Access **154** can take many forms including a score line or a plurality of perforations. Access **154** can be substantially parallel to the reclosable fastener assembly **130**. Removal of access **154** exposes the releasable fastener assembly **130** and provides access to the gripping flange **142**, and profile strips **136**, **138**. In an embodiment, the frangible access **154** may be disposed both on the front wall **108** and on the back wall **110** of the bag body **102** adjacent the reclosable fastener assembly **130** and above the upper seal **148** (FIGS. **1** and **2**). In an embodiment, frangible access **154** may include a plurality of perforations **156** (FIGS. **1**, **3** and **4**).

[0045] Back wall **110** of bag body **102** may be formed from rectangular sheet of film **112** (FIG. **5**) on a conventional form, fill and seal machine. The form fill and seal machine can be a vertical form, fill and seal machine. Film **112** can be made from any suitable material but is preferably made from a polymeric material. Film **112** can be folded along two longitudinal folds **114**, **116**, as the film passes through the form fill and seal machine. The vertical edges **118**, **120** (FIG. **1**) are overlapped and sealed as is conventional to form back seam **122**. Back wall **110** has two sides **126**, **128** (FIG. **2**). Each side **126**, **128** is defined between back seam **122** and a respective one of the longitudinal folds **114**, **116**.

[0046] In one embodiment, the back wall **110** can be formed from one web of film folded along a longitudinal fold to form two half webs of film. The top edges of each of the two half webs of film can then be sealed together to form a side seam. In this embodiment, the back wall **110** has two sides, each side being defined between the side seam and a respective one of the longitudinal folds. Further, in this embodiment, the front wall connecting flange **146** may be connected to the inside surface of one web of film and the front wall **108** of the bag body **102** at a front wall seal **146**. In this embodiment, the front wall seal **146** may be substantially parallel to the top seal **104** and spaced between the bottom seal **106** and the profile strips **136**, **138**. Also the back wall connecting flange **144** can be connected to the inside surface of the one web of film and the back wall at a back wall connecting seal such that the back wall connecting seal is spaced between the profile strips and the top seal **104**. In this embodiment, a side seal can be disposed at each end of the reclosable fastener such that the side seal connects an end of the reclosable fastener to the inside surface of the one web of film inwardly of the longitudinal folds of the bag body to thereby prevent air or liquids from entering or leaving the bag through the ends of the reclosable fastener.

[0047] In another embodiment, the back wall **110** can be formed from two webs of film that are sealed together along respective edges of the two webs of film to form four side seams. Each of the two webs of film has an inside surface. The back wall **110** has two sides, each side being defined between each of the four side seams and a respective one of the two webs of film. In this embodiment, the front wall connecting flange **146** may be being connected to said inside surface of each of the two webs of film and the front wall **108** of the bag body **102** at a front wall seal **146**. In this embodiment, the front wall seal **146** may be substantially parallel to the top seal **104** and spaced between the bottom seal **106** and the profile strips **136**, **138**. Also the back wall connecting flange **144** can be connected to the inside surface of each of the two webs of film and the back wall at a back wall connecting seal, such that the back wall connecting seal is spaced between the profile strips and the top seal **104**. In this embodiment, a side seal can be disposed at each end of the reclosable fastener such that the side seal connects an end of the reclosable fastener to the inside surface of each of the two webs of film inwardly of the bag body thereby preventing air or liquids from entering or leaving the bag through the ends of the reclosable fastener.

[0048] Reclosable fastener **130** includes two ends **132**, **134**, a first continuous elongated profile strip **136** and a second continuous elongated profile strip **138**. The first continuous elongated profile strip **136** may be releasably connected to the second continuous elongated profile strip **138**. Strip **136** is matable to strip **138**, and either strip **136** or strip **138** can be complementary male and female strips as required. More of the features of strips **136** and **138** are described later below.

[0049] In an embodiment, first continuous elongated profile strip **136** can be configured with a front wall connecting flange **140** and a gripping flange **142**. Front wall connecting flange **140** may be heat sealed or ultrasonically sealed to rectangular sheet of film **112** while film **112** can be in a substantially flat state (FIG. **5**). The sealing of front wall connecting flange **146** to film **112** occurs prior to the formation of a tube (not shown) from film **112** on a conventional form fill and seal machine. It is further appreciated that strips **136**, **138** are interlocked at the time flange **146** is sealed to film **112** (FIG. **5**). In particular, front wall connecting flange **146** is connected to the inside surface **124** of the rectangular sheet of film **112** and the front wall **108** of the bag body **102** at a front

wall seal **146**. Front wall seal **146** may be substantially parallel to top seal **104** and spaced between the bottom seal **106** and the profile strips **136**, **138**.

[0050] Both front wall connecting flange **140** and gripping flange **142** have widths W"", W"" greater than a width W" of the first continuous elongated profile strip **136**. Second continuous elongated profile strip **138** may include a back wall-connecting flange **144**. In an embodiment, width W' of gripping flange **142** is about 0.8 centimeters, and width W" of strip **136** is about 0.3 centimeters. Back wall connecting flange **144** has a width W'" greater than a width W" of second continuous elongated profile strip **138**. Width W'" of flange **144** is about 1.7 centimeters in a embodiment, and W" is about 0.3 centimeters. Gripping flange **142** may allow for a user to easily open the interlocked strips **136**, **138**, by grasping flange **142** and back wall connecting flange **144** and separating the flanges **142**, **144**. Width W"" of the gripping flange **142** may be substantially less than width W'" of the back wall connecting flange **144**. It is appreciated that the use of these widths facilitates the placement of back wall connecting seal **148** such that the gripping flange **142** does not interfere with the sealing process.

[0051] To aid in the formation of the airtight and/or watertight seals used in the present invention, it is appreciated that the length L of the reclosable fastener **130** is less than the combined lengths of the two sides **126**, **128** that form the back panel of bag body **102**. In an embodiment, length L is about 21.5 centimeters.

[0052] Back wall connecting flange **144** can be connected to the inside surface **124** of the rectangular sheet of film **112** and the back wall **110** at a back wall connecting seal **148**. Back wall connecting seal **148** may be spaced between profile strips **136**, **138**, and the top seal **104**. In an embodiment of bag **100**, bag **100** has the various seals placed as follows: Top seal **104** is disposed approximately 3 millimeters from the top of bag **100**; Frangible access **154** is disposed about 4 millimeters below top seal **104**; Back wall connecting seal **148** is disposed about 5 millimeters below frangible access **154**; Profiles **136**, **138** are disposed about 1.3 centimeters below back wall connecting seal **148**; Front wall connecting flange **140** is disposed about 7 millimeters below profiles **136**, **138**; and, Bottom seal **106** is disposed about 30 centimeters below front wall connecting flange **140**.

[0053] Side seals **150**, **152** are placed at each end of the reclosable fastener assembly **130**. Side seals **150**, **152** provide an airtight and/or watertight seal between the inside surface **124** of film **112** and reclosable fastener assembly **130**. Prior to the sealing of front wall connecting flange **140** to front wall **108**, the ends **132**, **134** of reclosable fastener **130** can be splotched. Splotching of reclosable fastener ends **132**, **134** creates substantially flattened ends **162**, **164** which facilitate the formation of the airtight and/or watertight seals of the invention.

[0054] A frangible access **154** can be cut between back wall connecting seal **148** and top seal **104** with a standard perforating die, and the like, access **154** is substantially parallel to the reclosable fastener **130** and exposes reclosable fastener **130** to a user. Frangible access **154** may be disposed on the front wall **108** and on the back wall **110** of the bag body **102** adjacent reclosable fastener **130** and above back wall connecting seal **148**. It is appreciated that upon opening of frangible access **154**, both front wall **108** and back wall **110** of bag **100** are severed. In an embodiment, frangible access **154** may comprise a plurality of perforations **156**.

[0055] In an embodiment, first continuous elongated profile strip **136** and the second continuous elongated profile strip **138** each have respective back portions **158**, **160** thereof (FIG. **3**). By providing the seals **146**, **148** as illustrated in the figures, first continuous elongated profile strip back portion **158** can move in relation to the inside surface **124'** of the rectangular sheet of film **112**. It is further appreciated that the seal placement permits second continuous elongated profile strip back portion **160** to move in relation to the inside surface **124** of the rectangular sheet of film **112**.

[0056] Gripping flange **142** may include a continuous rib **166** disposed at a distal end **168** of the gripping flange **142**. Gripping flange **142** can also include a plurality of continuous, substantially parallel ribs **170** disposed on the gripping flange **142**.

[0057] Reclosable fastener assembly **130** can be manufactured in different forms. As an example, gripping flange **142** and front wall connecting flange **140** can be made from a single, extruded, flexible polymeric material. That is, gripping flange **142** and connecting flange **140** and profile strip **136** are extruded and form a continuous member. Similarly, second continuous profile strip **138** and the back wall-connecting flange **144** may be formed from an extruded, flexible polymeric material, and can be extruded such that they form a single continuous member. Back wall connecting flange **144** and front wall connecting flange **140** can be of a sufficient thickness to seal to the respective walls that they connect to, yet of a sufficient thickness not to seal to the inside surface **124** of walls **108**, **110** that they are not to seal to when a predetermined amount of heat, pressure and dwell time are applied. A sufficient thickness is empirically determined depending on the type of film **112** used and the type of polymeric material used for profile strips **136**,**138**, and flanges **140**, **144**.

[0058] In an embodiment, gripping flange **142** and the bag wall-connecting flange are made from a single web. First continuous profile strip **136** may be sealed to the web with an airtight and/or watertight seal (not shown). Similarly, strip **138** can be sealed to a second web.

[0059] A method of making a reclosable back-seam bag **100** is also provided herein. A rectangular sheet of polymeric material **112** having an inside surface **124** is provided in a substantially flat state (FIG. **5**). A predetermined length L of a reclosable fastener **130** including two ends **132**, **134**, a first continuous elongated profile strip **136** and a second continuous elongated profile strip **138** is cut from a longer length (e.g., a continuous roll of interlocked fastener assemblies). First continuous elongated profile strip **136** is releasably connected to second continuous elongated profile strip **138**. For each length L of fastener **130**, ends **132** and **134** are splotched so that they are substantially flattened.

[0060] The reclosable fastener **130** may be moved onto film **112** transverse to the length of the film **112** in one embodiment, or longitudinally across the length of the film **112** in another embodiment. Front wall connecting flange **140** is sealed with an airtight and/or watertight seal to the inside surface **124'** of the rectangular sheet of film **112** such that it is approximately centered thereon in relation to the width of the sheet of film **112**. Bag body **102** can be formed on a conventional form, fill, and seal machine. Bag body **102** can be formed into a tube (not shown) such that a front wall **108** and a back wall **110** are formed. Back wall **110** is formed by folding the rectangular sheet of film **112** along two longitudinal folds **114**, **116**, and overlapping and sealing edges **118**,

120 of the rectangular sheet of film **112**. Back wall **110** has two sides **126**, **128**. Each side **126**, **128** is defined between back seam **122** and a respective one of the longitudinal folds **114**, **116**. After the film is formed into a tube (not shown), front wall **108** is joined to the back wall **110** at a bottom seal **106**. Bottom seal **106** can be made in conventional heat sealing jaws (not shown).

[0061] Back wall connecting flange **144** may be connected (e.g. by heat sealing) to the inside surface **124** of rectangular sheet **112** at what is now the back wall **110** of bag body **102** at back wall connecting seal **148**.

[0062] The frangible access **154** can be configured substantially parallel to the reclosable fastener **130** for exposing releasable fastener **130**. Access **154** is formed with a conventional perforating die, and is disposed on front wall **108** and on back wall **110** of the bag body **102** adjacent the reclosable fastener assembly **130** and above the back wall connecting seal **148**.

[0063] The method then includes providing top seal **104** above the frangible access **154**. Properly feeding, locating and sealing reclosable fastener **130** at predetermined locations on rectangular sheet of film **112** readily are important aspects of the method (FIG. **5**). Rectangular sheet of film **112** may have marks **3** or other machine readable indicia thereon to permit an electric eye or other sensor to read the marks or indicia so that proper registration and alignment of the reclosable fastener **130** is obtained with the bag body. Machines commercially available from Z-Patch, Inc. of Carbondale, Ill. are reliable and capable of repeatedly performing the steps referred to in the method described above with high throughput and with low cycle times. The film as shown in FIG. **5** made by the Z-Patch machine is then fed into a form fill seal machine (not shown), having sealing heads adapted to make seals **104**, **106**, **150**, **152**, **122**, and other seals referred to herein. The manner in which reclosable fastener **130** is fed and positioned for sealing onto rectangular sheet of film **112** is critical in order to achieve repeatability.

[0064] Reclosable fastener **130**, which is generally about 3.5 centimeters wide, in one variant of the invention, is delivered in a cross web, stretched position, assuring squareness for positioning onto rectangular sheet of film **112**. It is appreciated that the width and length of fastener **130** can be such that it accommodates the size of the bag body. The front wall seal **146** may be transverse to film **112**.

[0065] FIG. **6** illustrates an embodiment of the reclosable bag having the reclosable fastener assembly **130** include the first continuous elongated profile strip **136**. In this embodiment, the first continuous elongated profile strip **136** may be flat. The first continuous elongated profile strip **136** may also be manufactured from polyethylene. In this embodiment, as illustrated in FIG. **6**, the first continuous elongated profile strip **136** may include a first rib **630**, second rib **634** and third rib **638**. The first rib **630**, second rib **634** and third rib **638** can be in a location offset from the center of the first continuous elongated profile strip **136**, thereby defining a profile adherence surface **642** between ribs **630**, **634**, **638** and the front wall **108** to which the first continuous elongated profile strip **136** attaches. The first rib **630**, second rib **634** and third rib **638** of the first continuous elongated profile strip **136** extend the length, L, of the front wall **108**.

[0066] FIG. **7** illustrates an embodiment of the reclosable bag having the reclosable fastener assembly **130** include the second continuous elongated profile strip **138**. In this embodiment, the second continuous elongated profile strip **138** may be flat. The second continuous elongated profile strip **138** may also be manufactured from polyethylene. Therefore, the second continuous elongated profile strip **138** can be manufactured from the same material and with the same dimensions as the first continuous elongated profile strip **136**. In this embodiment, As depicted in FIG. **7**, the second continuous elongated profile strip **138** may include a first rib **750**, second rib **754** and third rib **758**. The first rib **750**, second rib **754** and third rib **758** along an edge of the second profile strip **138**, thereby defining a profile adherence surface **746** between ribs **750**, **754**, **758** and the back wall **110** to which the second continuous elongated profile strip **138** attaches. The first rib **750**, second rib **754** and third rib **758** of the second continuous elongated profile strip **138** extend the length, L, of the back wall **110**. The ribs **630**, **634**, **638** associated with the first continuous elongated profile strip **136** can interlock with the ribs **750**, **754**, **758** associated with the second continuous elongated profile strip **138**, causing the reclosable back-seam bag **100** to close. The reclosable back-seam bag **100** (FIGS. **1-3**) can be then be opened by grasping the gripping flange **142** and back wall connecting flange **144**, and then applying a force that facilitates separating the flanges **142** and **144**.

[0067] FIG. **8**A illustrates another embodiment of the reclosable bag in which the reclosable fastener assembly **130** may include two ends, a first continuous elongated profile strip **136** having a front wall connecting flange **140** and a second continuous elongated profile strip **138** having a back wall connecting flange **144**. The first continuous elongated profile strip **136** may be configured with a male interlocking profile **802** that may be extruded with at least one male interlocking member **804**. The second continuous elongated profile strip **138** may be configured with a female interlocking profile **806** having at least one female interlocking member **808**. The first continuous elongated profile strip **136** may be releasably connected to the second continuous elongated profile strip **138** by engaging the male interlocking member **804** with the female interlocking member **808**. The male interlocking member **804** can be configured to enable the male interlocking profile **802** to be separated from the female interlocking profile **806** with a substantially equal opening force when being separated in a direction toward the top seal as when separating the male interlocking profile from the female interlocking profile in a direction toward the bottom seal. This causes a differential opening force, applied to the inside and/or outside the reclosable back-seam bag, to remain balanced.

[0068] In a preferred embodiment, when the reclosable back-seam bag **100** is desired to be opened, a user may pinch the front wall **108** and the back wall **110** using fingers of opposite hands, and then, open the bag **100** by pulling the pinched front wall **108** and back wall **110** apart from one another. Such mechanism may be referred to as "pinch-'n-pull". The separation (i.e., pulling apart) of the front wall **108** from the back wall **110** allows the open male and female interlocking members **804**, **808** to easily disengage from one another so that separation of the front wall **108** from the back wall **106** can cause the top seal **104** to separate from within as desired by a user.

[0069] It is contemplated that different configurations of the front wall connecting flange **140** associated with the first continuous elongated profile strip **136** and the back wall connecting flange **144** associated with the second continuous elongated profile strip **138** can be utilized to facilitate this pinch-'n-pull mechanism. As an example, in one embodiment (see FIG. **8**A), the front wall connecting flange **140** may be

configured to have a height substantially similar to the height of the back wall connecting flange **144**. In another embodiment (see FIG. **8**B), back wall connecting flange **144** may be configured with an additional back wall connecting flange **844** so that the combined height of the flanges **144** and **844** is greater than the height of the front wall connecting flange **140**. In another embodiment (see FIG. **8**C), the front wall connecting flange **140** may be configured with an additional front wall connecting flange **840** so that the combined height of the front wall connecting flange **140** and the additional front wall connecting flange **840** is greater than the height of the back wall connecting flange **144**. In yet another embodiment (see FIG. **8**D), both the front wall connecting flange **140** and the back wall connecting flange **144** may be, respectively, configured with an additional front wall connecting flange **840** and an additional back wall connecting flange **844**. Such a configuration as depicted in FIG. **8**D can result in the combined heights of flanges **144** and **844** being substantially similar to the combined heights of flanges **140** and **840**. Thus, FIGS. **8**A-**8**D illustrate embodiments of the reclosable bag in which the reclosable fastener assembly may include two ends, a first continuous elongated profile strip having a front wall connecting flange and a second continuous elongated profile strip having a back wall connecting flange, the flanges respectively extending upward, downward or both on the walls of the bag.

[0070] FIG. **9** illustrates a plurality of reclosable fastener assemblies that each include a male part and a female part. Each reclosable fastener assembly **130** may include fasteners **928** that comprise a male part **962** and a female part **964**, parts **962** and **964** being joined to each other as clearly seen in FIG. **9**. The distal ends of each fastener **928** can be flattened so as to permit the fasteners **928** to be free and separate from another adjacent fastener **928**. This "free and separate" relationship between adjacent ones of the fasteners **928** can be indicated by reference numeral **970**. However, it is to be understood that adjacent fasteners can also be attached to each other, continuously or by spot tacking, dependent on actual operating conditions. Such a structure is considered to be within the scope of this invention.

[0071] FIG. **10** illustrates another embodiment of the reclosable bag having a frangible access portion to access the contents of the reclosable bag. In this embodiment, the frangible access portion **154** is substantially parallel to the reclosable fastener assembly **130** and may be provided through the front wall of the reclosable bag by means of one or more score lines. The frangible access portion **154** is disposed within the bag body **102** adjacent to the reclosable fastener assembly **130**. In this embodiment, the top seal **104** is provided above the frangible access portion **154**, and a bottom seal **106** is provided below the frangible access portion **154**. Such frangible access portion **154** may also be disposed below the back wall connecting seal **148**. Upon tear opening, peel opening, or opening by delamination, the frangible access portion **154** can expose the reclosable fastener assembly **130** from which a user can then gain access to the contents of the bag **102**. The frangible access portion **154** may also be formed with a conventional perforating die, and can be disposed on front wall **108** of the bag body **102** adjacent the reclosable fastener assembly **130** and above the continuous airtight and/or watertight lower seal **146**. The continuous airtight and/or watertight lower seal **146** is disposed along the length of the reclosable fastener assembly **130** and may be positioned below the first continuous profile strip **136** and the second continuous profile strip **138** (not shown). It is recognized that the characteristics of the first continuous profile strip **136** and the second continuous profile strip **138** associated with the reclosable fastener assembly **130** may include the features described above with respect to the earlier described figures. It is appreciated that seal **146** may be placed such that seal **146** connects the reclosable fastener assembly **130** to the front wall **108**.

[0072] FIG. **11**A illustrates an embodiment of a two-flanged reclosable bag having a re-sealable first zipper patch **1106** that includes a first zipper flange front wall seal **1102** and a first zipper flange back wall seal **1104** (see FIG. **11**B). The re-sealable first zipper patch **1106** may be affixed on the front wall **108**. The first zipper flange front wall seal **1102** can then be made on the first zipper patch **1106** on the open web of film. The first zipper flange back wall seal **1104** can be made on a second zipper patch **1140**, while the tube of film is being formed into a bag. Of course, the first zipper patch **1106** and the second zipper patch **1140** can be interchanged such that the second zipper patch **1140** and its associated configurations can appear on the front wall **108**, while the first zipper patch **1106** and its associated configurations can appear on the back wall **110**. The reclosable bag also incorporates a zipper profile **1108**, which may include a male interlocking profile **1120** and a female interlocking profile **1130** (see FIG. **11**C). The male interlocking profile **1120** may be attached to the back wall of the reclosable bag via the second zipper patch **1140**. The male interlocking profile **1120** may have a cross section in the shape of an arrowhead. The female interlocking profile **1130** may be attached to the front wall **108** via the first zipper patch **1106**, and adjacent to the male interlocking profile **1120**. FIG. **11**B illustrates the reclosable bag **100** in a closed position, wherein the female interlocking profile **1130** may be configured with two curved members so as to form a channel in between the curved members such that the male interlocking member can be snappingly engaged to join male and female interlocking profiles **1120**, **1130** respectively together to close the reclosable bag **100**. FIG. **11**C shows the reclosable bag **100** in an open position, wherein the male interlocking member **1120** can be separated from the female interlocking profile **1130** with a substantially equal opening force when being separated in a direction toward the top seal as when separating the male interlocking profile from the female interlocking profile in a direction toward the bottom seal. The configuration of the first zipper flange front wall seal **1102** and the first zipper flange back wall seal **1104** causes a differential opening force, that is applied to the inside and/or outside the reclosable back-seam bag, to remain balanced. Therefore, when the reclosable back-seam bag is desired to be opened, a user may pinch the front wall **108** and the back wall **110** using fingers of opposite hands, and then, open the bag **100** by pulling the pinched front wall **108** and back wall **110** apart from one another. Such mechanism may be referred to as "pinch-'n-pull". The separation (i.e., pulling apart) of the front wall **108** from the back wall **110** allows the interlocked male and female interlocking profile **1120**, **1130** to disengage from one another. Further separation of the front wall **108** from the back wall **110** can cause the top seal **104** to separate from within as desired by a user. The top seal may be configured to include a peelable seal such that the peelable seal can be peeled off when the bag is desired to be opened. In this or other embodiments, the top seal **104** can be torn opened, peeled opened, or delaminated so as to open the reclosable bag.

[0073] In an embodiment, the top seal **104** can be configured with an airtight and watertight seal that may be provided along an interconnection of a length of the first zipper patch **1106** and the second zipper patch **1140**, and disposed in a location above the first zipper flange front wall seal **1102** and the first zipper flange back wall seal **1104**. In this embodiment, the bag, first zipper patch and second patch can comprise a polyethylene material. In another embodiment, the top seal **104** can be configured with a permeable seal that may be provided along an interconnection of a length of the first zipper patch **1106** and the second zipper patch **1140**. The permeable seal may be disposed in a location above the first zipper flange front wall seal **1102** and the first zipper flange back wall seal **1104**. In this embodiment, the bag **100**, first zipper patch **1106** and second zipper patch **1140** can be comprise a polypropylene material.

[0074] The reclosable bag can also include a frangible access portion **154** for exposing the contents of the reclosable bag. In this embodiment, the frangible access portion **154** is substantially parallel to the first zipper patch **1106** and may be provided through the front wall **108** of the reclosable bag by means of perforations. The reclosable bag can also contain one or more score lines **158** that may be disposed in on the front wall **108** and parallel to the frangible access portion **154** and the first zipper patch **1106**. The frangible access portion **154** is disposed on the front wall **108** between a lower portion of the top seal **104** and the upper portion of the first zipper patch **1106**. Upon tear opening, the frangible access portion **154** can then expose the contents of the bag **102**.

[0075] FIGS. **12**A-**12**C illustrates an embodiment of a front view of a three-flanged reclosable bag having a first zipper flange front wall seal **1102**, a second zipper flange front wall seal **1202** attached to the re-sealable first zipper patch **1106**, and an first zipper flange back wall seal **1104** attached to a back wall zipper patch. The second zipper flange front wall seal **1202** provides additional support to the re-sealable first zipper patch **1106** such that when a user desires to open the reclosable bag, by pulling a pinched front wall **108** apart from the back wall **110**, an equal opening force may be exerted from the to the reclosable as well as to the user. As with FIGS. **11**A-**11**C above, the first zipper flange front wall seals **1102** and the second zipper flange front wall seal **1202** are made on the first zipper patch **1106** on open web. As illustrated in FIG. **12**B, the first zipper flange back wall seal **1104** can be made on a second zipper patch **1140**. FIG. **12**B also illustrates a side view profile of the reclosable bag when closed, wherein the curved members of the female interlocking profile **1130** are configured to form a channel such that the male interlocking member **1120** can be snappingly engaged to join the male and female interlocking profiles **1120**, **1130** respectively together. FIG. **12**C illustrates a side view profile of the reclosable bag when opened, wherein the male interlocking member **1120** can be separated from the female interlocking profile **1130** with a substantially equal opening force when being separated in a direction toward the top seal as when separating the male interlocking profile from the female interlocking profile in a direction toward the bottom seal. The second zipper flange front wall seal **1202** provides additional support to the re-sealable first zipper patch **1106** for attachment to the reclosable bag so as to cause a differential opening force, applied to the inside and/or outside the reclosable back-seam bag, to remain balanced. The other features of the reclosable bag **100** have been previously described in FIGS. **11**A-**11**C.

[0076] FIGS. **13**A-**13**C illustrates an embodiment of different views of a four-flanged reclosable bag having a first zipper flange front wall seal **1102** and a second zipper flange front wall seal **1202** attached to the re-sealable first zipper patch **1106**, as well as a first zipper flange back wall seal **1104** and a second zipper flange back wall seal **1304**. In this embodiment, as illustrated in FIG. **13**A, front wall tack-down seals may **1360** be provided on the first zipper patch **1106** on open web (or during a zipper extrusion process). A corresponding number of back wall tack-down seals **1370** are provided as well as on the second zipper patch **1140**. The tack-down seals may be configured as a light continuous seal that may be provided on the first zipper patch **1106** and the second zipper patch **1140**. The front wall tack-down seals **1360** are configured to maintain the second zipper flange back wall seal **1304** in a close relationship to the second zipper flange front wall seal **1202**, so as to prevent the zipper profile **1108** from jamming a bag making machine during manufacture. Such jamming can occur during, for example, a manufacture process that can involve movement of a web through the reclosable bag, over forming collar and down a fill tube. FIG. **13**B shows the front wall tack-down seals **1360** and the back wall tack-down seals **1370** in close proximity to one another when the reclosable bag is closed. Such engagement of the front wall tack-down seals **1360** and the back wall tack-down seals **1370** may be facilitated due to the configurations of each of these tack-down seals. The tack-down seals serve to maintain the second zipper flange back wall seal **1304** in a close proximity to the second zipper flange front wall seal **1202** such that the first zipper patch **1106** and the second zipper patch **1140** are prevented from jamming a bag making machine during manufacture. As an example, the front wall tack-down seals **1360** can be configured to have a female profile configuration while the back wall tack-down seals **1370** can be configured to have a male profile configuration. Therefore, when the bag is closed, the front wall tack-down seals **1360** and the back wall tack-down seals **1370** can serve to maintain the second zipper flange back wall seal **1304** in a close proximity to the second zipper flange front wall seal **1202**. FIG. **13**C illustrates a side view profile of the reclosable bag when opened, wherein the male interlocking member **1120** can be separated from the female interlocking profile **1130** with a substantially equal opening force when being separated in a direction toward the top seal **104** as when separating the male interlocking profile from the female interlocking profile in a direction toward the bottom seal. The four flanges (i.e., first zipper flange front wall seal **1102**, second zipper flange front wall seal **1202**, first zipper flange back wall seal **1104**, and second zipper flange back wall seal **1304**) combine to provide additional support to the reclosable bag so as to cause a differential opening force, applied to the inside and/or outside the reclosable back-seam bag, to remain balanced. The other features of the reclosable bag **100** have been previously described in FIGS. **11**A-**11**C.

[0077] FIGS. **14**A-**14**C illustrates another embodiment of the reclosable bag that includes a flange-to-flange peelable adhesive or co-extruded bead attached to the re-sealable first zipper patch **1106**. The embodiment described in FIGS. **13**A-**13**C is similar to this embodiment illustrated in FIGS. **14**A-**14**C except that the tack seals of FIGS. **13**A-**13**C are replaced with flange-to-flange peelable adhesive or co-extruded bead **1460**. The flange-to-flange peelable adhesive or co-extruded bead **1460** are configured to maintain the second zipper flange back wall seal **1304** in a close relationship to the second

zipper flange front wall seal **1202**, so as to prevent the first zipper patch **1106** and the second zipper patch **1140** from jamming a bag making machine during manufacture. Such jamming can occur during, for example, a manufacture process that can involve movement of a web through the reclosable bag, over forming collar and down a fill tube. The other features of the reclosable bag **100** have been previously described in FIGS. **11**A-**11**C.

[0078] In another embodiment, either tack seals (FIGS. **13**A-**13**C) or the flange-to-flange peelable adhesive or co-extruded bead **1460** of FIGS. **14**A-**14**C can be replaced with a frangible membrane that connects the front wall flanges with the back wall flanges. Such frangible membrane **1560**, as illustrated in FIG. **15**, also serve to maintain the second zipper flange back wall seal **1304** in a close relationship to the second zipper flange front wall seal **1202**, so as to prevent the first zipper patch **1106** and the second zipper patch **1140** from jamming a bag making machine during manufacture. Such jamming can occur during, for example, a manufacture process that can involve movement of a web through the reclosable bag, over forming collar and down a fill tube. The other features of the reclosable bag **100** have been previously described in FIGS. **11**A-**11**C.

[0079] FIG. **16** illustrates another embodiment of a side view of a four-flanged (**1102**, **1104**, **1202**, **1304**) reclosable bag in which the male interlocking member is provided in an open disengaged position when the top seal of the bag remains sealed. In this embodiment, the male interlocking member **1120** is disengaged from the female interlocking member **1130**, while the top seal **104** remains sealed. The bag may be easily opened by pinching the front and back walls **108**, **110** of the bag **100** and simultaneously separating the walls until the top seal **104** is ruptured or peeled open. The open configuration of the fastener profile (i.e., the male and female interlocking members **1120**, **1130**) facilitates such opening. The lengths of each of the first zipper patch **1106** and the second zipper patch **1140** may each be disposed to be shorter in length than the width of the bag. Subsequently, easy access is permitted from either the top of the bag, or from rupturing the frangible access portion **154** (not shown), and then, separating the fastener profile. It is contemplated that this configuration can be applicable for two-flanged and three-flanged reclosable bags as well. Further details of each of the four flanges **1102**, **1104**, **1202**, **1304** and other features of the reclosable bag have been previously described.

[0080] FIGS. **18**A-**18**C illustrate different views of an embodiment of a four-flanged reclosable bag having a flange overlap configured with overlap seals. In this embodiment, as shown in FIGS. **18**A and **18**B for example, overlap seals **1860** may be provided on a flange overlap **1870**, which can then be connected to at least one of the first zipper patch **1106** and/or the second zipper patch **1140** on open web (or during a zipper extrusion process), when the reclosable bag is in a closed position. As illustrated in FIG. **18**B, when the reclosable bag is in a closed position, the overlap seals **1860** can be constructed and arranged to maintain the second zipper flange back wall seal **1304** in a close relationship to the second zipper flange front wall seal **1202**, so as to prevent the zipper profile **1108** from jamming a bag making machine during manufacture. Such jamming can occur during, for example, a manufacture process that can involve movement of a web through the reclosable bag, over forming collar and down a fill tube. The overlap seals **1860** may be configured to break open relatively easily when the bag **100** is opened by a user. In an embodiment, such overlap seals **1860** can be configured as at least one of tack-down seals, peelable adhesives, light continuous seal, and/or frangible membrane that may be provided on the first zipper patch **1106** and/or the second zipper patch **1140**. FIG. **18**C illustrates a side view profile of the reclosable bag when opened, wherein the male interlocking member **1120** can be separated from the female interlocking profile **1130** with a substantially equal opening force when being separated in a direction toward the top seal **104** as when separating the male interlocking profile from the female interlocking profile in a direction toward the bottom seal. In this embodiment, first zipper flange front wall seal **1102** and second zipper flange front wall seal **1202** are attached to the re-sealable first zipper patch **1106**, and first zipper flange back wall seal **1104** and a second zipper flange back wall seal **1304** are attached to the second zipper patch **1140**. Each of the four flanges (i.e., first zipper flange front wall seal **1102**, second zipper flange front wall seal **1202**, first zipper flange back wall seal **1104**, and second zipper flange back wall seal **1304**) as well as the flange overlap **1870** combine to provide additional support to the reclosable bag so as to cause a differential opening force, applied to the inside and/or outside the reclosable back-seam bag, to remain balanced. The other features of the reclosable bag **100** have been previously described in FIGS. **11**A-**11**C.

[0081] FIG. **17** illustrates an exemplary machine that can be used to manufacture a reclosable back-seam bag described herein. Such reclosable back-seam bag machine may be configured by supplying a desired web material, whether single ply or laminated, to a form, fill and seal machine **1700**. Such machines are well known in the art and may include a combination bag forming and filling nozzle cylinder **1729** that can be adapted to receive products to be filled into the formed bags from a hopper **1730**. Bag making web **1731**, which may carry the reclosable fastener or zipper means **1727**, can extend across the formation axis of the web at suitable longitudinal spaced intervals along the web, and may be guided by means of guide roller **1732** to the cylindrical outer surface of the cylinder **1729**.

[0082] At the cylinder **1729**, a folding or wrapping arm device **1733** guides and wraps the web **1731** about the cylinder **1729** with the longitudinal margins of the web brought together into a longitudinal, laminar closure fin assembly **1734**. Sealing of the fin assembly **1734** into a closure seam may be achieved by means of a pair of vertical sealing bars **1735** which are movable into clamping and sealing engagement with the closure fin assembly **1734**, as indicated by the solid directional arrows **1737**. Such vertical sealing bars may be configured with a sinusoidal wave seal (e.g., a sine wave seal **1750**) that may serve to maintain the seals. The bars **1735** are then separable as indicated by the dashed arrows **1738** to release the heat sealed seam section of fin **1734** of the now closed bag forming tube of the web material.

[0083] The longitudinally sealed tube is advanced by bag length increments. Such advancement is achieved by means of a pair of horizontal, parallel bag end sealing bars **1739**, which operate by clampingly engaging the bag web tube below the end of the cylindrical forming and filling nozzle member **1729** for simultaneously sealing the top end of a filled bag section **1720** and the bottom end of the next succeeding bag section. Such horizontal sealing bars **1739** may be configured with a sine wave seal **1750** that may serve to maintain the seals. The sealing bars **1739** may be configured to grip the bag web tube, and then move downwardly by a bag

section length as indicated by the directional arrow **1740**, so as to pull and advance the entire bag making tube one bag increment downwardly. As this occurs, the next succeeding bag can be filled with product that may be dropped down the cylinder **1729** from the hopper **1730**. As the sealing and pull down bars **1739** reach the lower end of their sealing and pulldown stroke, a severance means such as a cutoff bar **1741** can cut midway across the seal **1742** that has been effected by the bars **1739**, thus releasing the previously filled bags **1720** which may then be handled as desired, such as to be packed for market. Having completed its downstroke, the sealing bar and cutoff device **1739**, **1741** may return as indicated by the dashed directional arrow **1743** to its starting position adjacent to the lower end of the cylinder **1729**. It will be understood, of course, that operation of the vertical sealing bars **1735**, and the horizontal sealing and pulldown bars **1739** are operated in coordinated cyclical relation, as is well known in the art for form, fill and seal machines of this type.

[0084] While this disclosure includes particular examples, it is to be understood that the disclosure is not so limited. Numerous modifications, changes, variations, substitutions, and equivalents will occur to those skilled in the art without departing from the spirit and scope of the present disclosure upon a study of the drawings, the specification, and the following claims.

What we claim is:

1. A reclosable back-seam bag, comprising:

a bag body having a top seal and a bottom seal, and a front wall and a back wall, the front wall being joined to the back wall at the top seal and the bottom seal;

a first zipper patch having at least a first zipper flange front wall seal disposed on the front wall, and a second zipper patch having a first zipper flange back wall seal disposed on the back wall,

said first zipper patch including a first zipper profile having a female interlocking profile,

said second zipper patch including second zipper profile having a male interlocking profile, said first zipper profile being releasably connected to said second zipper profile strip by engaging the male interlocking profile with the female interlocking profile,

wherein said male interlocking profile and said female interlocking profile are each configured to cause said male interlocking profile to be separated from said female interlocking profile with a substantially equal opening force when being separated in a direction toward said top seal as when separated in a direction toward said bottom seal; and

at least one frangible access portion disposed substantially parallel to said zipper patch for exposing contents of the reclosable bag, said frangible access being disposed through said top seal of said bag body.

2. The reclosable back-seam bag according to claim **1**, wherein the first zipper flange front wall seal is configured to have a length substantially similar to a length of the first zipper flange back wall seal.

3. The reclosable back-seam bag according to claim **1**, wherein the first zipper patch is configured with a second zipper flange front wall seal disposed on the front wall such that the first zipper profile and the second zipper profile are prevented from jamming a bag making machine during manufacture.

4. The reclosable back-seam bag according to claim **1**, wherein the first zipper patch and the second zipper patch are configured with tack-down seals to each other to maintain the second zipper flange back wall seal in a close proximity to the second zipper flange front wall seal such that the first zipper patch and the second zipper patch are prevented from jamming a bag making machine during manufacture.

5. The reclosable back-seam bag according to claim **1**, wherein the first zipper patch and the second zipper patch are configured with at least one peelable adhesive that adheres the second zipper flange front wall seal to the second zipper flange back wall seal, the at least one peelable adhesive being configured to maintain the second zipper flange back wall seal in close proximity to the second zipper flange back wall seal such that the first zipper patch and the second zipper patch are prevented from jamming a bag making machine during manufacture.

6. The reclosable back-seam bag according to claim **1**, wherein the first zipper patch and the second zipper patch are connected by a frangible membrane to maintain the second zipper flange back wall seal in close proximity to the second zipper flange front wall seal, and to prevent the first zipper patch and the second zipper patch from jamming a bag making machine during manufacture of the reclosable bag.

7. The reclosable back-seam bag according to claim **1**, further comprising a flange overlap that is connected to at least one of the first zipper patch and/or the second zipper patch, the flange overlap being configured with at least one overlap seal that causes the flange overlap to adhere to at least one of the first zipper patch and/or the second zipper patch so as to maintain the second zipper flange front wall seal in close proximity to the second zipper flange back wall seal such that the first zipper patch and the second zipper patch are prevented from jamming a bag making machine during manufacture.

8. The reclosable back-seam bag according to claim **1**, wherein the top seal comprises a peelable seal, the peelable seal being configured to be peeled open when the bag is opened.

9. A reclosable back-seam bag including a bag body having a top seal, a bottom seal, a front wall and a back wall, the front wall being joined to the back wall at the top seal and the bottom seal, comprising:

a first zipper patch having a first zipper flange front wall seal disposed on the front wall, said first zipper patch including a female interlocking profile; and

a second zipper patch having a first zipper flange back wall seal disposed on the back wall, said second zipper patch including a male interlocking profile, the male interlocking profile constructed and arranged to be releasably connected with the female interlocking profile, said first and second zipper patches each being shorter in length than the width of said bag, and

wherein the male interlocking profile is disposed in a disengaged position relative to the female interlocking profile when the top seal is sealed and said bag is formed.

10. The reclosable back-seam bag according to claim **9**, further comprising:

at least one frangible access portion disposed substantially parallel to said first zipper patch for exposing contents of the reclosable bag, said frangible access being disposed through said top seal of said bag body.

11. The reclosable back-seam bag according to claim **10**, wherein the first zipper flange front wall seal is configured to have a length substantially similar to a length of the first zipper flange back wall seal.

12. The reclosable back-seam bag according to claim **10**, wherein the first zipper patch is configured with a second zipper flange front wall seal so that a combined height of the first zipper flange front wall seal and the second zipper flange front wall seal is greater than a height of the first zipper flange back wall seal.

13. The reclosable back-seam bag according to claim **10**, wherein the second zipper patch is configured with a second zipper flange back wall seal so that the combined height of the first zipper flange back wall seal and the second zipper flange back wall seal is greater than a height of the first zipper flange front wall seal.

14. The reclosable back-seam bag according to claim **10**, wherein the first zipper patch and the second zipper patch are, respectively, configured with a second zipper flange front wall seal and a second zipper flange back wall seal.

15. The reclosable back-seam bag according to claim **14**, wherein the first zipper patch and the second zipper patch are each configured with tack-down seals to maintain the second zipper flange back wall seal in a close proximity to the second zipper flange front wall seal such that the first zipper patch and the second zipper patch are prevented from jamming a bag making machine during manufacture.

16. The reclosable back-seam bag according to claim **14**, wherein the first zipper patch and the second zipper patch are each configured with at least one peelable adhesive that adheres the second zipper flange front wall seal to the second zipper flange back wall seal, the at least one peelable adhesive being configured to maintain the second zipper flange back wall seal in close proximity to the second zipper flange front wall seal such that the first zipper patch and the second zipper patch are prevented from jamming a bag making machine during manufacture.

17. The reclosable back-seam bag according to claim **14**, wherein the first zipper patch and the second zipper patch are each configured with a frangible membrane to maintain the second zipper flange back wall seal in close proximity to the second zipper flange front wall seal, and to prevent the first zipper patch and the second zipper patch from jamming a bag making machine during manufacture of the reclosable bag.

18. The reclosable back-seam bag according to claim **14**, further comprising a flange overlap that is connected to at least one of the first zipper patch and/or the second zipper patch, the flange overlap being configured with at least one overlap seal that causes the flange overlap to adhere to at least one of the first zipper patch and/or the second zipper patch so as to maintain the second zipper flange front wall seal in close proximity to the second zipper flange back wall seal such that the first zipper patch and the second zipper patch are prevented from jamming a bag making machine during manufacture.

19. The reclosable back-seam bag according to claim **10**, further comprising:

said first and second zipper patches forming, when interconnected, an airtight and watertight seal.

20. The reclosable back-seam bag according to claim **19**, wherein the bag, first zipper patch and second patch comprise a polyethylene material.

21. The reclosable back-seam bag according to claim **10**, further comprising:

a permeable seal along an interconnection of a length of the first zipper patch and the second zipper patch, the permeable seal being positioned above the first zipper flange front wall seal and the first zipper flange back wall seal.

22. The reclosable back-seam bag according to claim **21**, wherein the bag, first zipper patch and second patch comprise a polypropylene material.

23. The reclosable back-seam bag according to claim **10**, wherein the lengths of each of the first zipper patch and the second zipper patch are each disposed to extend less than the width of the bag.

24. The reclosable back-seam bag according to claim **9**, wherein the top seal comprises a peelable seal, the peelable seal being configured to be peeled off when the bag is opened.

25. A method of opening a reclosable back-seam bag including a bag body having a top seal, a bottom seal, a front wall and a back wall, the front wall being joined to the back wall at the top seal and the bottom seal, a first zipper patch including a female interlocking profile, and a second zipper patch including a male interlocking profile, the method comprising:

pinching the front wall and the back wall;

simultaneously separating each of pinched front wall and back wall; and

tearing, peeling or delaminating open the top seal, based on a force exerted from the separating, with the male interlocking profile and the female interlocking profile being disengaged relative to each other prior to and during said separation.

26. A method of manufacturing a reclosable back-seam bag, comprising:

making a bag body having a top portion, a bottom portion, a front wall and a back wall, the front wall being joined to the back wall at the top portion and the bottom portion;

sealing a first zipper patch on the front wall, the front zipper patch including a female interlocking profile;

sealing a second zipper patch on the back wall, the second zipper patch including a male interlocking profile; and

sealing the top portion to form a top seal and the bottom portion to form a bottom seal, wherein the male interlocking profile is disengaged from the female interlocking profile when the top seal is sealed.

27. A method of manufacturing a reclosable back-seam bag, comprising:

making a bag body having a top portion, a bottom portion, a front wall and a back wall, the front wall being joined to the back wall at the top portion and the bottom portion;

sealing, via a sinusoidal seal, a first zipper patch on the front wall, the front zipper patch including a female interlocking profile;

sealing, via a sinusoidal seal, a second zipper patch on the back wall, the second zipper patch including a male interlocking profile; and

sealing, via a sinusoidal seal, the top portion to form a top seal and the bottom portion to form a bottom seal, wherein the male interlocking profile is disengaged from the female interlocking profile when the top seal is sealed.

28. The method according to claim **27**, wherein the sinusoidal seal comprises a sine wave seal.

29. A reclosable back-seam bag, comprising:

a bag body having a top seal and a bottom seal, and a front wall and a back wall, the front wall being joined to the back wall at the top seal and the bottom seal,

the back wall being formed from a rectangular sheet of film folded along two longitudinal folds, and having overlapped and sealed edges of the rectangular sheet to form said back seam, said rectangular sheet having an inside surface, and said back wall having two sides, each side being defined between said back seam and a respective one of said longitudinal folds;

a reclosable fastener including two ends, a first continuous elongated profile strip and a second continuous elongated profile strip, said first continuous elongated profile strip being releasably connected to said second continuous elongated profile strip,

said first continuous elongated profile strip having a front wall connecting flange and at least one gripping flange, both said front wall connecting flange and said gripping flange having a width greater than a width of said first continuous elongated profile strip,

said second continuous elongated profile strip having a back wall connecting flange, said back wall connecting flange having a width greater than a width of said second continuous elongated profile strip,

the length of said reclosable fastener being less than the combined lengths of said two sides that form said back panel;

said front wall connecting flange being connected to said inside surface of said rectangular sheet and said front wall of said bag body at a front wall seal, said front wall seal being substantially parallel to said top seal and spaced between said bottom seal and said profile strips,

said back wall connecting flange being connected to said inside surface of said rectangular sheet and said back wall at a back wall connecting seal, said back wall connecting seal being spaced between said profile strips and said top seal;

a side seal at each end of said reclosable fastener, each said side seal connecting an end of said reclosable fastener to the inside surface of said rectangular sheet of film inwardly of said longitudinal folds of said bag body thereby preventing air or liquids from entering or leaving said bag through said ends of said reclosable fastener, and each said side seal being provided to said reclosable fastener prior to attachment of said reclosable fastener to said front wall and said back wall, without said side seal being sealed again to connect the ends of said reclosable fastener to said inside surface of said front wall and an inside surface of said back wall; and

a frangible access portion substantially parallel to said reclosable fastener for exposing said releasable fastener, said frangible access portion being disposed on said front wall and on said back wall of said bag body adjacent said reclosable fastener and above said back wall connecting seal.

30. The reclosable back-seam bag according to claim **29**, wherein said frangible access portion comprises a plurality of perforations.

31. The reclosable back-seam bag according to claim **29**, wherein said first continuous elongated profile strip and said second continuous elongated profile strip each have respective back portions thereof, and in which said first continuous elongated profile strip back portion can pivot in relation to said inside surface of said rectangular sheet.

32. The reclosable back-seam bag according to claim **29**, wherein said first continuous elongated profile strip and said second continuous elongated profile strip each have respective back portions thereof, and in which said second continuous elongated profile strip back portion can pivot in relation to said inside surface of said rectangular sheet.

33. The reclosable back-seam bag according to claim **29**, wherein said first continuous elongated profile strip and said second continuous elongated profile strip each have respective back portions thereof, in which said first continuous elongated profile strip back portion can move in relation to said inside surface of said rectangular sheet, and in which said second continuous elongated profile strip back portion can pivot in relation to said inside surface of said rectangular sheet.

34. The reclosable back-seam bag according to claim **29**, wherein said reclosable fastener ends are substantially flattened ends.

35. The reclosable back-seam bag according to claim **29**, wherein said at least one gripping flange includes at least one continuous rib disposed at a distal end of said at least one gripping flange.

36. The reclosable back-seam bag according to claim **29**, wherein said gripping flange includes a plurality of continuous, substantially parallel ribs disposed on said at least one gripping flange.

37. The reclosable back-seam bag according to claim **29**, wherein said first continuous profile strip, said gripping flange and said bag wall connecting flange comprise a single, extruded, flexible polymeric material.

38. The reclosable back-seam bag according to claim **29**, wherein said second continuous profile strip and said back wall connecting flange comprise an extruded, flexible polymeric material.

39. The reclosable back-seam bag according to claim **29**, wherein said gripping flange and said bag wall connecting flange comprise a web and in which said first continuous profile strip is sealed to said web.

40. The reclosable back-seam bag according to claim **29**, wherein the height of said gripping flange is substantially less than the height of said back wall connecting flange.

41. The reclosable back-seam bag according to claim **29**, wherein the height of said gripping flange is substantially less than half the height of said back wall connecting flange.

42. The reclosable back-seam bag according to claim **29**, wherein said back wall connecting flange is of a sufficient thickness to provide for sealing of said back wall connecting flange to said back wall while not permitting sealing of said back wall connecting flange to said front wall.

43. A reclosable back-seam bag, comprising:

a bag body having a top seal and a bottom seal, and a front wall and a back wall, the front wall being joined to the back wall at the top seal and the bottom seal; and

a reclosable fastener including two ends, a first continuous elongated profile strip having a front wall connecting flange and a second continuous elongated profile strip having a back wall connecting flange,

said first continuous elongated profile strip having a male interlocking profile including at least one male interlocking member,

said second continuous elongated profile strip having a female interlocking profile including at least one female

interlocking member, said first continuous elongated profile strip being releasably connected to said second continuous elongated profile strip by engaging the male interlocking member with the female interlocking member,

wherein said male interlocking member is being configured so as to cause said male interlocking profile to be separated from said female interlocking profile with a substantially equal opening force when being separated in a direction toward said top seal as when separated in a direction toward said bottom seal.

44. The reclosable back-seam bag according to claim **43**, wherein said front wall connecting flange has a height greater than a height of said first continuous elongated profile strip.

45. The reclosable back-seam bag according to claim **43**, wherein said back wall connecting flange has a height greater than a height of said second continuous elongated profile strip.

46. The reclosable back-seam bag according to claim **43**, wherein said the back wall is configured to be formed from a rectangular sheet of film folded along two longitudinal folds, and having overlapped and sealed edges of the rectangular sheet to form said back seam, said rectangular sheet having an inside surface, and said back wall having two sides, each side being defined between said back seam and a respective one of said longitudinal folds.

47. The reclosable back-seam bag according to claim **43**, wherein the front wall connecting flange is configured to have a length substantially similar to a length of the back wall connecting flange.

48. The reclosable back-seam bag according to claim **43**, wherein the back wall connecting flange is configured with an additional back wall connecting flange so that a combined length of the back wall connecting flange and the additional back wall connecting flange is greater than a length of the front wall connecting flange.

49. The reclosable back-seam bag according to claim **43**, wherein the front wall connecting flange is configured with an additional front wall connecting flange so that the combined length of the front wall connecting flange and the additional front wall connecting flange is greater than the length of the back wall connecting flange.

50. The reclosable back-seam bag according to claim **43**, wherein the front wall connecting flange and the back wall connecting flange are respectively configured with an additional front wall connecting flange and an additional back wall connecting flange.

51. A reclosable back-seam bag, comprising:

a bag body having a top seal and a bottom seal, and a front wall and a back wall, the front wall being joined to the back wall at the top seal and the bottom seal;

a reclosable fastener including two ends, a first continuous elongated profile strip associated with the front wall and a second continuous elongated profile strip associated with the back wall,

said first continuous elongated profile strip having a male interlocking profile including at least one male interlocking member,

said second continuous elongated profile strip having a female interlocking profile including at least one female interlocking member, said first continuous elongated profile strip being releasably connected to said second continuous elongated profile strip by engaging the male interlocking member with the female interlocking member,

wherein said male interlocking member is being configured so as to cause said male interlocking profile to be separated from said female interlocking profile with a substantially equal opening force when being separated in a direction toward said top seal as when separated in a direction toward said bottom seal; and

at least one frangible access portion disposed substantially parallel to said reclosable fastener assembly for exposing said releasable fastener assembly, said frangible access being disposed on said front wall of said bag body.

52. The reclosable back-seam bag according to claim **51**, wherein said at least one frangible access portion is disposed adjacent said reclosable fastener assembly.

53. The reclosable back-seam bag according to claim **51**, wherein said at least one frangible access portion is disposed between a lower portion of said reclosable fastener assembly and said bottom seal.

54. The reclosable back-seam bag according to claim **51**, wherein said at least one frangible access includes a first frangible access portion disposed adjacent said reclosable fastener assembly, and a second frangible access portion disposed between a lower portion of said reclosable fastener assembly and said bottom seal.

55. The reclosable back-seam bag according to claim **51**, wherein said frangible access portion includes at least one or more score lines.

56. A reclosable bag, comprising:

a bag body having a top seal and a bottom seal, and a front wall and a back wall, the front wall being joined to the back wall at the top seal and the bottom seal,

the back wall being formed from a rectangular sheet of film folded along two longitudinal folds, and having overlapped and sealed edges of the rectangular sheet to form said side seam, said rectangular sheet having an inside surface, and said back wall having two sides, each side being defined between said side seam and a respective one of said longitudinal folds;

a reclosable fastener including two ends, a first continuous elongated profile strip and a second continuous elongated profile strip, said first continuous elongated profile strip being releasably connected to said second continuous elongated profile strip,

said first continuous elongated profile strip having a front wall connecting flange and at least one gripping flange, both said front wall connecting flange and said gripping flange having a width greater than a width of said first continuous elongated profile strip,

said second continuous elongated profile strip having a back wall connecting flange, said back wall connecting flange having a width greater than a width of said second continuous elongated profile strip,

the length of said reclosable fastener being less than the combined lengths of said two sides that form said back panel;

said front wall connecting flange being connected to said inside surface of said rectangular sheet and said front wall of said bag body at a front wall seal, said front wall seal being substantially parallel to said top seal and spaced between said bottom seal and said profile strips,

said back wall connecting flange being connected to said inside surface of said rectangular sheet and said back

wall at a back wall connecting seal, said back wall connecting seal being spaced between said profile strips and said top seal;

a side seal at each end of said reclosable fastener, each said side seal connecting an end of said reclosable fastener to the inside surface of said rectangular sheet of film inwardly of said longitudinal folds of said bag body thereby preventing air or liquids from entering or leaving said bag through said ends of said reclosable fastener, and each said side seal being provided to said reclosable fastener prior to attachment of said reclosable fastener to said front wall and said back wall, without said side seal being sealed again to connect the ends of said reclosable fastener to said inside surface of said front wall and an inside surface of said back wall; and

a frangible access portion substantially parallel to said reclosable fastener for exposing said releasable fastener, said frangible access portion being disposed on said front wall and on said back wall of said bag body adjacent said reclosable fastener and above said back wall connecting seal.

57. The reclosable bag according to claim **56**, wherein said side seam is configured with at least two separate webs of film around the periphery or sides of said bag body.

58. A reclosable bag, comprising:

a bag body having a top seal and a bottom seal, and a front wall and a back wall, the front wall being joined to the back wall at the top seal and the bottom seal,

the back wall being formed from one web of film folded along a longitudinal fold to form two half webs of film, and having top edges of each of the two half webs of film sealed together to form a side seam, and said back wall having two sides, each side being defined between said side seam and a respective one of said longitudinal folds;

a reclosable fastener including two ends, a first continuous elongated profile strip and a second continuous elongated profile strip, said first continuous elongated profile strip being releasably connected to said second continuous elongated profile strip,

said first continuous elongated profile strip having a front wall connecting flange and at least one gripping flange, both said front wall connecting flange and said gripping flange having a width greater than a width of said first continuous elongated profile strip,

said second continuous elongated profile strip having a back wall connecting flange, said back wall connecting flange having a width greater than a width of said second continuous elongated profile strip,

the length of said reclosable fastener being less than the combined lengths of said two sides that form said back panel;

said front wall connecting flange being connected to said inside surface of said one web of film and said front wall of said bag body at a front wall seal, said front wall seal being substantially parallel to said top seal and spaced between said bottom seal and said profile strips,

said back wall connecting flange being connected to said inside surface of said one web of film and said back wall at a back wall connecting seal, said back wall connecting seal being spaced between said profile strips and said top seal;

a side seal at each end of said reclosable fastener, each said side seal connecting an end of said reclosable fastener to the inside surface of said one web of film inwardly of said longitudinal folds of said bag body thereby preventing air or liquids from entering or leaving said bag through said ends of said reclosable fastener, and each said side seal being provided to said reclosable fastener prior to attachment of said reclosable fastener to said front wall and said back wall, without said side seal being sealed again to connect the ends of said reclosable fastener to said inside surface of said front wall and an inside surface of said back wall; and

a frangible access portion substantially parallel to said reclosable fastener for exposing said releasable fastener, said frangible access portion being disposed on said front wall and on said back wall of said bag body adjacent said reclosable fastener and above said back wall connecting seal.

59. A reclosable bag, comprising:

a bag body having a top seal and a bottom seal, and a front wall and a back wall, the front wall being joined to the back wall at the top seal and the bottom seal,

the back wall being formed from two webs of film that are sealed together along respective edges of the two webs of film to form four side seams, each of said two webs of film having an inside surface, and said back wall having two sides, each side being defined between each of said four side seams and a respective one of said two webs of film;

a reclosable fastener including two ends, a first continuous elongated profile strip and a second continuous elongated profile strip, said first continuous elongated profile strip being releasably connected to said second continuous elongated profile strip,

said first continuous elongated profile strip having a front wall connecting flange and at least one gripping flange, both said front wall connecting flange and said gripping flange having a width greater than a width of said first continuous elongated profile strip,

said second continuous elongated profile strip having a back wall connecting flange, said back wall connecting flange having a width greater than a width of said second continuous elongated profile strip,

the length of said reclosable fastener being less than the combined lengths of said two sides that form said back panel;

said front wall connecting flange being connected to said inside surface of each of said two webs of film and said front wall of said bag body at a front wall seal, said front wall seal being substantially parallel to said top seal and spaced between said bottom seal and said profile strips,

said back wall connecting flange being connected to said inside surface of each of said two webs of film and said back wall at a back wall connecting seal, said back wall connecting seal being spaced between said profile strips and said top seal;

a side seal at each end of said reclosable fastener, each said side seal connecting an end of said reclosable fastener to the inside surface of each of said two webs of film inwardly of said bag body thereby preventing air or liquids from entering or leaving said bag through said ends of said reclosable fastener, and each said side seal being provided to said reclosable fastener prior to attachment of said reclosable fastener to said front wall and

said back wall, without said side seal being sealed again to connect the ends of said reclosable fastener to said inside surface of said front wall and an inside surface of said back wall; and

a frangible access portion substantially parallel to said reclosable fastener for exposing said releasable fastener, said frangible access portion being disposed on said front wall and on said back wall of said bag body adjacent said reclosable fastener and above said back wall connecting seal.

* * * * *