Feb. 13, 1934. E. W. BEBIE 1,947,032

EXTENSION CORE CAP

Filed Dec. 10, 1931

Fig. 1.

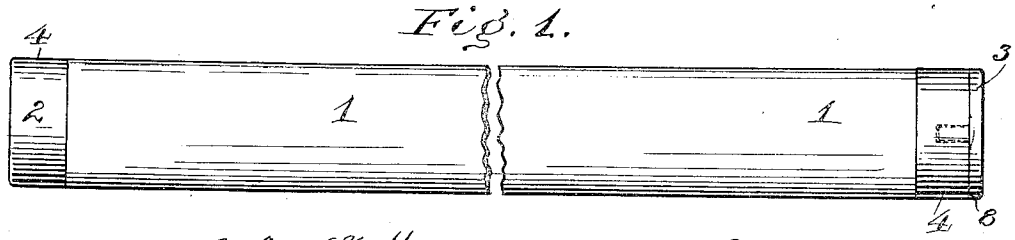

Fig. 2.

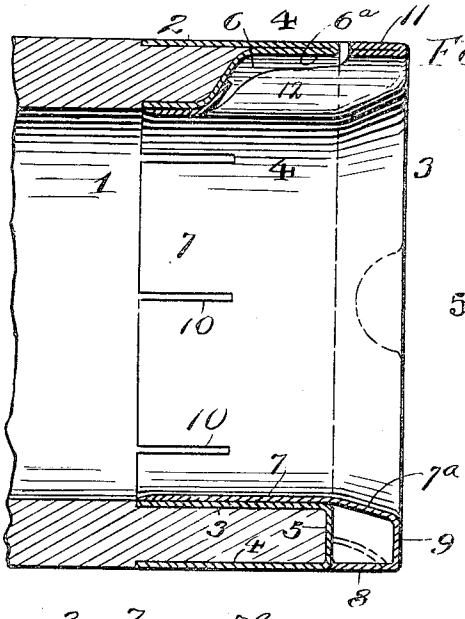

Fig. 3.

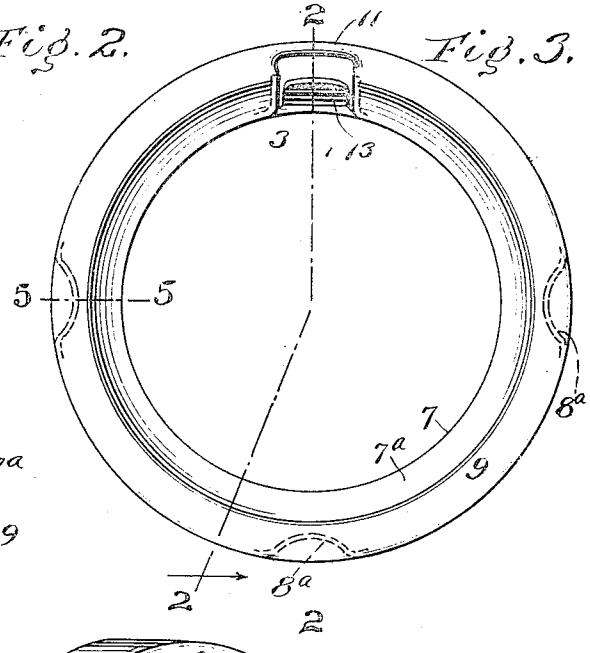

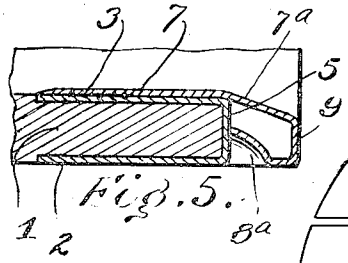

Fig. 5.

Fig. 4.

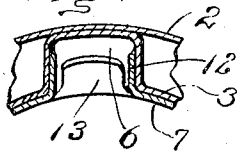

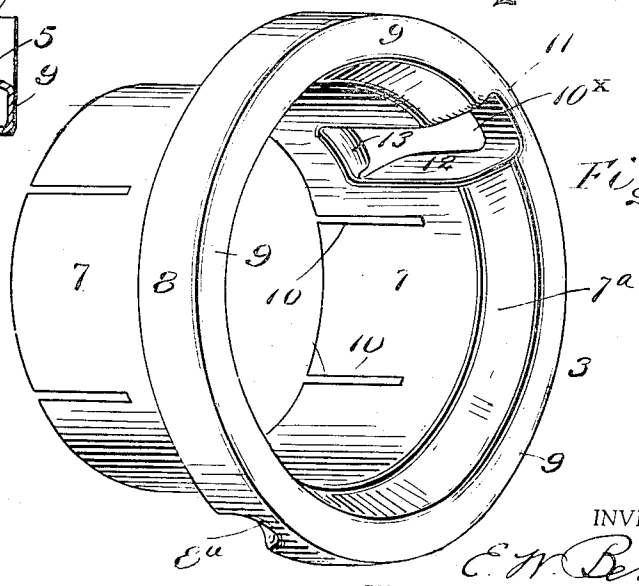

Fig. 6.

INVENTOR.

E. W. Bebie

BY

Morrison, Kennedy & Campbell

ATTORNEYS.

Patented Feb. 13, 1934

1,947,032

UNITED STATES PATENT OFFICE

1,947,032

EXTENSION CORE CAP

Edwin W. Bebie, Hawthorne, N. J., assignor to International Paper Company, New York, N. Y., a corporation of New York

Application December 10, 1931
Serial No. 580,069

8 Claims. (Cl. 242—68)

This invention relates to core caps for the cores upon which paper produced in continuous sheets on paper making machines is wound into rolls for mounting in printing presses. Cores for this purpose are commonly made into tubular form from paper, strawboard, paper pulp or similar material, and for the purpose of protecting the ends of the cores and adapting them to be mounted in the printing press and the paper unwound therefrom, it is customary to apply metal core caps to the ends of the cores. These core caps are usually formed, as by the provision of a notch or cavity therein, for the engagement of a stud on a supporting chuck or spindle of the printing press, by means of which the rotation of the roll is controlled for giving the paper sheet the proper tension as it is unwound from the roll and fed through the press.

Such cores are made of different lengths to accommodate sheets of different widths, and in practice it is found that after the cores have been cut to a size, which after the caps are applied will give an overall length to adapt the core for the desired width of paper sheet, the core structure will shorten up or shrink and will consequently be no longer suitable for receiving a paper sheet of such width.

To meet these conditions, I have in my Patent No. 1,802,694, issued October 6th, 1930, provided an extension core cap, which in the event of the shrinkage of the core structure, is applied to one or both of the main caps so as to form an extension thereof and thereby increase the over-all length of the core structure, thus restoring the original length of the core structure and avoiding the necessity of removing the main core caps and cutting down the cores for a sheet of lesser width.

The present invention is an improvement on said patented construction and has in view certain advantages in construction and results, which will be pointed out in the specification to follow, and the novel features of which will be set forth in the appended claims.

In the accompanying drawing:

Fig. 1 is a side elevation of a capped core, to one end of which my improved extension core cap is applied;

Fig. 2 is a longitudinal section on an enlarged scale through one end of the same on the line 2—2 of Fig. 3;

Fig. 3 is an end elevation of the same;

Fig. 4 is a cross section on the line 4—4 of Fig. 2;

Fig. 5 is a fragmentary longitudinal section on the line 5—5 of Fig. 3; and

Fig. 6 is a perspective view of the improved extension cap removed.

Referring to the drawing:

The core 1 is shown with main caps 2 applied to the ends thereof, to one of which the improved extension cap 3 is fitted.

The core 1 in the present instance is hollow, and the core caps 2 in the form shown by way of example to illustrate the present invention, comprise each inner and outer annular flanges 3 and 4, and an annular web 5 connecting said flanges, the said flanges of the cap extending with a snug fit at the inner and outer sides of the core at its end, and the connecting web abutting against the end of the core, as best shown in Fig. 2, where it will be seen that the inner flange at one point in its circumference is bent outwardly toward the outer flange to form a stud receiving cavity 6 to adapt the core, with the paper roll wound thereon, to be mounted and operated in a printing press.

It will be noted that the external surface of the outer flange 4 of the cap extends flush with the external surface of the core, so that the capped core structure will present on its outer side a smooth unobstructed external surface, free from projections such as might cause an unevenness in the layers of the paper coils, or interference with the proper and uniform winding of the paper upon the capped core.

The above described core cap is but one example of the same in connection with which my invention may be employed, and it is obvious that other forms and constructions of core caps may be used, since my invention is not concerned with the main core caps, but has to do with the extension core caps to be applied to the main core caps, in order to make up for the shrinkage of the core structure after the main core caps have been applied.

For use in connection with the form of main core cap shown, the improved extension core cap consists, as best shown in Figs. 2 to 6, of a relatively long inner flange or collar 7, a shorter outer parallel flange 8, and an annular web 9 connected to the outer ends of said flanges. The inner flange is of a diameter which will fit with a drive fit within the inner flange 3 of the main core cap, and to facilitate the insertion of the flange 7 within the flange 3, the former may be provided with a series of longitudinal slots 10 to give same some degree of resiliency or spring,

although this construction is not absolutely necessary, and said slots may be entirely omitted.

The outer flange 8 of the extension core cap is of a diameter to abut at its inner edge against the outer end of the web 5 of the main cap at its outer peripheral edge, in such relation thereto that the external surface of the flange 8 will extend flush with the outer surface of the flange 4 of the main cap, thereby leaving no projections or obstructions to interfere with the winding and proper coiling of the paper, and presenting with the outer surface of the main cap and core body, a continuous uninterrupted smooth cylindrical surface.

At one point in its circumference, which when the extension cap is fitted in place will be in alinement with the stud receiving cavity 6 in the main cap, the inner flange 7 of the extension cap is cut out to form an opening or hole 10^x, and this inner flange 7 is at the upper end of this opening bent outwardly and flatly closely against the outer flange 8, as at 11, while the side edges of the opening are bent outwardly forming parallel longitudinally extending flanges or walls 12, which when the extension cap is driven in place on the main cap, will fit within the stud receiving cavity 6 of the main cap, closely against the sides of said cavity. At the bottom of the hole 10^x in the extension cap, the metal of the inner flange 7 is bent outwardly in the form of a lip 13, which when the extension cap is driven to its seat on the main cap, will overlie the inner end of the stud receiving cavity 6 of the main cap, all as best shown in Figs. 2 and 4.

By reason of the engagement of the flanges 12 of the extension core cap in the stud receiving cavity of the main cap, the extension core cap is interlocked with the main cap in such manner that relative circumferential movement of the same is effectually prevented, thereby insuring an effective connection of the two and avoiding displacement, such as would interfere with the engagement of the controlling stud in the printing press with the parts.

Due to the above described construction and relation of the parts of the main cap and extension cap, the full depth of the stud receiving cavity 6 of the main cap is left exposed and made available for receiving the stud of the spindle or chuck of the printing press, the inner face of the outwardly bent portion 11 of the flange of the extension cap being flush with the bottom 6^a of the stud receiving cavity 6, so that there will be nothing to interfere with the accurate fit of the stud on the printing press in the cavity 6 in controlling the operation of the core.

It will be understood that the depth or length of the outer flange 8 of the extension cap (since in the seating of the extension cap on the main cap the position of the extension cap is determined by the engagement of the inner edge of the flange 8 with the web of the main cap) will determine the degree of added length to the original capped core. Hence the outer flanges of the extension caps will be made of different lengths or depths according to the conditions to be met in practice as regards the amount of shrinkage of the core structure, the width of paper sheets dealt with, etc.

It will be observed on reference to Figs. 2, 3, 5 and 6, that the inner flange 7 of the extension cap is at its outer end, where it is connected with the annular web 8, tapered or flared outwardly as at 7^a, in order that there will be sufficient clearance for the entrance of the tapered spindle of the printing press to seat the stud of said spindle fully in the notch 6 of the main cap, and therefore no obstruction is offered to the entry of this spindle, such as would be presented if the flange 7 extended parallel with the outer flange 8 throughout its extent.

The outer flange 8, while as before stated seats at its inner end against the outer edge of the web 5 of the main cap, is bent inwardly at a number of points as at 8^a, in order to afford feet or surfaces for abutting against the main cap in the event that in the conditions of use the flange 8 is sprung or spread outwardly beyond the edge of the main cap.

From the foregoing description it will be realized that an extension cap is produced of very simple and rugged construction, and of a form which may be applied with ease and facility to the main core caps of paper roll cores, and when so applied will be retained in position without danger of displacement or escape; and that the external surface of the extension cap forms a continuation of the external surface of the main cap and that of the core, thereby avoiding the presence of any projections or obstructions where the said flanges meet, which would interfere with the proper winding of the paper sheet on the core structure and the proper and smooth disposition of the convolutions of the paper thereon. In other words, the external surfaces of the core, the main caps, and the extension caps present one continuous uninterrupted cylindrical surface best suited for the proper winding of the paper sheet thereon.

While in the foregoing description and accompanying drawing the invention has been set forth in the particular details which it is preferred to adopt and which in practice have been found to answer to a satisfactory degree the ends to be attained, it will be understood that these details may be variously changed and modified without departing from the spirit of the invention; and further, it will be understood that the invention is not limited to any particular form or construction of the parts, except insofar as such limitations are specified in the claims.

Having thus described my invention, what I claim is:—

1. In combination with a hollow core for paper rolls, a core cap applied to the end thereof for mounting and operation in a machine, and an annular extension core cap applied to the main cap to increase the overall length of the core structure, said extension cap being provided with an inner portion fitting frictionally within the main cap, and having an outer portion seated against the outer end of the main cap and extending flush with the outer surface of the main cap.

2. In combination with a core for paper rolls, a core cap applied to the end thereof to adapt the core for mounting and operation in a machine, said core cap having its external surface extending flush with the external surface of the core, and an extension cap applied to the main cap to increase the overall length of the core structure, and having its external surface extending flush with the external surface of the main cap.

3. In combination with a core for paper rolls, a core cap applied to the end thereof to adapt the core for mounting and operation in a machine, said core cap having at one point in its circumference a cavity, and an extension cap applied to the main cap to increase the overall length of the core structure, said extension cap being

formed with a projection to seat in said stud receiving cavity of the main cap and thereby interlock therewith.

4. In combination with a hollow core for paper rolls, a core cap applied to the end of the core and formed with flanges extending respectively at the inner and outer sides of the core and having a connecting web extending across the end of the core, and an extension core cap applied to said main core cap and provided with an inner flange adapted to extend within the inner flange of the main cap to hold the extension cap in position, and having an outer flange connected with the inner flange and adapted to abut at its inner end against the web of the main cap at its outer edge, said outer flange of the external cap constituting an obstructionless continuation of the outer surface of the core and main cap.

5. An extension core cap adapted for application to the main core cap of a hollow paper-roll core to increase the overall length of the core structure, said extension cap comprising an inner flange of a diameter to fit tightly within the main cap, and an outer flange adapted to seat against the outer end of the main cap at its outer edge, and to extend flush with the outer surface of the main cap.

6. An extension core cap adapted for application to the main core cap of a hollow paper-roll core wherein the main core cap is formed with a stud receiving cavity, said extension cap having an inner flange to fit tightly within the main core cap, and having a hole therethrough to admit of the engagement of an operating stud in the cavity of the main cap, said hole in the extension cap being provided at its sides with outwardly extending flanges to extend into the stud receiving cavity of the main cap.

7. In combination with a core for paper rolls, a core cap applied to the end thereof and formed with a stud receiving cavity at one side to adapt the core for operation in a machine, and an extension core cap applied to the main cap and having a hole formed in it at one side adapted to be disposed in alinement with said stud receiving cavity, and lips at the opposite edges of said hole, and extending into the stud receiving cavity of the main cap at the sides of said cavity.

8. In combination with a core for paper rolls, a main core cap applied to the end thereof and formed with a stud receiving cavity at one side to adapt the core for operation in a machine, an extension core cap applied to the main cap, and having formed in it at one side, an opening adapted to be disposed in alinement with the said stud cavity to expose the cavity for the engagement of a stud, outwardly extending flanges on the extension at the sides of the opening therein, and an outwardly extending lip on the extension cap at the bottom of the said opening, to extend into the bottom of the stud receiving cavity of the main cap.

EDWIN W. BEBIE