United States Patent [19]

Brayford

[11] **Patent Number: Des. 295,501**

[45] **Date of Patent: ** May 3, 1988**

[54] **TIME CLIP**

[76] Inventor: **Ernest E. Brayford,** 6880 Archibald Ave. #84, Alta Loma, Calif. 91701

[**] Term: **14 Years**

[21] Appl. No.: **660,796**

[22] Filed: **Oct. 15, 1984**

[52] **U.S. Cl.** **D10/31;** D10/15; D11/215

[58] **Field of Search** D10/1, 2, 30–39, D10/15, 122–126; D19/65; D2/407, 428–430; 368/10, 30, 45, 267–285; D11/215

[56] **References Cited**

U.S. PATENT DOCUMENTS

D. 256,402	8/1980	Okura et al.	D2/406
D. 258,996	4/1981	Costantino	D2/430
D. 276,313	11/1984	Matthias	D10/15

OTHER PUBLICATIONS

Harper's Bazaar, 6/1951, p. 15–money clip watch.
Hong Kong Enterprize, 12/1981, p. 282–ruler & paper-weights with digital clock display at center left.

Primary Examiner—Louis S. Zarfas

[57] **CLAIM**

The ornamental design for a time clip, as shown and described.

DESCRIPTION

FIG. **1** is a perspective view of a time clip showing my new design; and,
FIG. **2** is an edge elevational view thereof.
The opposite edge is a mirror image and the bottom is plain.

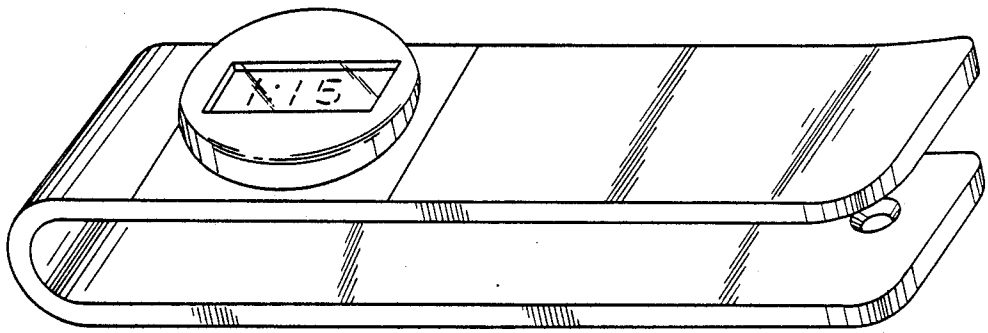

FIG.1

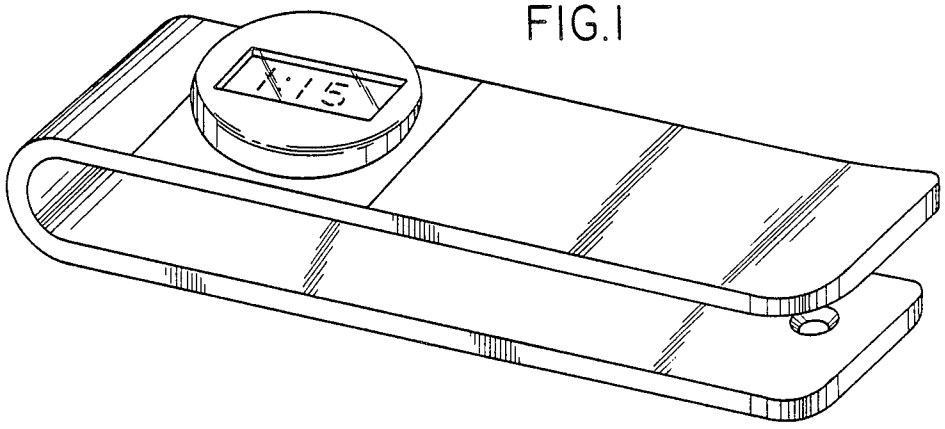

FIG.2

