J. T. NEEDHAM.

PNEUMATIC DESPATCH TUBE APPARATUS.

APPLICATION FILED FEB. 21, 1908.

1,134,402.

Patented Apr. 6, 1915.

3 SHEETS—SHEET 1.

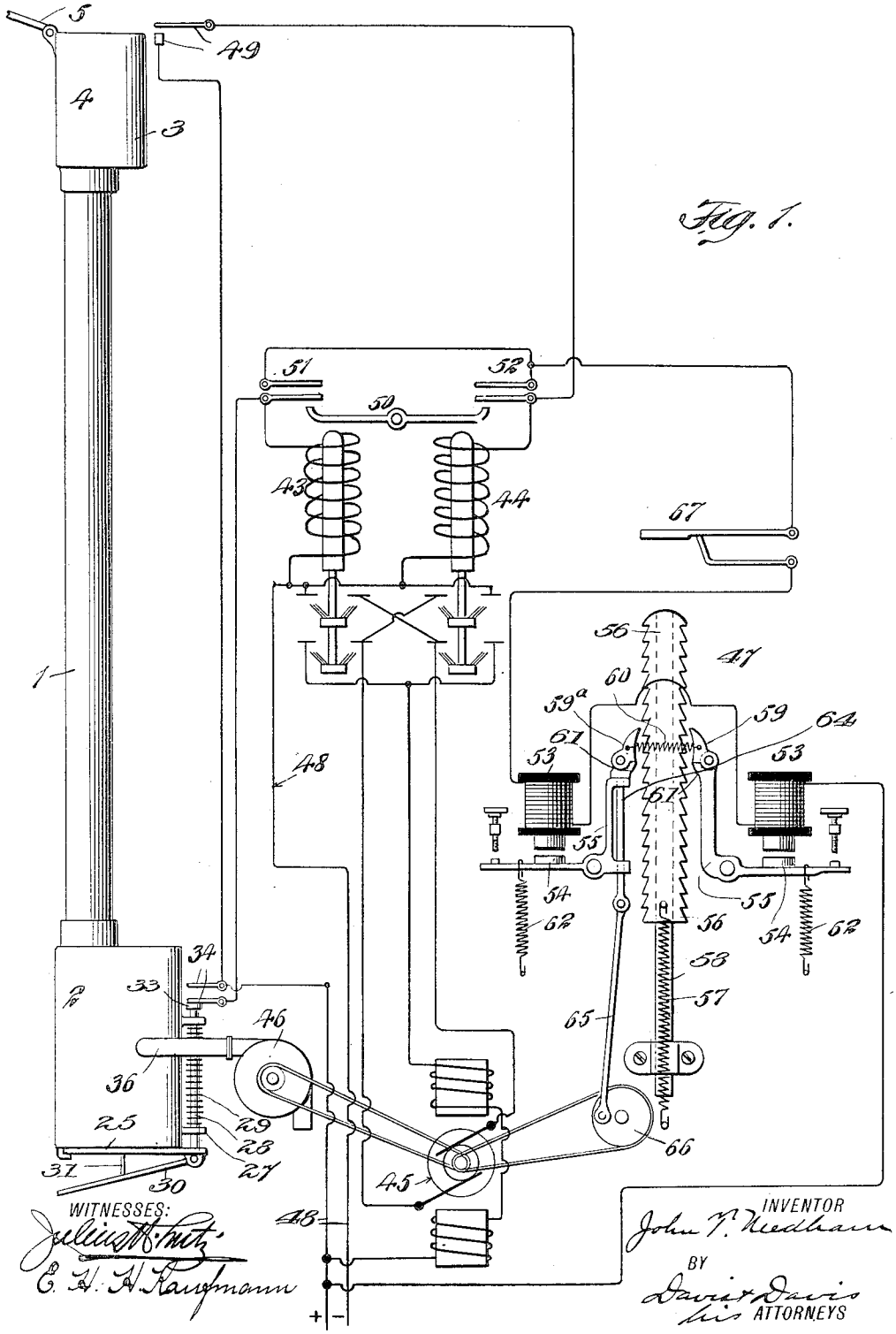

Fig. 1.

THE NORRIS PETERS CO., PHOTO-LITHO., WASHINGTON, D. C.

J. T. NEEDHAM.

PNEUMATIC DESPATCH TUBE APPARATUS.

APPLICATION FILED FEB. 21, 1908.

1,134,402.

Patented Apr. 6, 1915.

3 SHEETS—SHEET 2.

Fig. 2.

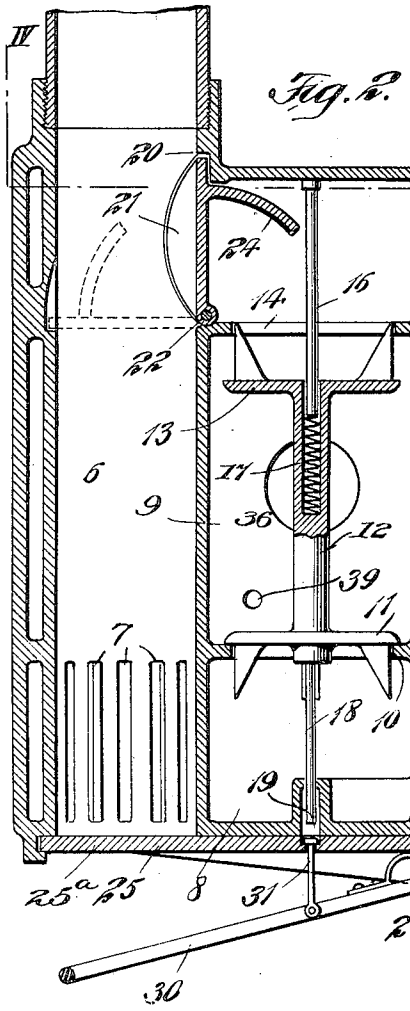

Fig. 3.

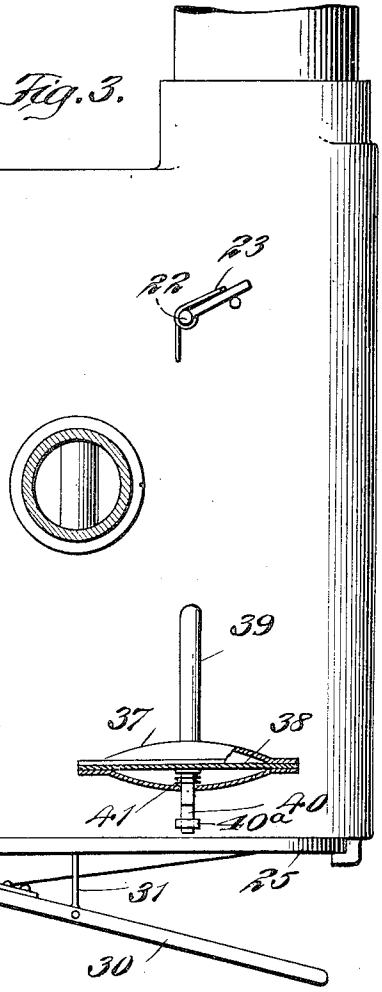

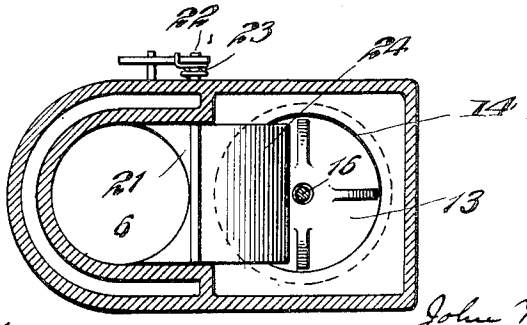

Fig. 4.

WITNESSES

Juliet H. Smith

E. H. H. Kaufmann

INVENTOR

John T. Needham

BY

Davis & Davis

his ATTORNEYS

THE NORRIS PETERS CO. PHOTO-LITHO. WASHINGTON, D.

J. T. NEEDHAM.

PNEUMATIC DESPATCH TUBE APPARATUS.

APPLICATION FILED FEB. 21, 1908.

1,134,402. Patented Apr. 6, 1915.

3 SHEETS—SHEET 3.

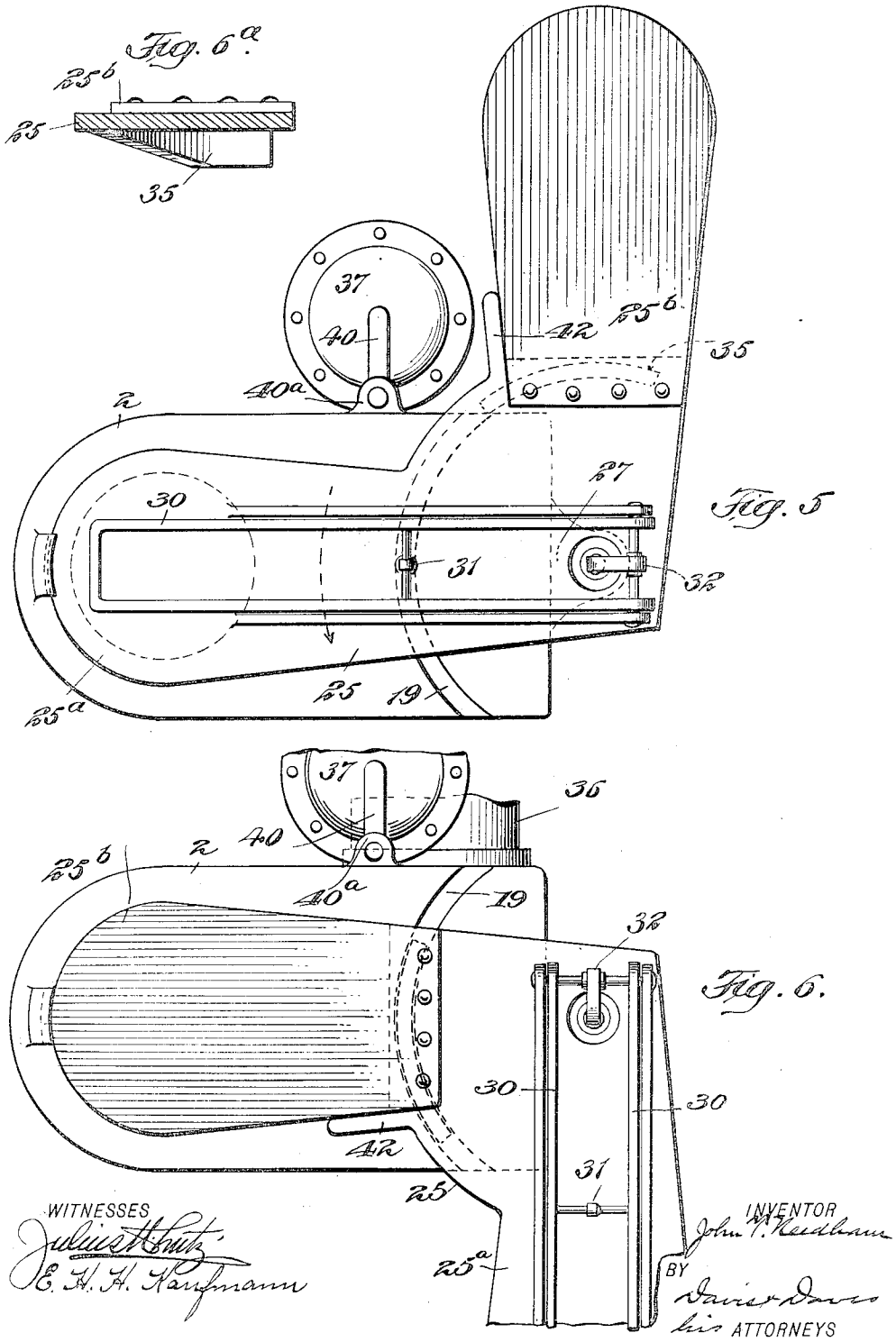

WITNESSES

Julius H. Lutz

E. H. H. Kaufmann

INVENTOR

John T. Needham

BY

Davis & Davis

his ATTORNEYS

UNITED STATES PATENT OFFICE.

JOHN T. NEEDHAM, OF NEW YORK, N. Y., ASSIGNOR, BY MESNE ASSIGNMENTS, TO THE LAMSON COMPANY, OF NEWARK, NEW JERSEY, A CORPORATION OF NEW JERSEY.

PNEUMATIC-DESPATCH-TUBE APPARATUS.

1,134,402. Specification of Letters Patent. Patented Apr. 6, 1915.

Application filed February 21, 1908. Serial No. 416,954.

To all whom it may concern:

Be it known that I, JOHN T. NEEDHAM, a subject of the King of Great Britain, residing in the borough of Manhattan, city, county, and State of New York, have invented certain new and useful Improvements in Pneumatic-Despatch-Tube Apparatus, of which the following is a specification, reference being had therein to the accompanying drawings, in which—

Figure 1 is a diagrammatic view of the apparatus; Fig. 2 a longitudinal vertical sectional view of the terminal head; Fig. 3 a side elevation thereof, portion being shown in vertical section; Fig. 4 a horizontal sectional view on the line IV—IV of Fig. 2; Fig. 5 a bottom plan view of the terminal head showing the parts in the sending position; Fig. 6 a similar view showing the parts in their normal or receiving position; and Fig. 6ª a detail view of the cam for automatically opening the terminal valve.

This invention relates to improvements in pneumatic despatch tube systems wherein carriers are transmitted from one station or terminal to another through a tube under pressure or a vacuum.

One of the main objects of the invention is to provide a single tube system wherein carriers may be transmitted in either direction one after the other as rapidly as they can be inserted in the tube, the last carrier to be inserted controlling the air-moving means, whereby said movement of air through the tube will be interrupted after a predetermined time so that the transmission tube will be normally dead with no pressure or vacuum thereon.

Another object of the invention is to provide an improved terminal having a single carrier-receiving chamber through which air may be driven into the tube for the transmission of carriers, and to provide means whereby carriers may be inserted in said single receiving chamber, one after the other, as rapidly as may be desired without permitting air to escape through said receiving chamber.

It is also one of the main objects of this invention to provide such a terminal which will serve as a receiving terminal when the transmission tube is under pressure and as a discharge terminal when said tube is under a vacuum, or the air is being exhausted therefrom.

A further object of the invention is to provide a suitable timing means adapted to be set in operation at or near the terminals whereby the air-moving means will be permitted to operate a predetermined time and will then be stopped.

Other important objects and advantages of the invention will appear hereinafter, and I do not wish to be understood as stating that the foregoing objects of the invention are the only ones sought to be accomplished by my invention.

Referring to the various parts by numerals, 1 designates the transmission tube and 2 the main terminal which controls the air supply and serves as a receiving terminal when working under pressure in the transmission tube, and as a discharge terminal when working under a vacuum in the transmission tube, the exhaust being through said terminal. This terminal is preferably located at the home station. A subordinate terminal 3 is provided at the distant end of the line. This subordinate terminal serves as both a discharge and a receiving terminal and consists merely of a box or chamber 4 provided with a light, preferably perforated, hinged cover 5. This cover is arranged to close a circuit when said cover is closed for the purpose of controlling a motor circuit, as will be more fully hereinafter described. The cover is normally open and only closed momentarily as a carrier is transmitted, and it is perforated to permit air to pass into and out of the transmission tube. This cover may be dispensed with entirely and any means be provided by which the motor controlling circuit may be closed at the distant end of the line.

The main terminal is formed with a chamber 6 to receive the carrier, said chamber being provided at its lower or outer end with slots 7 which place said chamber in communication with an air chamber 8 surrounding chamber 6. The chamber 8 is in communication with a central air supply or valve chamber 9 through a port 10 which is controlled by valve 11. This valve is provided with an upwardly extending central stem 12 which carries at its upper end a valve 13 adapted to close a port 14 and to thereby control communication between the

air supply or valve chamber 9 and the outlet chamber 15. Secured to the upper wall of the chamber 15 and projecting into a central longitudinal recess in the valve stem 12 is a guide rod 16. Within the valve stem is arranged a spring 17 which is confined therein by the rod and normally holds the valve 11 seated to close the port 10. The stem 12 is of such length that when the valve 11 is seated, valve 13 is moved away from the port 14, thereby opening communication between its supply chamber 9 and the outlet. chamber 15. Connected to the valve 11 is a central depending valve rod 18 whose lower end projects into a curved slot or recess 19 formed in the under side of the terminal head. An opening 20 places outlet chamber 15 in communication with the upper or inner end of the receiving chamber 6; and to close this opening a valve 21 is provided. This valve is pivoted at its lower edge, as at 22, its outer surface conforming to the interior cylindrical surface of the chamber 6. The pivot of this valve is extended to the outer side of the terminal head and secured thereon is a spring 23 which normally holds the valve in its closed position. The valve 21 is circular in order that when it is swung down across the chamber 6 as shown in dotted lines in Fig. 2, it will prevent air passing through the lower or outer end of said chamber. On the inner side of this valve is formed a curved wing 24 which is adapted to be engaged by the air passing through port 14 to swing said valve outward across chamber 6, as will be more fully hereinafter set forth.

On the bottom of the main terminal 2 is pivoted a horizontally movable cover or gate 25, said cover being provided with an upwardly extending journal 26 which is mounted in a lug 27 formed on the side of the terminal. The cover is formed with a rigid portion 25^a, which is preferably formed of metal, and with a flexible portion 25^b, this flexible portion being preferably formed of leather and being connected at its inner edge to the rigid portion of the cover. These two portions of the cover are at right angles to each other so that it will require a quarter turn of the cover on its pivot to remove the rigid portion of the cover from the end of the chamber 6 and to bring the flexible portion thereof in position to close said chamber. The journal 26 is connected to a pivot rod 28 and turns with the same. Connected to the pivot rod at one end is a coil spring 29, the other end of said spring being connected to a rigid part of the head; and said spring is so tensioned that it normally holds the cover in such a position that the flexible portion 25^b thereof extends over the lower end of the chamber 6 and closes the same.

Mounted on the rigid portion of the cover near the cover pivot is a valve operating lever 30 which carries a push pin 31, said pin extending through the cover directly in line with the valve rod 18 when said rigid portion is over the chamber 6. This lever is normally held downward and away from the cover, as shown in Fig. 2. The push rod is adapted to engage the valve rod to open the valve 11 when the lever is moved upward, and the rigid part 25^a of the cover is in position to close the lower end of the receiving chamber. Carried by the lever at its pivot is a cam 32 which is adapted to bear on the lower end of a contact rod 33. This rod extends upward through the pivot rod 28, its upper end being in position to engage one of a pair of contacts 34 to bring said contacts together and to thereby close a motor controlling circuit, as will be more fully hereinafter described.

On the upper side of the rigid part of the cover, that is to say, on the side in contact with the lower surface of the head or terminal and adjacent the inner edge of the flexible part of the cover, is formed a cam 35 which is curved to conform to the curve of the slot 19, said slot and said cam being on an arc struck from the center of the pivot of the cover. This cam is adapted to engage the lower end of the valve rod 18 and to force the same upward to open the valve 11 and close the valve 13 so that when the flexible part of the cover closes the lower end of chamber 6, valve 13 will be seated, valve 11 will be open, and valve 21 will be closed by its spring 23. The parts assume this position when air is being exhausted from the transmission tube through the slot 7 of chamber 6 and through chambers 8 and 9.

The air supply pipe is connected to the supply chamber 9. To this pipe is connected the air-moving means by which air may be either forced into the supply chamber or exhausted therefrom.

The operation of the main terminal is as follows:—To transmit a carrier it is placed in the chamber 6 and the cover 25 is turned on its pivot to bring the rigid portion 25^a thereof over the lower end of said chamber. The lever 30 is then moved upward to the cover, pin 31 engaging the valve rod 18 and thereby unseating valve 11 and seating valve 13. Cam 32 forces upward the rod 33 and closes the motor controlling circuit through the contacts 34. This starts the motor in the proper direction to drive air into the supply chamber 9. From said chamber the air passes through chamber 8 and slots 7 into the chamber 6 to propel the carrier through the transmission tube. When the lever 30 is lowered pin 31 is withdrawn and spring 17 forces valve 11 to its seat thereby closing communication between the supply chamber and the chamber 8 and opening communication between the supply chamber and outlet cham-

ber 15. The air rushing into chamber 15 will swing the valve 21 on its pivot across the chamber 6. The curved wing 24 is provided so that the air will force the valve 21 to its seat across the chamber 6, and hold it in that position until the flow of air into the chamber 15 is interrupted.

As soon as the lever 30 is released spring 29 rotates the valve on its pivot in the direction indicated by the arrow in Fig. 5 to swing the rigid portion of the cover away from the chamber 8 and to bring the flexible portion thereof under said chamber. It is necessary to interrupt this swinging movement of the cover and to hold it in its midway position, or a substantially midway position, until the flow of air into the supply chamber 9 is interrupted. To accomplish this I provide a diaphragm chamber 37 in which is mounted a diaphragm 38. The chamber 37 is in communication with the supply chamber 9 through a pipe 39. Carried by the diaphragm is a depending stop pin 40, a spring 41 being provided to hold the diaphragm and the stop pin in their normal positions. When the pin is in its normal position its lower end does not interfere with the swinging movement of the cover 25, but when the pressure is in chamber 9 the diaphragm is extended and the pin 40 projected below the head sufficiently to interrupt the swinging movement of the cover and to hold it in a position substantially midway the length of its movement. The cover is provided with a lug 42 which is adapted to engage the pin 40. When the cover is in its midway position and lug 42 is in engagement with the pin 40, the rigid part 25^a of the cover will be removed from the lower end of the chamber 6, so that carriers may be inserted in said chamber.

It is necessary to stop the cover as described when air pressure is in chamber 9 in order to prevent the cam 35 from engaging valve rod 18 and opening valve 11. When the movement of air into the chamber 9 is interrupted the diaphragm 38 and pin 40 will be returned to their normal positions by the spring 41 and cover 25 will then be swung by the spring 29 to its normal position to bring the flexible leather part 25^b over the lower end of the chamber 6. During this movement of the cover the cam 35 will engage the valve rod 18 and raise valve 11 from its seat, and seat valve 13. In this position the terminal is in condition to serve as an exhaust head and discharging terminal. It will be readilv seen that if air be exhausted through pipe 36 it will be drawn from the transmission tube through slots 7, chamber 8, port 10 and supply chamber 9. It is also manifest that a carrier traveling from the distant end of the line under the action of said exhaust will kick off the flexible cover and be discharged.

By providing the main terminal constructed as described the receiving chamber may be opened to receive a second carrier immediately upon the sending of the first carrier, that is to say, as soon as the valve 21 has been closed by the air rushing through outlet chamber 15. It is also manifest when the second carrier is placed in chamber 6 to be transmitted valve 11 will be opened and valve 13 will be closed by the operation of lever 30 and push pin 31, and that thereupon the carrier will be forced through the chamber 6 into the transmission tube, opening valve 21 in its passage. It is manifest that many carriers may be transmitted in this way without the loss of air; and except for the manual manipulation of the cover and the lever 30 the operation of the apparatus is automatic.

It will, of course, be understood that any suitable means may be employed to interrupt the swinging movement of the cover to prevent the cam 35 engaging the valve rod 18 when air is under pressure in the supply chamber 9. The diaphragm means is one way of accomplishing this result and it has some advantage over a mechanical means in that it is controlled directly by the air pressure in the supply chamber.

The motor controlling apparatus consists of two solenoid motor-starting devices 43 and 44, an electric motor 45, a blower 46 driven thereby, and a timing device 47. The solenoid 43 is in circuit with the contacts 34 of the main terminal and the supply mains 48. The motor is electrically connected to the contacts of the solenoid 43 and with the mains so that when the circuit is completed through the said solenoid the motor will be started and the blower operated to force air into the head 2 thereby causing a pressure in the supply chamber 9.

The solenoid 44 is in circuit with the contacts 49 which are adapted to be brought together by the cover 5 of the terminal at the distant end of the line. The contacts of the solenoid 44 are in circuit with the motor in such manner that the motor will be reversed and the blower driven to exhaust air from the transmission tube so that carriers may be transmitted from the terminal 4 to the main terminal 2.

Above the solenoids is mounted a rocking lever 50 whose arms extend over the cores of the solenoid. Above each end of said rocking lever is arranged contacts 51 and 52, said contacts being adapted to be brought together by the lever 50 when one end thereof is raised by the adjacent solenoid core. This bar is so arranged that when one end is raised by the core of one solenoid the other end will be depressed and will prevent the core of the other solenoid being raised. Because of this it will be impossible to complete the motor circuit from the idle terminal. It

is manifest that a device of this kind is necessary to prevent a reversal of the motor when a carrier is passing through the tube.

Any suitable form of timing device may be employed to open the motor circuit and to bring the apparatus to rest. The form shown is simple and has many advantages. It is mechanically operated and is controlled directly by the motor. It consists of two electromagnets 53 both of which are in circuit with the contacts 51 and 52 so that both will be energized when the circuit is completed through either of said pairs of contacts. Each of said magnets is provided with an armature 54 carried by a pivoted angle lever 55. Between the angle levers a reciprocating controller bar 56 is mounted, said bar having ratchet teeth on its edges and being mounted to slide on a rectangular rod 57 and yieldingly held in its normal position by a spring 58. One arm of each of the levers 55 is arranged parallel with the longitudinal edges of the controller bar and said arms carry at their outer free ends pivoted dogs 59 and 59[a] which are adapted to engage the toothed edges of the bar 56. These dogs are connected together by a light spring 60 so that they yieldingly engage the ratchet bar; they are provided with stops 61 to limit their movement under the action of the spring 60 and to hold the bar against a return movement under the influence of the spring 58 until the dogs are released from said bar. A spring 62 is connected to each of the angle levers to normally hold the armatures away from the electromagnets and adjusting screws 63 are provided to adjust the angle levers with respect to the said magnets.

The dog 59[a] carried by one angle lever is mounted on the end of a reciprocable bar 64 which is mounted in suitable bearings on the angle lever and is parallel with the adjoining toothed edge of the ratchet bar. A pitman 65 is connected to the reciprocable bar and to a suitable driving mechanism 66 driven from the motor.

In circuit with the magnets 53 and the contact plates 51 and 52 is a pair of contacts 67 one of which constitutes a circuit controlling arm and is adapted to be engaged by the end of the controller bar. Said contacts are normally held together and are adapted to be separated by said bar.

The operation of the motor controlling apparatus is as follows:—When the contacts 34 are brought together by the movement of the lever 30 the circuit through the solenoid 43 is completed from the positive lead through the contacts 34, thence through the solenoid coil to the negative lead, thereby completing the motor circuit through the solenoid contacts. This latter circuit is completed from the positive lead through the field coil of the motor, thence through the lower solenoid contacts to the armature, and thence through the upper solenoid contacts to the negative lead. The motor is by this circuit rotated in the proper direction to force air into the transmission tube through pipe 36 to transmit carriers from the main terminal to the distant end of the tube. When the lever 50 has been moved by the solenoid core to close the circuit through contacts 51 the solenoid circuit will be completed from the positive lead through the magnets 53 of the timing mechanism and contacts 67 thereof, thence to contacts 51 and the solenoid and to the negative lead. Said circuit is now independent of the contacts 34 so that the lever 30 may be released and contacts 34 separated, and the solenoid circuit maintained until the motor circuit is broken by the motor circuit controlling means, or timing device. When the contacts 49 are brought together by means of the cover 5, or otherwise, current passes from the positive lead through contacts 49, through the coil of the solenoid 44 to the negative lead. When the contacts 52 are brought together through lever 50 and the core of the solenoid 44, the solenoid circuit will be completed from the positive lead through the magnets 53, contacts 67, contacts 52, the solenoid coil to the negative lead, thereby permitting the contact 49 to be separated without disrupting said circuit. The motor circuit is completed through the contacts of the solenoid 44 and flows from the positive lead through the field coils of the motor to the lower contacts of the solenoid, thence to the motor armature and back through the upper solenoid contacts to the negative lead. It will be noted that the current flows through the armature in a direction opposite to that in which it flows when the solenoid 43 is energized, thereby reversing the motor.

When the contacts 51 are brought together by the lever 50 current is sent from the positive lead through the magnets 53 contacts 67, contacts 51, solenoid coil 43 to the negative lead thereby swinging the levers 55 on their pivots and throwing the dogs 59 and 59[a] into engagement with the ratchet bar. The bar 64 carrying the dog 59[a] will be reciprocated by the motor, the movement of said bar being equal to the length of one ratchet tooth. It will be seen that by the reciprocation of the dog 59[a] the bar 56 will be gradually moved outward against the tension of the spring 58, and as it is moved outward it will be held by the opposite dog 59. This action will continue until the end of the bar 56 has engaged the controlling arm 67 and breaks the magnet and solenoid circuits. The motor circuit will then be broken by the dropping of the solenoid core, and the apparatus will be at rest. The same operation takes place when

the contacts 49 at the distant end of the line are brought together, the solenoid current being first completed through the contacts 49 and then through the contacts 52.

By properly placing the controller bar 56 with respect to the arm 67 the magnet and solenoid circuits may be opened the desired length of time after the starting of the motor.

When the magnet circuit is broken the springs 62 will withdraw the dogs 59 and 59a from the ratchet bar, and permit the spring 58 to return said bar to its normal position.

It will, of course, be understood that the timing means will be released and returned to its normal position each time a carrier is placed in a terminal. This is accomplished by shunting the circuit through the magnets 53, thereby permitting the armatures 54 to be moved by the springs 62 to release the dogs from the controller bar. When said bar is released its spring 58 returns it to its normal position. This shunting of the magnet circuit occurs when the terminal contacts 34 or 49 are brought together. It will readily be seen that when either of said pairs of contacts are in engagement, the current will pass directly through the solenoid coil and back to the main supply wires without passing through the magnets. Of course, as soon as the terminal contacts are separated the current again passes through the magnets 53 and the timing means will be again set in operation. It will, therefore, be seen that the timing means will be returned to its normal position each time the contacts at either of the terminals are brought into engagement. By this means carriers may be inserted one after the other in a terminal and the last carrier to be inserted will control the length of time the motor will be operated.

It will be understood that when the motor circuit is completed through the solenoid 44, the motor is reversed to cause it to draw air through the transmission tube. This will be understood from the arrangement of the circuits shown in Fig. 1.

Having thus described my invention, what I claim as new and desire to secure by Letters Patent, is:—

1. A pneumatic despatch tube apparatus comprising a transmission tube, an electric motor, means whereby the motor will move air through the tube, a pair of solenoids to complete the circuit through said motor, means at one end of the transmission tube to complete the circuit through one of said solenoids to drive the motor in one direction, means at the other end of the tube to complete the circuit through the other solenoid to drive the motor in the reverse direction, and means operated by one solenoid when the circuit is completed therethrough to prevent the movement of the core of the other solenoid.

2. A pneumatic despatch tube apparatus comprising a transmission tube, an electric motor, means whereby the motor will move air through the tube, a pair of solenoids to complete the circuit through said motor, means at one end of the transmission tube to complete the circuit through one of said solenoids to drive the motor in one direction, means at the other end of the tube to complete the circuit through the other solenoid to drive the motor in the reverse direction, and means adapted to be operated by either solenoid when the circuit is completed therethrough to prevent the movement of the core of the other solenoid.

3. A pneumatic despatch tube apparatus comprising a transmission tube, an electric motor, means whereby the motor will move air through the tube, a pair of solenoids to complete the circuit through said motor, means at one end of the transmission tube to complete the circuit through one of said solenoids to drive the motor in one direction, means at the other end of the tube to complete the circuit through the other solenoid to drive the motor in the reverse direction, and a movable bar adapted to be operated by either solenoid when the circuit is completed therethrough to prevent the movement of the core of the other solenoid.

4. A pneumatic despatch tube apparatus comprising a transmission tube, an electric motor, means whereby the motor will move air through the tube, two solenoids adapted to independently complete the motor circuit, means at one end of the tube to complete the circuit through one solenoid, means at the other end of the tube to complete the circuit through the other solenoid, an electrically controlled timing means, and means operated by the solenoids to complete the circuit through said timing means and through the solenoid in use independently of the circuit making means at the ends of the tube.

5. A pneumatic despatch tube apparatus comprising a transmission tube, an electric motor, means whereby the motor will drive air through the tube, a solenoid to complete the motor circuit, means at one terminal of the transmission tube to complete the solenoid circuit, mechanical means operated by the solenoid core to complete the solenoid circuit independently of the means at the terminal, and means operated by the motor to break the solenoid circuit after a predetermined time.

6. A pneumatic despatch tube apparatus comprising a transmission tube, an electric motor, means whereby the motor will move air through the tube, a solenoid to complete the motor circuit, means at a terminal of the transmission tube to complete the solenoid circuit, mechanical means operated by the

solenoid to complete the solenoid circuit independently of the means at the terminal, and means to open the solenoid circuit a predetermined time after the completion of the motor circuit.

7. A pneumatic despatch tube apparatus comprising a transmission tube, an electric motor, means whereby the motor will move air through the tube, a pair of solenoids each adapted to complete the motor circuit, means near one end of the transmission tube to complete the circuit through one solenoid, means at the other end of the transmission tube to complete the circuit of the other solenoid, means operated by either solenoid to complete the circuit through said solenoid independently of the means at the terminal and to prevent the operation of the other solenoid.

8. A pneumatic despatch tube apparatus comprising a transmission tube, an electric motor, means whereby the motor will move air through the tube, a pair of solenoids each adapted to complete the motor circuit, means near one end of the transmission tube to complete the circuit through one solenoid, means at the other end of the transmission tube to complete the circuit of the other solenoid, a movable bar operated by either solenoid to complete the circuit through said solenoid independently of the means at the terminal and to prevent the operation of the other solenoid.

9. A pneumatic despatch tube apparatus comprising a transmission tube, an electric motor, means whereby the motor will move air through the tube, a pair of solenoids each adapted to complete the motor circuit, means near one end of the transmission tube to complete the circuit through one solenoid, means at the other end of the transmission tube to complete the circuit of the other solenoid, a pivoted lever operated by either solenoid to complete the circuit through said solenoid independently of the means at the terminal and to prevent the operation of the other solenoid.

10. A pneumatic despatch tube apparatus comprising a transmission tube, an electric motor, means whereby the motor will move air through the tube, a pair of solenoids each adapted to complete the motor circuit, means near one end of the transmission tube to complete the circuit through one solenoid, means at the other end of the transmission tube to complete the circuit of the other solenoid, a two-armed lever pivoted between the solenoids and operated by either solenoid to complete the circuit through said solenoid independently of the means at the terminal and to prevent the operation of the other solenoid, and means operated by the motor to interrupt the solenoid circuit a predetermined time after the completion of the motor circuit.

11. A pneumatic despatch tube apparatus comprising a transmission tube, an electric motor, means whereby the motor will move air through the tube, a pair of solenoids each adapted to complete the motor circuit, means near one end of the transmission tube to complete the circuit through one solenoid, means at the other end of the transmission tube to complete the circuit of the other solenoid, means operated by either solenoid to complete the circuit through said solenoid and to prevent the operation of the other solenoid, and means operated by the motor to interrupt the solenoid circuit a predetermined time after the completion of the motor circuit.

12. A pneumatic despatch tube apparatus comprising a transmission tube, an electric motor, means operated by the motor to move air through the tube, means for driving the motor in either direction, and a timing means operated by the motor regardless of its direction of rotation to stop the motor a predetermined time after the motor circuit has been completed.

13. A terminal head for a pneumatic despatch tube apparatus formed with a carrier-receiving chamber and a valve chamber having an air inlet and a primary and a secondary outlet, a valve adapted to close one of said outlets and to open the other, means to normally hold said valve to close the primary outlet and to open the secondary outlet, a movable cover to close the carrier-receiving chamber, means to move the valve to open the primary outlet and to close the secondary outlet, means to close the inner end of the carrier-receiving chamber when air is passing through the secondary outlet.

14. A terminal head for a pneumatic despatch tube apparatus formed with a carrier-receiving chamber and a valve chamber having a primary and a secondary outlet, the primary outlet being in communication with the outer end of the receiving-chamber and the secondary outlet being in communication with the inner end of said chamber, a valve adapted to close the primary and secondary outlets, means to normally hold said valve in position to close the primary outlet and to open the secondary outlet, a movable cover to close the outer end of the receiving chamber, means carried by the cover to move the valve to open the primary outlet and to close the secondary outlet, and means operated by the inflowing air to close the inner end of the receiving-chamber when air passes through the secondary outlet.

15. A terminal head for a pneumatic despatch tube apparatus formed with a carrier-receiving chamber, a movable cover, a valve chamber provided with a primary and a secondary outlet, a valve to alternately close

said outlets, means to move said valve to open the primary outlet and to close the secondary outlet, means to return said valve to its normal position, and an air operated valve to close the inner end of the carrier-receiving chamber and to put said chamber beyond the valve in open communication with the secondary outlet in the valve chamber.

16. A terminal head for a pneumatic despatch tube apparatus formed with a carrier-receiving chamber, a laterally swinging cover provided with a rigid portion and a flexible portion, and means to convert the head into a transmission head when the rigid portion of the cover closes the carrier-receiving chamber, and to convert it into a carrier-receiving head when the flexible portion of the cover closes the outer end of said chamber.

17. A terminal head for a pneumatic despatch tube apparatus formed with a carrier-receiving chamber, air operated means to close the inner end of said chamber to prevent air passing back through the said chamber, a movable cover for the outer end of said chamber, and means whereby when the outer end of the carrier chamber is open the inner end thereof will be closed by the air operated means, said means being moved by the inflowing air, whereby carriers may be despatched through said chamber in succession without the loss of air.

18. A terminal head formed with a carrier-receiving chamber, a valve chamber having a primary and secondary outlet, a valve in said chamber, means to normally move said valve to hold the primary outlet closed and the secondary outlet open, the primary outlet being in communication with the outer end of the receiving chamber and the secondary outlet in communication with the inner end of the receiving chamber, an automatic valve adapted to close the communication between said chamber and the secondary outlet when air is entering the chamber through the primary outlet and to open communication between the secondary outlet and said chamber and to close the inner end of the carrier-receiving chamber when air is passing through the secondary outlet, a movable cover provided with a rigid part and a flexible part each of said parts being adapted to independently close the carrier-receiving chamber, means to momentarily move the valve to open the primary outlet and close the secondary outlet when the rigid part of the cover closes the receiving chamber, and means to permanently hold said valve in the said position when the flexible portion of the cover closes the carrier-receiving chamber.

19. A terminal head for a pneumatic despatch tube apparatus formed with a carrier-receiving chamber, a valve chamber, a valve therein, a pivoted cover provided with a rigid part and a flexible part, means adapted to be operated to open the valve when the rigid part closes the carrier-receiving chamber and a cam to hold the valve open when the flexible part of the cover closes the carrier-receiving chamber, and means to normally hold the pivoted cover in such position that the flexible part of the cover will close the carrier-receiving chamber.

20. A terminal head for a pneumatic despatch tube apparatus formed with a carrier-receiving chamber, a valve chamber, a valve therein, a pivoted cover provided with a rigid part and a flexible part, means to temporarily open the valve when the rigid part closes the carrier-receiving chamber and a cam to hold the valve open when the flexible part of the cover closes the carrier-receiving chamber, means to normally hold the pivoted cover in such position that the flexible part of the cover will close the carrier-receiving chamber, and automatically operating means to hold the cover in such position that the flexible part of the cover will be away from the carrier-receiving chamber while air is passing into the carrier-receiving chamber.

21. A terminal head for a pneumatic despatch tube apparatus formed with a carrier-receiving chamber, a valve chamber, a valve therein, a pivoted cover provided with a rigid part and a flexible part, means adapted to be operated to open the valve when the rigid part closes the carrier-receiving chamber and a cam to hold the valve open when the flexible part of the cover closes the carrier-receiving chamber, means to normally hold the cover in such position that the flexible part of the cover will close the carrier-receiving chamber, and means to hold the cover in such position that the flexible part of the cover will be away from the carrier-receiving chamber while air is passing into the carrier-receiving chamber.

22. A pneumatic despatch tube apparatus comprising a transmission tube, an electric motor, means whereby said motor will move air through said tube, means to complete the motor circuit, electrically controlled timing means for opening the motor circuit, and a separate device for closing the timing means circuit through an actuation of the motor starting means, said timing means being adapted for return to its normal position when its circuit is shunted.

23. A pneumatic despatch tube apparatus comprising a transmission tube, an electric motor, means whereby said motor will move air through the tube, a solenoid, means to complete the solenoid circuit, means whereby the solenoid will complete the motor circuit, an electrically controlled timing means.

means whereby the timing means circuit will be completed by the solenoid and through the solenoid winding.

24. A pneumatic despatch tube apparatus comprising a transmission tube, terminals at each end thereof, an electric motor, means operated by said motor for moving air through said tube, means adapted to be operated from one tube terminal to start the motor in one direction, means adapted to be operated from the other terminal to start the motor in the opposite direction, an electrically controlled timing means, and means for completing the timing means circuit when the motor circuit is completed.

25. A pneumatic despatch tube apparatus comprising a transmission tube, a terminal therefor, an electric motor, means operated by said motor to force air into the tube through said terminal, means for directing air into the tube through the outer end of the terminal when said terminal is closed and for directing it into the tube through the inner end of the terminal when the terminal is open, a motor starting means, an electrically controlled timing means, the timing circuit being so arranged that it will be shunted when the motor starting circuit is closed, whereby the timing means will be returned to its normal position whenever the motor starting circuit is closed.

26. A pneumatic despatch tube apparatus comprising a transmission tube, an electric motor, means whereby the motor will move air through the tube, a pair of solenoids to complete the circuit through said motor, means at one end of the transmission tube to complete the circuit through one of said solenoids to drive the motor in one direction, means at the other end of the tube to complete the circuit through the other solenoid to drive the motor in the reverse direction and a movable bar adapted to be operated by either solenoid when the circuit is completed therethrough to prevent the movement of the core of the other solenoid.

27. A pneumatic despatch tube apparatus comprising a transmission tube, an electric motor, means whereby the motor will move air through the tube, two solenoids adapted to independently complete the motor circuit, means at one end of the tube to complete the circuit through one solenoid, means at the other end of the tube to complete the circuit through the other solenoid, an electrically controlled timing means, and means operated by the solenoid to complete the circuit through said timing means and through the solenoid independently of the circuit making means at the ends of the tube.

28. A pneumatic despatch tube apparatus comprising a transmission tube, a carrier receiving terminal therefor, an electric motor, means operated by said motor for moving air through said tube, means adapted to be operated from the terminal to start the motor, a controller bar, means for moving said bar longtiudinally in a step-by-step movement, said means being operated by the motor, and means adapted to be operated by the controller bar to open the motor circuit and thereby stop the motor.

29. A pneumatic despatch tube apparatus comprising a transmission tube, a carrier receiving terminal therefor, means for moving air through said tube, a controller bar, means for mechanically and positively giving said controller bar a step-by-step longitudinal movement, means operated by said bar after it has moved a predetermined distance to stop the air moving means, and means for returning said controller bar to its normal position when the air moving means has been stopped.

30. A pneumatic despatch tube apparatus comprising a transmission tube, an electric motor, means operated by said motor for moving air through said tube, two solenoids to independently complete the motor circuit, means at one end of the tube to complete the circuit through one of said solenoids to drive the motor in one direction, means at the other end of the tube to complete the circuit through the other solenoid to drive the motor in the reverse direction, a controlling bar, means operated by the motor for moving said bar longitudinally and means adapted to be operated by the controlling bar to open the motor circuit.

31. A pneumatic despatch tube apparatus comprising a transmission tube, a reversible electric motor, means operated by said motor for moving air through said tube, two solenoids to independently complete the motor circuit, means at one end of the tube to complete the circuit through one solenoid, means at the other end of the tube to complete the circuit through the other solenoid, and a timing means to open the motor circuit after a predetermined number of revolutions of the motor armature regardless of the direction of rotation of said armature.

32. A pneumatic despatch tube apparatus comprising a transmission tube, an electric motor for moving air therethrough, means for driving said motor in either direction, and a motor-operated timing means for opening the motor circuit regardless of the direction of rotation of said armature.

33. A pneumatic despatch tube apparatus comprising a transmission tube, a motor, means whereby the motor will move air through the tube, means for starting the motor to rotate in either direction and a timing means operated by the motor while rotating in either direction.

34. A pneumatic despatch tube apparatus comprising a single transmission tube, an electric motor for moving air therethrough,

means for driving said motor in either direction, a longitudinally movable bar, means driven by said electric motor for giving said bar a step by step movement and means operated by said bar to stop the said motor after a predetermined time.

35. A pneumatic despatch tube apparatus comprising a single transmission tube, despatching terminals at either end thereof, an electric motor, means operated by the motor to move air through the tube, means for driving the motor in either direction so that air may be moved in either direction through the tube, means actuated from each terminal for completing the motor circuit, and a timing means affecting the operation of said motor at the end of a period of time determined by said timing means and running from the completion of the motor circuit for driving the motor in either direction.

36. A pneumatic despatch tube apparatus comprising a transmission tube, terminals at each end thereof, an electric motor, means operated by said motor for driving air through said tube, means adapted to be operated from one tube terminal to cause said motor to drive said first mentioned means in one direction, means adapted to be operated from the other terminal to cause said motor to drive said first mentioned means in the opposite direction, an electrically controlled timing means, and means for completing the timing means circuit when the motor circuit is completed, said apparatus having provisions for preventing a reversal of said first mentioned means during the transmitting period determined by said timing device.

37. A pneumatic despatch tube apparatus comprising a single transmission tube, despatch terminals at either end thereof, an electric motor, means operated by the motor to move air through the tube, means for driving the motor in either direction so that air may be moved in either direction through the tube, means actuated from each terminal for completing the motor circuit, and a timing means effecting the operation of said motor at the end of a period of time determined by said timing means and running from the completion of the motor circuit for driving the motor in either direction, said apparatus having provisions for preventing a reversal of said motor during said period of time.

In testimony whereof I hereunto affix my signature in the presence of two witnesses this 7th day of February 1908.

JOHN T. NEEDHAM.

Witnesses:
WM. R. DAVIS,
EMMA H. H. KAUFMANN.

Copies of this patent may be obtained for five cents each, by addressing the "Commissioner of Patents, Washington, D. C."