J. L. COURSON.

FLASH MACHINE.

APPLICATION FILED JAN. 24, 1913.

1,080,750.

Patented Dec. 9, 1913.

2 SHEETS—SHEET 1.

Fig. 1.

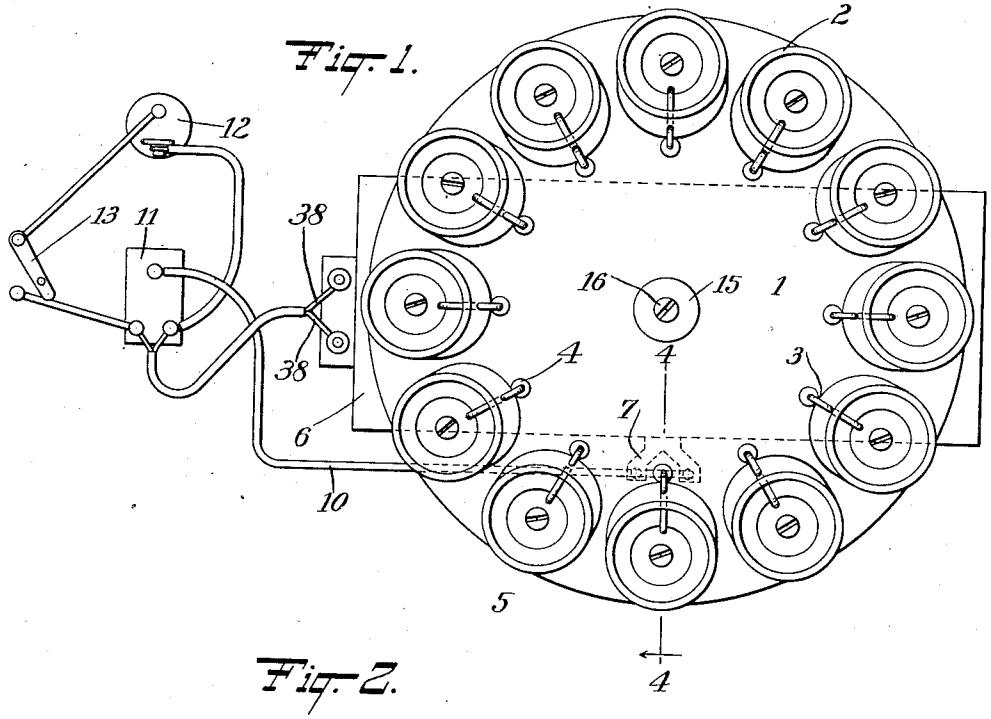

Fig. 2.

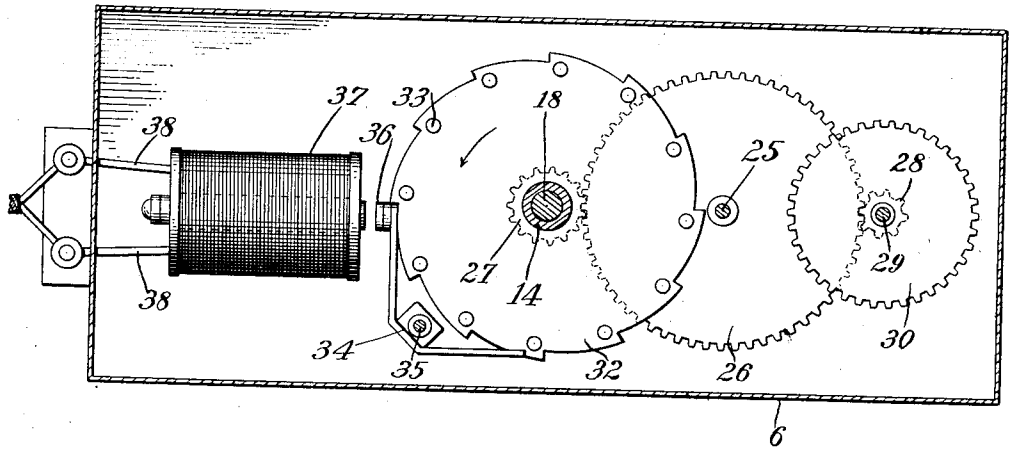

WITNESSES

George Bamboy.

Wm. F. Nickel

INVENTOR,

James L Courson,

BY Munn & Co

ATTORNEYS

J. L. COURSON.

FLASH MACHINE.

APPLICATION FILED JAN. 24, 1913.

1,080,750.

Patented Dec. 9, 1913.

2 SHEETS—SHEET 2.

Fig. 3.

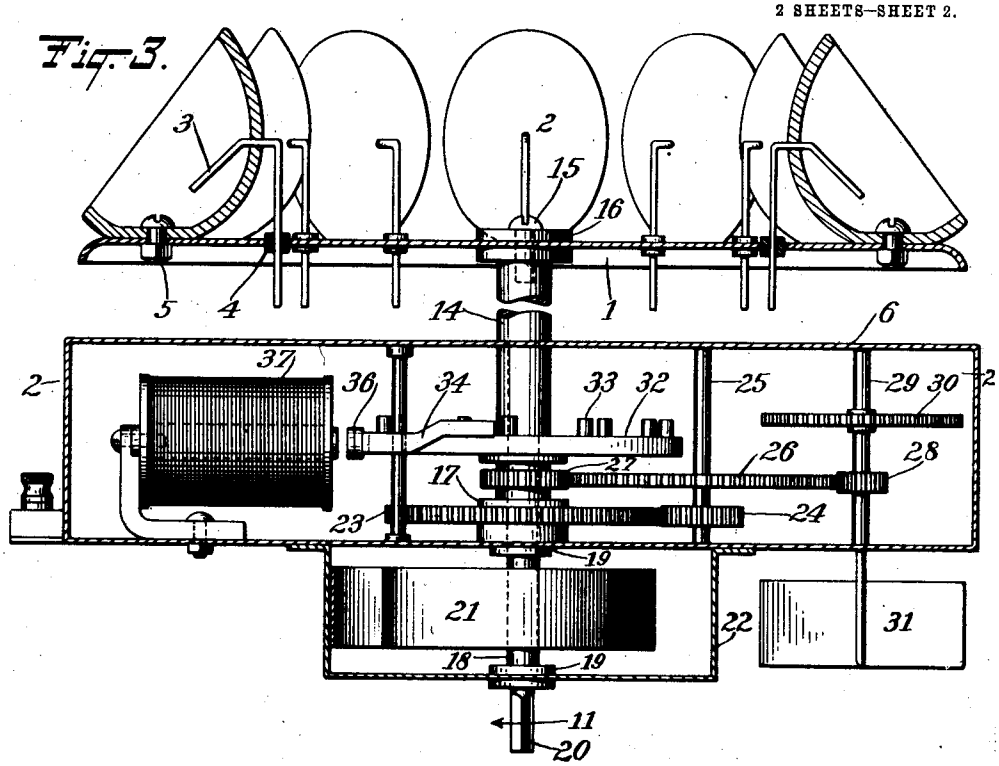

Fig. 4.

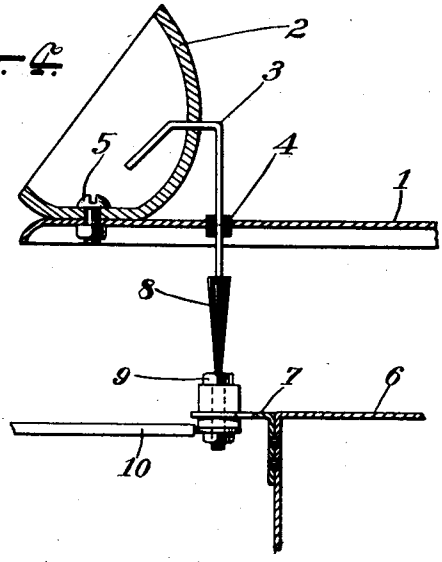

WITNESSES

George Bamby

Wm. F. Nickel

INVENTOR,

James L. Courson,

BY Munn & Co

ATTORNEYS

UNITED STATES PATENT OFFICE.

JAMES L. COURSON, OF BARBERTON, OHIO.

FLASH-MACHINE.

1,080,750. Specification of Letters Patent. Patented Dec. 9, 1913.

Application filed January 24, 1913. Serial No. 743,922.

To all whom it may concern:

Be it known that I, JAMES L. COURSON, a citizen of the United States, and a resident of Barberton, in the county of Summit and State of Ohio, have invented a new and Improved Flash-Machine, of which the following is a full, clear, and exact description.

My invention relates to an improvement in flash machines, preferably for photographic uses, and the object thereof is to provide a construction which includes a number of receptacles receiving the materials for producing the flash, together with suitable mechanism for causing the materials in each receptacle to be ignited in turn in a positive and certain manner when the camera shutter is thrown open to make the exposure for the picture that is to be taken.

Reference is to be had to the accompanying drawings forming a part of this specification, in which the same characters of reference indicate the same parts in all the views.

Figure 1 is a top plan of my invention showing the circuit connections; Fig. 2 is a sectional view substantially on the line 2—2 of Fig. 3; Fig. 3 is a vertical longitudinal section; and Fig. 4 is a similar sectional view of a detail.

My invention comprises a rotating plate or disk 1 which carries mounted around the periphery thereof a number of vessels 2 into each of which projects an igniting electrode 3. These electrodes 3 are mounted by means of insulating bushings in the plate 4 passing through the same at one end and through the vessels 3 at the other, the ends thereof inside of the vessels being bent down into sparking relation with respect to an electrode 5 which is in the form of a bolt or nut holding the vessels 2 to the plate 1 and in electrical contact with this plate. The plate 1 is rotatable by means of mechanism to be presently described, and as it rotates each of the electrodes 3 is connected to a source of high tension current in turn by means of a circuit closing device mounted upon a casing 6 below the plate 1, which houses the controlling mechanism. The electrode 3 by passing into the cup or vessel 2 from the rear or at a point removed from the bolt 5 prevents the vessel from turning on the bolt as an axis, and consequently a single bolt may be employed to secure each vessel to the support 1. This circuit-closing mechanism comprises a bracket 7 mounted upon the side of the casing 6 and supporting a brush 8 made of some conductive material carried upon a binding post 9 supported by the bracket 7, but insulated therefrom and connected by means of a conductor 10 to a spark coil 11. This spark coil 11 is furnished with current from a battery 12, and the circuit is controlled by means of a switch 13. Obviously, as the disk 1 rotates, each of the electrodes 3 will come into contact at its lower end with the brush 8 by turns, and if the circuit of the battery 12 is closed at this time the coil 11 will generate high tension current at will, causing a spark to jump between the upper end of the electrode 3 and the bolt 5, and ignite the flash materials in the cups 2.

The plate 1 carrying the vessels 2 is mounted upon a sleeve 14, being secured centrally to this sleeve at its upper end by means of a washer 16 and a screw 15 which passes into the sleeve 14 and clamps the plate 1 against a flange at the upper end of the sleeve. This sleeve is hollow and it terminates at its lower end in a flange 17 inside of the case 6. This flange bears the weight of the sleeve, the disk and the vessels 2 and rests upon a part of the driving mechanism, which will now be described. A spindle 18 passes inside of the casing 6 through the bottom thereof and is provided with collars 19, one of which engages the bottom of the casing and the other of which is located near the lower end 20, which is polygonal in cross-section to enable it to be engaged by a crank or key in turn. This shaft is connected to a coiled spring 21 secured to the shaft 18 at one end and secured at its other end to a cover 22 made fast to the bottom of the casing 6. The lower flange or collar 19 engages the bottom of the cover and the shaft 18 is thus held against longitudinal movement.

Inside the casing 6 the shaft 18 carries a gear wheel 23 which has a hub to rest upon the bottom of the casing 6, and on this gear wheel the flange 17 rests. The wheel 23 meshes with a pinion 24 on a shaft 25, and this shaft also carries a gear 26 meshing with a pinion 27 on the sleeve 14 to turn the same. It also meshes with a pinion 28 on another shaft 29 which carries a wheel 30 acting as a sort of balance wheel or flywheel and terminating outside the casing 6 in a section carrying vanes 31 which act as speed

regulators when the mechanism is in operation.

Rigidly mounted on the sleeve 14 above the gear 27 is a ratchet disk 32 carrying stops 33, and this ratchet is engaged by means of a pawl 34 pivotally mounted on a stud 35. This pawl is shaped like a bell-crank lever and has both its ends in proximity to the ratchet disk. It carries on the end which engages the teeth of the ratchet a magnetic member 36 to be attracted by an electro-magnet 37. This electro-magnet is connected by conductors 38 in series or in parallel with the primary winding of the coil 11.

The operation of my invention will now be set forth. The coil 11 may be an ordinary coil, such as is commonly used for ignition purposes, especially on gas engines. One terminal of the secondary winding will be connected to the conductor 10 and the other one grounded in any convenient fashion on the framework of the mechanism. The switch 13 will be connected to the bulb which controls the camera shutter, and when the switch 13 is closed the shutter will be thrown open to take the picture. This will energize the coil 11 at the time when the shutter is open and cause a spark to pass from the electrode 3 which is in circuit with the brush 8, into the cup associated therewith and produce a flash. At the same time, the magnet 37 attracts the member 36, drawing the pawl out of engagement with the ratchet and allowing the spring 21 to rotate the gear train to turn the sleeve 14. This moves the disk 1 to bring the next vessel 2 into such relation that its electrode 3 will contact with the brush 8, so that when the next exposure is to be taken a flash can be produced the same as in the first instance. Of course the switch 13 will be opened and closed instantaneously, and when the next vessel 3 is brought into operative position the circuit of the high tension winding of the coil 11 will be open. Furthermore, it will be observed from an inspection of Fig. 2 that when the member 36 is attracted the opposite end of the pawl 34 will be in toward the center of the ratchet 32. In this position, after the ratchet has moved a distance equal to the space between any two adjacent projections 33, this end of the pawl will be struck by one of these projections and moved in such a way as to bring the end carrying the member 36 back into position to engage one of the ratchet teeth and hold the ratchet against further movement. This prevents the disk 1 from being shifted more than the required distance to bring the next vessel into operative position. The spring 21 and the gear train actuating the sleeve 14 may be an ordinary clock mechanism, and the spring can be wound up by any convenient means engaging the polygonal lower end of the shaft 18.

From the above description it will be seen that I have produced a positive and certain mechanism for producing as many flashes as there are vessels containing the flash materials on the plate or platform 1. The flash takes place in each instance in synchronism with the opening of the camera shutter, and the same movement of the parts which produces the flash shifts the next vessel into operative position, so that another flash can be produced when the primary circuit of the coil 11 is again closed.

I wish to have it understood that the above description is illustrative only, and that I do not care to be limited to the exact arrangement of parts shown and described, but reserve to myself the right to make such changes in the shape, size and arrangement of the parts as fairly fall within the scope and spirit of my invention.

Having thus described my invention, I claim as new and desire to secure by Letters Patent:

1. In a flash machine, the combination of a revolving plate, a plurality of vessels for receiving flash materials arranged around the periphery of said plate, a plurality of electrodes extending through said plate and insulated therefrom, each of said electrodes extending into one of said vessels, a corresponding electrode in each of said plates grounded upon said plate, a brush mounted below said revolving plate, a source of high tension current connected to said brush, and means for revolving said plate to bring each electrode into contact with said brush by turns to ignite the materials in the vessel associated therewith.

2. The combination of a plurality of vessels for receiving flash materials, means for igniting said flash materials, and means for energizing said igniting means and simultaneously shifting the relative position of the vessels, whereby each of said vessels will be brought by turns into operative position.

3. The combination of a plurality of vessels for receiving flash materials, a movable support for said vessels, a ratchet for controlling the movements of said support, a pawl to engage said ratchet at one end to prevent the movement thereof, means for moving said end out of engaging relation, the pawl having its opposite end extending into proximity to said ratchet, and means carried by the ratchet to engage the opposite end of the pawl to move the first-named end back into engaging relation and prevent further movement of said ratchet.

4. The combination of a plate, a plurality of vessels mounted upon said plate to receive flash materials, means for igniting the materials in each of said vessels, means for

connecting said igniting means in turn to a source of energy, a ratchet for moving said plate to bring each of said igniting means by turns in connecting relation with said source, a pawl having one end to engage the ratchet and having its other end extending into proximity thereto, means carried by the ratchet for engaging the opposite end of the pawl, whereby when the first-named end is moved out of engaging relation the ratchet will be turned a certain distance and will engage the opposite end of the pawl so as to bring the first-named end back into engagement with the ratchet, and means in circuit with said source for moving the first-named end of the pawl.

5. In a flash machine, the combination of a rotating plate, a plurality of vessels arranged around the periphery of said plate, a plurality of electrodes extending through said plate, each of said electrodes extending into one of said vessels, a corresponding electrode extending into each of said vessels and grounded upon said plate, means for rotating said plate, a ratchet disk for controlling the movements of said plate, a pawl mounted adjacent said ratchet to engage the same at one end, a magnet to attract the pawl, means carried by the ratchet to engage the opposite end of the pawl, a brush mounted below said plate in position to contact with the electrodes by turns, a source of high tension current connected to said brush, and means for energizing said magnet and said source, whereby when the energizing means is in action the electrode in circuit with the brush will spark and the magnet will move the pawl out of engagement with the ratchet to permit the plate to turn, the means on the ratchet then engaging the opposite end of the pawl after the plate has turned a certain distance to move the first-named end of the pawl back into engagement with the ratchet and prevent the further movement thereof until the next flash is to be produced.

6. A flash machine, comprising a support, a vessel for holding material to be ignited, and a jump spark igniter consisting of a single fastener securing the vessel and support together, and serving as an electrode, and another electrode disposed in coöperative relation with the first and engaging the vessel to prevent the same from turning on the said fastener as an axis.

7. A flash machine, comprising a support, a vessel for holding the material to be ignited, a fastener for securing the vessel to the support and forming an electrode in the vessel, and a second electrode fixed with respect to the support and extending into the vessel through the wall thereof and serving to hold the vessel against movement around the said fastener as an axis.

In testimony whereof I have signed my name to this specification in the presence of two subscribing witnesses.

JAMES L. COURSON.

Witnesses:
EDWARD SIGLER,
LEE H. LYTLE.