No. 610,250. Patented Sept. 6, 1898.

E. THUNDERBOLT.

GOVERNOR FOR ENGINES.

(Application filed Apr. 10, 1897.)

(No Model.) 2 Sheets—Sheet 1.

Fig. 1.

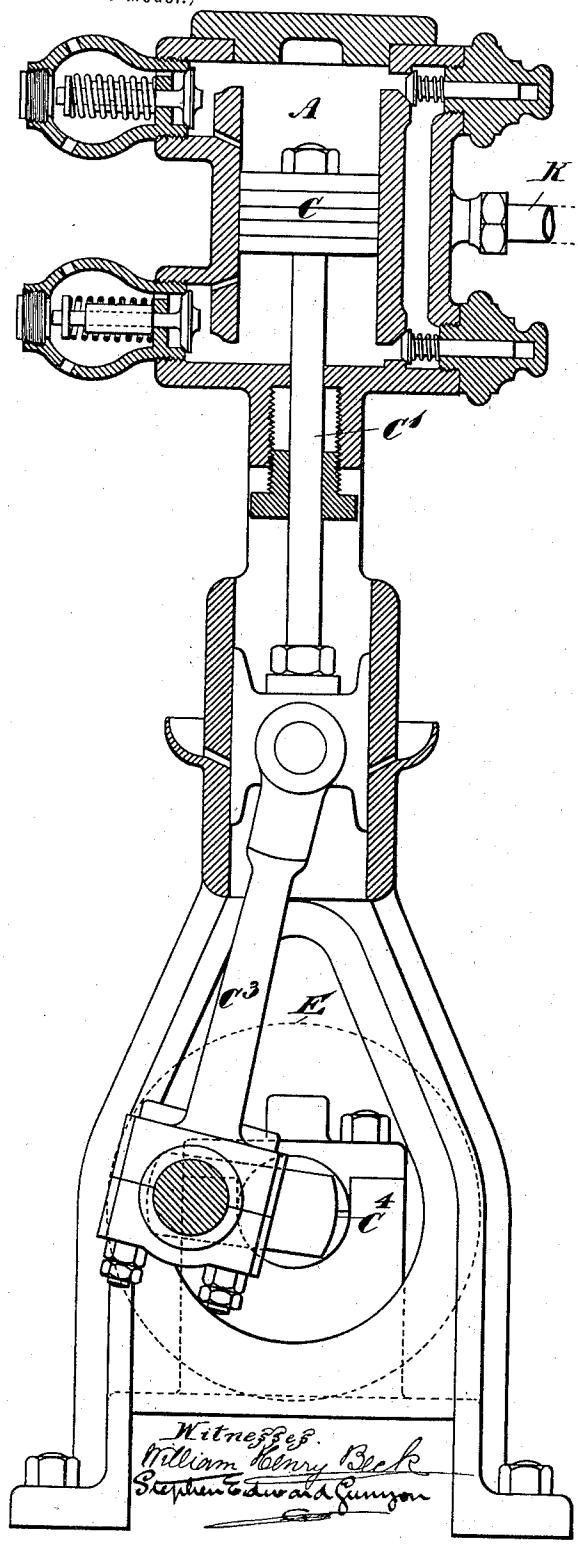

Fig. 2.

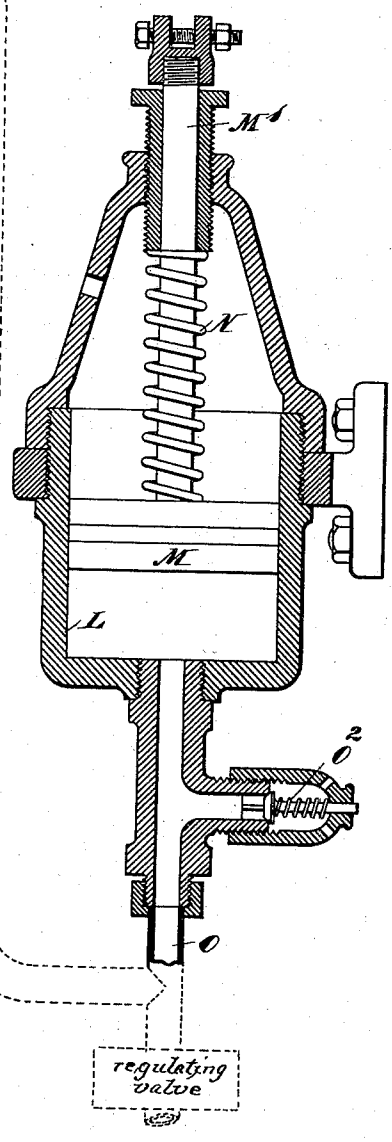

Witnesses.
William Henry Beck
Stephen Edward Gunyon

Inventor.
Edward Thunderbolt

THE NORRIS PETERS CO., PHOTO-LITHO., WASHINGTON, D. C.

No. 610,250. Patented Sept. 6, 1898.

E. THUNDERBOLT.

GOVERNOR FOR ENGINES.

(Application filed Apr. 10, 1897.)

(No Model.) 2 Sheets—Sheet 2.

Fig. 3.

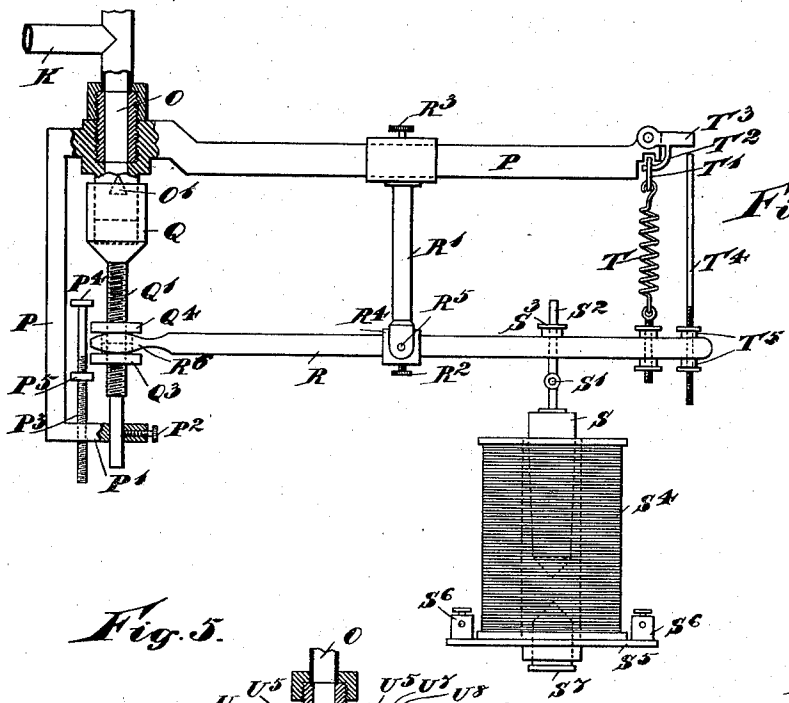

Fig. 5.

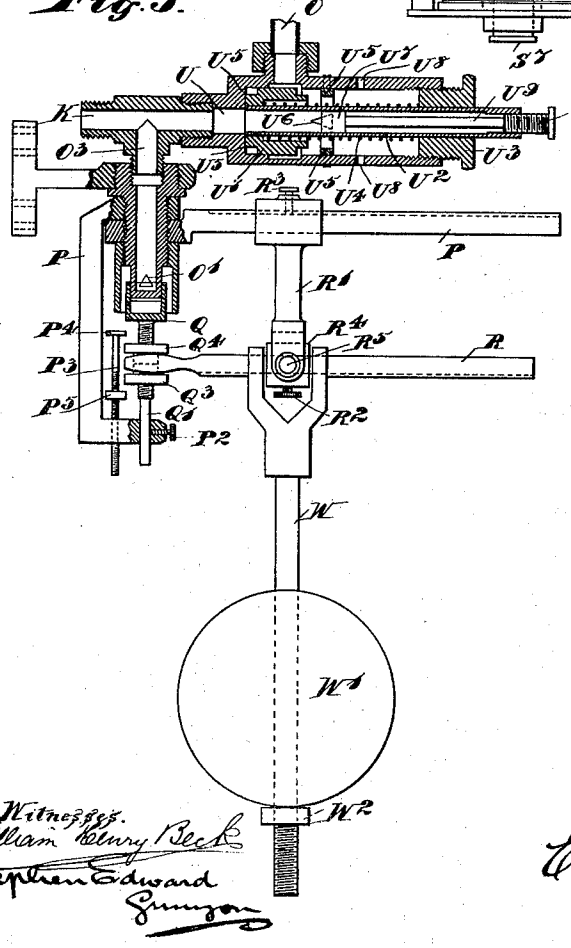

Fig. 4.

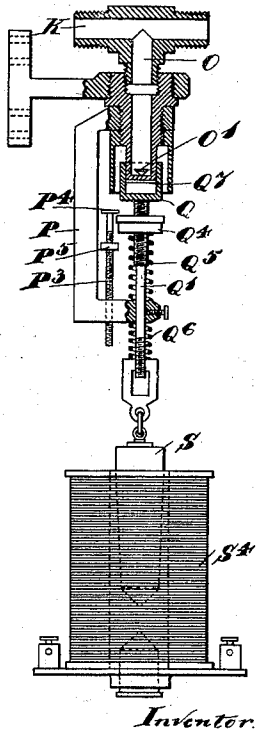

Witnesses.
William Henry Beck
Stephen Edward Gunyon

Inventor.
Edward Thunderbolt.

THE NORRIS PETERS CO., PHOTO-LITHO., WASHINGTON, D. C.

UNITED STATES PATENT OFFICE.

EDWARD THUNDERBOLT, OF CARLTON, VICTORIA.

GOVERNOR FOR ENGINES.

SPECIFICATION forming part of Letters Patent No. 610,250, dated September 6, 1898.

Application filed April 10, 1897. Serial No. 631,579. (No model.)

To all whom it may concern:

Be it known that I, EDWARD THUNDERBOLT, engineer, a subject of the Queen of Great Britain, residing at Drummond street, Carlton, in the Colony of Victoria, but at present residing at 158 Woodlands road, Glasgow, Scotland, have invented an Improved Governor for Engines, of which the following is a specification.

The object of this invention is to provide a quick and smoothly acting governor specially applicable for use in controlling the speed of marine engines, land engines, steam or water turbines, and other motive-power engines by regulating the supply of motive fluid to same. The governor is also applicable for controlling electric motors or dynamos. It may in some cases be employed to regulate the speed of machinery by operating brake-gear.

To make my invention clear, I will now refer to the accompanying drawings, in which—

Figure 1 shows a vertical section of an air-pump employed in connection with my governor. Fig. 2 is a vertical section of a governing or controlling cylinder connected with the said air-pump. Fig. 3 shows an electrical contrivance for regulating the air-pressure upon the piston in the said governing or controlling cylinder. Fig. 4 shows a modification of Fig. 3. Fig. 5 shows a modification of the arrangement shown in Fig. 3, in which a mechanical device is used in place of the electrical as shown in that figure.

In the drawings, A represents one of the cylinders of a pair of air-pumps, the piston C of which is operated by means of a piston-rod C′ and connecting-rod C^3 from a crank-shaft C^4, set in motion by a pulley-wheel E, fixed thereon and placed in communication, by a belt, pitch-chain, or otherwise, with the shaft of the engine the speed of which is to be regulated. This pulley-wheel may be in the form of a spur or sprocket wheel, or it may be in the form of a compound wheel—that is, having its central portion grooved out to form a rope or belt pulley, the periphery of the wheel on one side of such groove being in the form of a spur or cog wheel and on the other side in the form of a chain sprocket-wheel, so that with such a wheel the means of communicating motion from the engine to the pumps which may be most convenient may be used without alteration or addition thereto. I employ pumps with short strokes and large diameters in preference to long strokes and small diameters. If a small diameter and long stroke are preferred, the piston-rods of the air-pumps may be directly attached to the cross-head pin of the engine or motor the speed of which is to be regulated; but if a shorter stroke be required it may be driven by an eccentric placed upon the main shaft or by any suitable arrangement of levers or otherwise.

The air from the air-pumps flows by a pipe K to the governing-cylinder L. M is a piston having a rod M′ within such cylinder, which is encircled by a spiral spring N under compression, said spring being arranged to keep forward the piston in the cylinder until the pressure of such spring is overcome by the force of air entering by the pipe K acting on the front area of said piston M. The piston-rod M′ may, if the design of the engine permit, enter into the packing-glands of a shut-off valve placed in the steam-pipe of the engine, or if the governor has, owing to local peculiarities, to be placed at any considerable distance from the steam-pipe the piston-rod M′ of the governing-cylinder may have attached to it connecting links, levers, &c., to operate any suitable kind of regulating-valve placed in the motive-fluid passage of the engine or motor or for operating brake-gear or a switch-lever in connection with an electric installation. This cylinder L is connected by a pipe O to a pressure-regulating device, which, in some cases, is used in connection with my governor. O^2 shows a safety-valve set in this pipe.

Fig. 3 illustrates the apparatus employed in connection with the governor when same is required to control the speed of dynamos through the medium of the engine of an electric-light installation. This pressure-controlling device consists of a rigid frame P, which supports the pipe or passage O which is in communication with the pipe K. This passage has an escape port or ports O′, which is or are triangular in form, and said pipe terminates within a cylindrical box Q, which forms a slide-valve. This valve is supported upon a screwed rod Q′, and the amount of

opening of the triangular port O′ is controlled by the said valve, which slides with its rod Q′. The movement of this rod, and consequently the escape of air through the port O′, is controlled by a lever R, which has a fulcrum-standard R′ arranged to slide at its top upon the fixed beam P and at its lower end along the lever R. The sliding standard R′ is secured in the desired position on the lever and fixed beam by means of thumb-screws R^2 R^3. The lever R turns upon pins R^5, which are set in the bifurcated end of the standard R′ and bear against the sleeve R^4. The lever R has adjustably connected thereto a magnet-core S, which is connected by a universal joint at S′ to a screw-rod S^2. The height of such core is adjusted by the thumb-screw S^3. The core S is arranged to depend partially into a coil S^4. This coil is supported upon a base-plate S^5, which carries the terminals S^6 S^6, to which the wires from the general circuit or shunt of the dynamo are connected. The coil S^4 is provided with a magnetic plug S^7, which assists to attract the core S, and can be adjusted toward or away from the said core by screwing it upward or downward in the base-plate.

The lever R has a safety appliance connected therewith, which will automatically act to operate the lever R, rod Q′, and valve Q, so as to close the port O′ and prevent the escape of air from the pumps and so increase the pressure upon the piston M within the cylinder L and force said piston forward and close or shut off the steam to the motor-engine. This safety appliance consists of a spring T, which is adjustably secured to the lever R by a screw-rod and thumb-screws. The opposite end of the spring is secured to a slotted frame T′. A pin or hook T^2 is arranged to project into the slot of this frame and so support the lever through the medium of the spring. This hook is pivoted at the end of the fixed beam P and has a projecting arm T^3. A vertical rod T^4 is adjustably secured to the lever R and is arranged to engage with the projecting arm T^3, its distance from such arm being adjustable by the thumb-screws T^5. The opposite end R^6 of the lever R is bifurcated, a branch of the fork passing at either side of the rod Q′ and between the nuts or thumb-screws Q^3 and Q^4. The bifurcated end of the lever may thus be adjusted at the required height on the rod Q′ by screwing the nuts Q^3 and Q^4 to the desired positions on the guide-rod.

P′ is an arm projecting from the frame P and through which the lower end of the rod Q′ passes.

P^2 is a set-screw which can be screwed tightly against the rod Q′, so as to lock same when required—as, for example, when not under control of the lever R.

Another device for locking the rod Q′ in position and limiting the travel thereof consists of a screwed pin P^3, screwed into the guide-arm P′ and provided with a head P^4 and adjustable nut P^5. This pin P^3 and the nut P^5 on it can be so adjusted that the nuts Q^3 Q^4 are held between the head P^4 and the nut P^5, so that the rod Q′ cannot move up or down beyond the required predetermined range.

By locking the rod Q′ with the port O′ partially open the appliance may be employed to control any desired uniform speed in motors or engines generally.

In the arrangement shown in Fig. 4 the lever R is dispensed with and the core S of the electromagnet or solenoid is connected directly with the rod Q′, that actuates the valve Q. In this case the weight of the valve Q, rod Q′, and core S is balanced by a spring Q^5, the upper end of which bears against the adjustable nut Q^4 and the lower end against the arm P′. The spring Q^6 serves for adjusting minutely the action and stroke of the spring Q^5 and valve Q. As in this arrangement the lever R is dispensed with and the closing of the port O′ has to be effected by the downward movement of the core S and valve Q, the position of the port O′ is reversed and the closing is effected by the upper edge of a slot Q^7, formed in the side of the valve Q.

Fig. 5 shows the pressure-controlling device designed particularly for use in marine engines and arranged in such a manner that it may be adjusted so as to obtain efficient action under altered conditions—such as when a vessel is traveling against a head sea, through a beam sea, or with a following sea. In such arrangement the appliance consists of the following: A cylinder U is in communication by the pipe K with the air-pumps. A slide-valve U′ is set within such cylinder U and controls the opening to the passage O. The valve U′ has attached to it a pipe U^2, which passes through a hole in the cover U^3 of this cylinder. This pipe, between the cylinder-cover U^3 and valve U′, has a spiral spring U^4 encircling it, which keeps the said valve in its forward position—that is to say, toward the left in the figure—until overcome by the air-pressure from the pumps. U^5 are stops to limit the travel in either direction of the said valve. The pipe U^2 has a port U^6 of triangular form, the amount of opening of said port being regulated by an adjustable plug U^7. This plug is connected by a rod U^9 to the plug thumb-screw U^{10}, which screws into the open end of the pipe U^2. U^8 shows an opening for the exhaust-air when the valve U′ is in its forward position. This contrivance is employed on marine engines when vessels provided with the governor are traveling through beam or with following seas; but when the vessel is traveling against a head sea an appliance having parts similar to those described in connection with my electric contrivances is employed. This consists of the branch pipe O^3, which is in communication with the cylinder U, and has a triangular escape-port O′, the opening of which is controlled by a slide-valve Q in a manner

similar to that already described in connection with the electrical appliances, Figs. 3 and 4. A sliding fulcrum is employed similar to that described and marked R′ to R⁵, Figs 3 and 4. It has the addition of a hanging rod W, which is suspended from the lever R and has a weighted ball W′. This rod W is arranged to slide on the lever with the sliding fulcrum-standard R′, so as to decrease or increase the range of travel of the bifurcated end of the lever R, and consequently the motion of the slide-valve Q. The ball W is vertically adjusted upon the screw portion of its rod by the nut W². The ball and rod form a pendulum which will oscillate with the motion of the vessel and so move the bifurcated end of the lever up and down, thus operating the rod Q′ and valve Q, so as to open or close the escape-port O′. The oscillating motion of the pendulum will thus control the air-pressure upon the piston M in the governing-cylinder L and cause it to act upon the throttle-valve lever, so as to anticipate and prevent any racing of the engine and propeller during the pitching motion of the vessel when traveling against a head sea.

The *modus operandi* of the invention is as follows: Assuming the governor to be employed to control the engine or motor of an electric-lighting plant, the pressure-controlling device illustrated in Figs. 3 and 4 would be employed and connected with the governor. The air-pumps, which receive their motion from the engine the speed of which is to be regulated, will take in a supply of air and discharge same into the pipe or passage K, and thence to the governing-cylinder L. The amount of escape of air through the port O′, and consequent pressure of the air upon the piston M, is controlled by the increase or decrease of the amount of load or number of lights in the system. For instance, if a number of lights in the circuit be suddenly switched on a decrease of current will pass through the solenoid-coil S⁴, and consequently less attractive force will be exerted on the core S, thus allowing the spring T to act to raise one end of the lever, so as to lower the valve Q and open the port O′. An increased escape of air thus takes place through the port O′, and consequently a reduced pressure is exerted upon the piston M, which will then move forward owing to the pressure of the spring N, which encircles the rod N′, thus actuating the said rod to open the throttle of the engine or motor and cause an increase of speed of such engine, which will be communicated to the dynamos. With a switching off of lights the reverse action takes place.

If the current be suddenly cut off from the circuit owing to breakage of belting or circuit or any other cause, the safety appliance shown in Fig. 3 will come into operation, so as to prevent the racing away of the engine. In such case the pull of the core S is relaxed, and the spring T causes one end of the lever R to jump up and with it the rod T⁴, which then strikes arm T³ and releases the hook T² from the frame T′, thus causing that end of the lever R to drop by the force of gravity and so close the port O′. The air-pressure on the piston M is thereby increased and forces the piston M and rod M′ back, completely shutting the throttle-valve, so as to stop the engine.

In the arrangement shown in Fig. 4 the spring Q⁵ and port Q⁸ act as a safety appliance in the following way: When the electric current is cut off and the pull on the core S ceases, the spring Q⁵ causes the valve Q to rise, and the lower edge of the port Q⁷ closes the port O′, and the engine is stopped by the consequent movement of the piston M.

When my governor is employed on marine engines, the pressure-controlling appliance illustrated in Fig. 5 is employed. If the vessel is traveling through a beam sea or with a following sea, the port O′ will be closed by the valve Q and valve-rod Q′, being locked by the set-screw P² or the locking-pin P³. The air from the pumps will enter the cylinder U by the pipe K, the plug U⁷ having been previously adjusted to allow the escape through the port U⁶ of a quantity of air equivalent to that pumped by the air-pumps when working with the engine running at the predetermined maximum speed. As the ports U⁸ are larger in area than the port U⁶, the air will escape through the former with no tendency to pass up passage O behind the valve U′, and consequently no pressure is exerted on piston M. The valve U′ is at the same time held forward by the spring U⁴, so as to prevent the passage of air from the cylinder U directly to the pipe O. If the engine be increased beyond such speed, more air will be immediately pumped by the air-pumps than the escape at the port U⁶ will allow, so that the air acting against the plug U⁷ and valve U′ will force the latter backward, so as to open the passage directly to the pipe O. The air then produces a pressure upon the face of the piston M in the governing-cylinder L and pushes the said piston M and its rod backward, so as to completely close the engine throttle-valve connected with the said piston-rod M′, and whenever the engine attempts to race the piston M in the governing-cylinder L will be immediately forced back in such a manner as to close the throttle-valve in the steam-pipe.

The tension of the spring U⁴ should be adjusted so that the slide-valve U′ will resist a greater pressure to the square inch than the spring N in the governing-cylinder L. On the engine returning to a normal speed the slide-valve U′ will return forward owing to the reduced air-pressure in the cylinder U, thereby opening the passage from the pipe O to the exhaust-port U⁸, which allows of the escape of air from the cylinder L. When, however, the ship is pitching, as in a head sea, and the screw comes out of water, the pendulum W is brought into action and valve Q liberated, so as to be operated by the pen-

dulum, and port U^6 is closed by the plug U^7, so that no air can pass that way from pipe K. Then so long as the screw remains immersed and the engines run at normal speed all the air pumped by air-pumps escapes through port O′; but if the stern of the ship rises so as to lift screw out of water pendulum W closes port O′ by valve Q, and as the air cannot then escape at O′ the pressure immediately rises and acts upon the front end of valve U′ and plug U^7, moving them to the right and opening passage from K to O, but at the same time shutting passage from O to space behind valve U′. Air-pressure then moves piston M in cylinder L and shuts throttle-valve. Then when the ship goes down at stern, so as to immerse screw again, the pendulum opens port O′ by valve Q, reducing pressure on face of valve U′ and plug U^7, and spring U^4 moves these to left, shutting passage from K to O, but opening passage O to space behind valve U′, so that air in cylinder L escapes quickly through ports U^8, and piston M is moved back by spring N, opening throttle-valve again quickly. By this means no time is lost in getting steam into engines again immediately the screw is sufficiently immersed to utilize the power of the engines without their racing.

It will be understood that the action of the governing devices above described is dependent partly upon variations in the supply, by pumps driven at a speed depending upon that of the engine to be governed, of operating fluid to the governing or controlling cylinder and partly upon variations in the area of the outlet for such fluid from the said governing or controlling cylinder, effected in the one case by variations in the electric current and in the other by the fore-and-aft inclination of the vessel relatively to a pendulum suspended therein.

The pendulum W may be used alone in connection with valve Q and outlet-port O without the valve U′. In that case pipe K communicates direct through pipe O with the controlling-cylinder L, and the regulation of speed is dependent upon the variation of the outlet-port O′ by the action of the pendulum in the following way: When the vessel is on an even keel or down at the stern, so that the propeller is immersed, the valve Q is held or operated by the pendulum W, so that the port O′ allows all the air pumped by the air-pumps to escape through it, and the piston M in the controlling-cylinder L is not moved, and consequently the throttle-valve remains wide open; but when the stern of the vessel rises, so as to take the propeller more or less out of the water, the pendulum W moves valve Q and closes port O′ more or less and prevents escape of air that way. The air-pressure then rises and piston M is moved in cylinder L so as to close the throttle-valve more or less. Then when the stern of the vessel falls again the pendulum W moves valve Q in the opposite direction, opening port O′, allowing air to escape, and spring N then moves piston M, so as to open throttle-valve again. It will be seen, however, that the escape of the air through port O′ will be comparatively slow, consequently that the throttle-valve will be reopened slowly, and therefore the engines will not be able to maintain their proper speed, as the propeller becomes again immersed. The valve U′ when used obviates this, because a comparatively small escape of air at O′ enables the valve U′ to move sufficiently to the left to expose a comparatively large opening behind it to passage O, so that the air in the cylinder L escapes rapidly through such openings into annular space around U^2 and then through ports U^8 into the atmosphere, enabling spring N to force piston M toward the bottom of the cylinder L and to open the throttle-valve quickly and before there has been time for the air to escape at O′.

Having now particularly described and ascertained the nature of the said invention and in what manner the same is to be performed, I desire to have it understood that I am aware that it is not novel to employ as a governing device for motive-power engines an air or other pump, a controlling-cylinder connected with the said pump, a piston in such controlling-cylinder connected with the throttle-valve of the engine, and a valve controlling the outlet from the controlling-cylinder, and that I do not claim, broadly, such a governing device; that I am also aware that it is not novel to employ an electromagnet for operating at the same time both an inlet and an outlet valve in connection with the controlling-cylinder of such a governing device, and that I do not claim an electromagnetic device acting in that manner, but only an apparatus in which the electromagnet operates the outlet-valve alone, because I have found that better results can be obtained by leaving the area of the inlet-opening to the controlling-cylinder unaltered by variations in the electric current after the said inlet-opening has once been properly proportioned, and by varying the area of the outlet-opening only by variations in the electric current; and that I am likewise aware that it is not novel to employ in connection with marine engines a pendulum suspended in the ship and adapted to move the throttle-valve of the engine direct or through the intervention of atmospheric pressure in conjunction with the condenser-vacuum or by admitting steam from the boiler to a relay-cylinder the piston of which acts upon the throttle-valve, and that I do not claim the use of a pendulum in such manner; but that

What I do claim is—

1. In a governing device of the kind herein described the combination with the controlling-cylinder of such device and the pump operated by the engine for supplying air to said cylinder, of a pipe or passage O having

a port O′, a slide-valve Q, a lever R connected with such valve and having a sliding fulcrum, and a controlling device connected to said lever R, substantially as and for the purpose described.

2. In a governing device of the kind herein described the combination with the controlling-cylinder, of the pipe or passage O, having port O′, the slide-valve for said opening, the lever connected to said slide-valve, means connected to said lever for moving the same to vary the size of the valve-opening, and the adjustable stops for limiting the movement of the lever, substantially as described.

3. In a governor for marine engines, the combination with the controlling-cylinder of such device and the pump operated by the engine for supplying air to said cylinder, of the pressure-valve casing connected with said controlling-cylinder, an air-supply pipe connection therefrom to the air-pump, the pressure-valve therein, the second valve-casing also connected with the air-supply pipe, a valve therefor, a pendulum for operating the same, and means for locking said last-named valve out of operation when the first valve is in operation, substantially as described.

4. In a governing device of the kind herein described the combination with the controlling-cylinder of such device of a pipe or passage O, a port O′, a slide-valve Q, a lever R having a sliding standard R′, a pendulum W and a fixed beam P, substantially as and for the purpose described.

5. In a governing device of the kind herein described the combination with the controlling-cylinder of such device and the pump operated from the engine for supplying air to said cylinder, of a pipe or passage O, a port O′, a slide-valve Q, a rod Q′, a frame P, and a locking-pin P^3, with adjustable nut P^5, and the controlling device for operating the valve Q, substantially as and for the purpose described.

In witness whereof I have hereunto set my hand in presence of two witnesses.

EDWARD THUNDERBOLT.

Witnesses:

WILLIAM HENRY BECK,

STEPHEN EDWARD GUNYON.