Nov. 13, 1945. J. G. SMYLIE 2,388,938

FIRING HEAD FOR GUN PERFORATORS

Filed Aug. 31, 1944 2 Sheets-Sheet 1

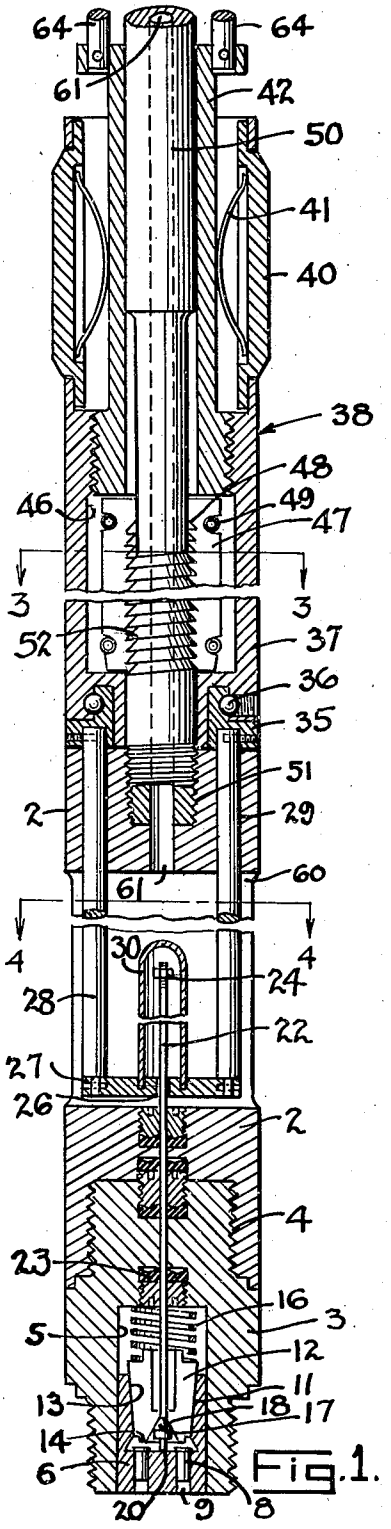

Fig. 1.

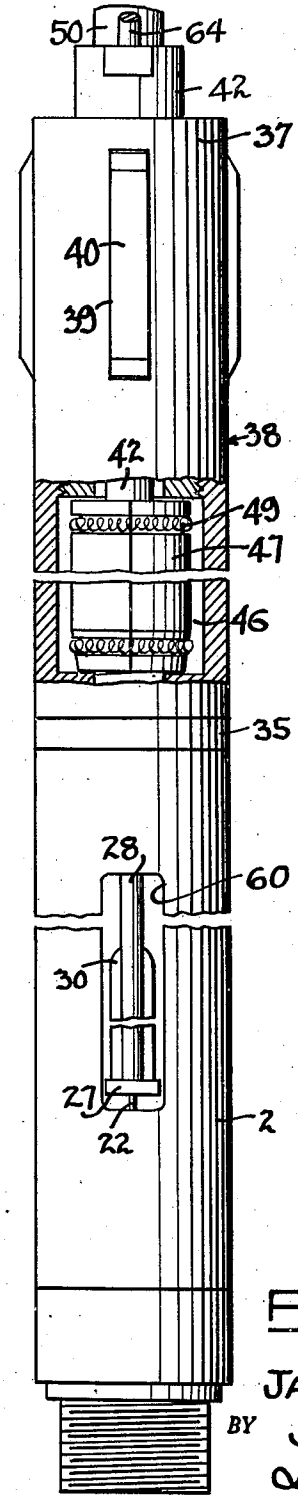

Fig. 2.

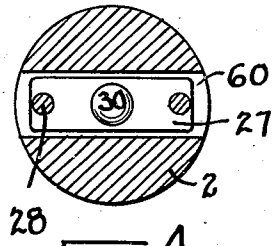

Fig. 4.

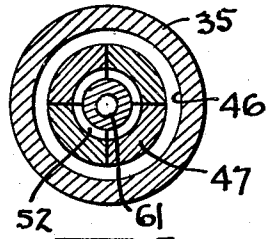

Fig. 3.

INVENTOR.
JAMES G. SMYLIE

BY Lester B. Clark.
ATTORNEY.

Nov. 13, 1945. J. G. SMYLIE 2,388,938

FIRING HEAD FOR GUN PERFORATORS

Filed Aug. 31, 1944 2 Sheets-Sheet 2

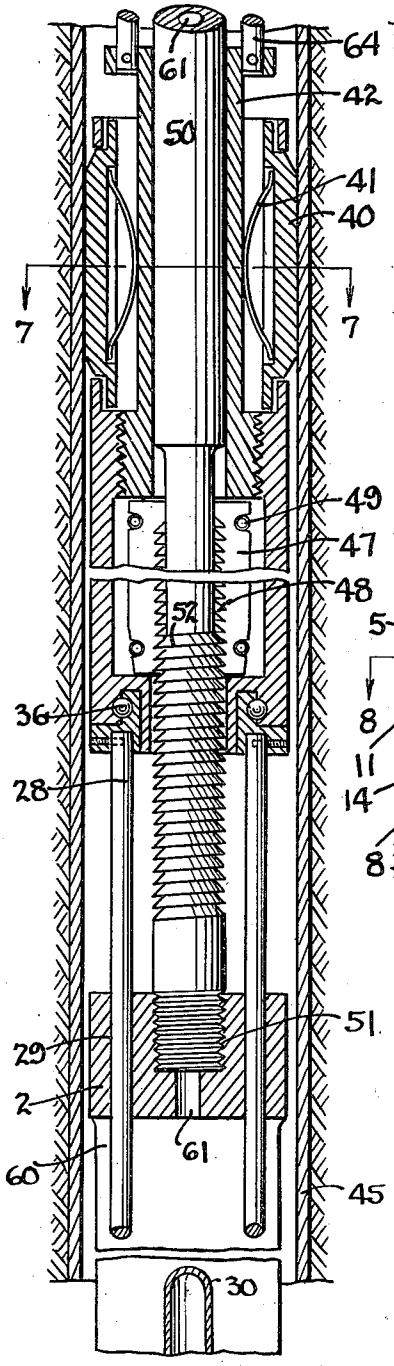

Fig. 5.

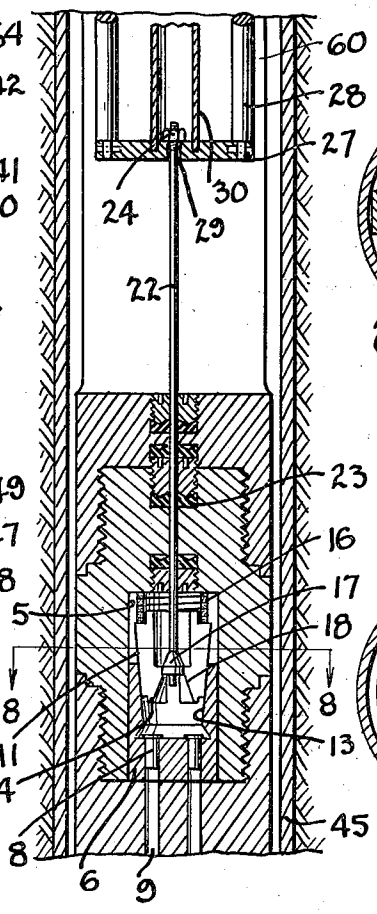

Fig. 6.

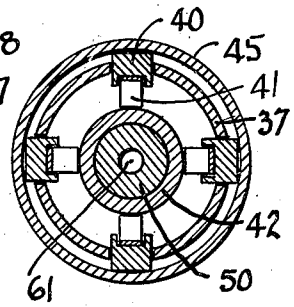

Fig. 7.

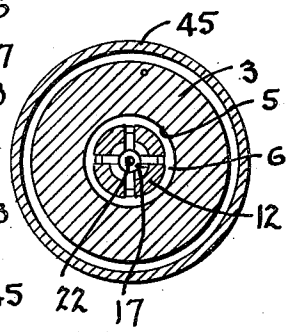

Fig. 8.

INVENTOR.
JAMES G SMYLIE
BY
Lester B. Clark.
ATTORNEY.

Patented Nov. 13, 1945

2,388,938

UNITED STATES PATENT OFFICE

2,388,938

FIRING HEAD FOR GUN PERFORATORS

James G. Smylie, Houston, Tex.

Application August 31, 1944, Serial No. 552,165

14 Claims. (Cl. 164—0.5)

The invention relates to a firing head for gun perforators of the type which are lowered into a well bore in order to perforate a well casing.

Considerable difficulty is encountered with gun perforators due to the fact that they are lowered many thousands of feet into a well bore in the column of liquid in the well and are subjected to the pressure of the static head of such column of liquid. This pressure often affects the firing mechanisms which have been used heretofore and in some instances has caused the premature firing of the gun, thus damaging the well or the firing mechanism has failed to operate when the proper location has been reached.

It is, therefore, one of the objects of the present invention to provide a firing mechanism which is normally locked against operation until the desired elevation has been reached and the tool subjected to a predetermined number of revolutions by rotating the operating pipe on which it is connected, all of which operations must be performed before it is possible to fire the gun.

It is another object of the invention to provide a safety firing head for gun perforators.

Another object of the invention is to provide a firing head for gun perforators for operation upon rotation of the body relative to an anchor disposed in the well bore.

Still another object of the invention is to provide a combination firing head and flow pipe for gun perforators so that the flow of fluid entering the well after the perforations are made can pass upwardly through the firing head to the surface.

A still further object of the invention is to provide a firing head for gun perforators which may remain in the well bore after the perforations are accomplished and serve as a flow pipe for the fluid from the formation.

Still another object of the invention is to provide a firing head which can be utilized to fire a gun perforator and thereafter manipulated to anchor the firing head in the well as a flow head.

Other and further objects of the invention will be readily apparent when the following description is considered in connection with the accompanying drawings wherein:

Fig. 1 is a vertical section of the tool in the position in which it is lowered into the well with the firing mechanism locked against operation.

Fig. 2 is a side elevation of the construction of Fig. 1.

Figs. 3 and 4 are sections taken on the lines 3—3 and 4—4 of Fig. 1 respectively.

Fig. 5 is a vertical sectional view of the tool in the well after having been operated to unlock the firing mechanism and showing the upper portion of the firing head in such position.

Fig. 6 is a sectional view which is a continuation of Fig. 5 and illustrates the firing mechanism about to be released.

Fig. 7 is a section taken on the line 7—7 of Fig. 5.

Fig. 8 is a section taken on the line 8—8 of Fig. 6.

The firing head or tool is made up of a body 2 which has a nipple 3 threaded at 4 in its lower end. This nipple has a recess 5 in which the plug 6 carries a plurality of primers or detonators 8 disposed in position to fire into the conduits or passages 9 which extend down into the gun perforating mechanism not shown. There are preferably four of these detonators, all of which are fired to insure the explosion of the gun perforator.

The plug 6 is formed with a tapered socket or bowl 11 in which the hammers 12 are arranged to seat. These hammers form a circular member having the tapered surfaces 13 thereon to cooperate with the bowl 11. The lower ends of the hammers have a ridge 14 thereon to strike the detonators 8.

These hammers are normally urged toward the detonators by a spring 16 arranged in the recess 5. The hammers, however, are restrained from movement against the detonators by means of the plunger 17 engaging the tapered surfaces 18 on the inner lower portion of the hammers 12. The spring 16 urges all of the hammers downwardly, but they are limited in this movement by abutment against the plunger 17 which preferably bears against the plug 6 at the point 20 so as to insure the locking of the hammers against further downward movement.

This plunger 17 is carried by a rod 22 which extends through a series of packing or stuffing boxes 23 to insure that there will be no leakage into the chamber 5 around the detonators 8. This rod 22 has a nut 24 adjustably arranged on its upper end and the rod passes through the opening 26 in a plate 27 carried by the rods 28 which pass through the openings 29 in the upper portion of the body 2. A cap 30 serves to enclose the upper end of the rod 22 and protect it against injury.

The rods 28 are connected to a collar 35 which is mounted in the anti-friction bearings 36 in the body 37 of a cage 38. This cage has a plurality of slots 39 therein which receive the shoes 40 normally urged outwardly by the leaf springs 41 which in turn bear against the sleeve 42 arranged

on the inside of the cage. These shoes normally bear against the inside of the casing 45 as best seen in the top of Fig. 5.

The inside of this body 37 has the recess 46 therein which carries a split spring ratchet nut 47 having the ratchet threads 48 therein. The two halves of this nut are held together by the springs 49 as best seen in Figs. 1 and 2.

A mandrel 50 is threaded at 51 in the upper end of the body 2 of the firing head, but is both slidable and rotatable in the body 37 of the firing head and the sleeve 42 thereof. This mandrel has ratchet threads 52 thereon to latch the ratchet threads 48 in the nut 47 so that the entire cage 38 may move upwardly relative to the mandrel, or if the cage is held stationary the mandrel will move downwardly with respect thereto. These threads face in one direction, however, so that rotation of the mandrel will cause axial movement in one direction, but a sharp pull on the mandrel in the other direction will cause the threads on the mandrel to slide through the threads on the nut by expanding against the tension of the springs 49 so that the mandrel may be reset or returned to its original position relative to the cage by such a sharp pull.

In actual operation the parts will be assembled as shown in Figs. 1 and 2 and the tool will be lowered into the well bore through the casing 45 to nearly the elevation where the perforating is to be accomplished. In fact it will be lowered so that the bullets to be discharged are probably somewhat above the intended perforation. During this lowering operation the drag shoes 40 will slide along the inside of the casing and when the mandrel is rotated they will tend to hold the cage 38 against rotation. As the rotation proceeds the mandrel 50 and the body 2 will move downwardly as the threads 52 on the mandrel move through the threads 48 in the nut 47 to the position shown in Fig. 5. This relative movement between the body and the cage causes an identical relative longitudinal movement between the plate 27 and the body 2 of the firing head. This movement is sufficient to cause the plate to move against the nut to the position shown in Fig. 6 whereupon continued movement of the cage and the firing head away from each other causes the rod 22 to move relative to the body 2. This movement picks up the hammers 12 due to movement of the plungers 17 and causes the hammers to be lifted against the compression of the spring 16 so as to cock the spring and urge the hammer 12 downwardly.

The hammers are not released, however, until they have been raised sufficiently to expand laterally and permit the plunger 17 to pass upwardly through the tapered area 18 which has become enlarged as seen in Fig. 6.

Only a slight additional movement beyond that shown in Fig. 6 will allow the hammers to slide downwardly around the plunger 17 due to the force of the spring 16 so that they will be snapped against the detonators 8 to effect the firing thereof.

It seems obvious from this arrangement that there can be no accidental or premature firing of the detonators and the operator can obviously set the tool so that he knows the number of rotations of the mandrel 50 which will be required in order to effect the firing of the detonators. In this manner the operator knows precisely when the firing is to take place and he knows that the movement of the parts is such that the bullets will perforate the casing at the intended elevation and that the tool is now in position to receive a flow of fluid from the perforations. Such flow will enter the window 60 in the body 2 and may move into the passage 61 which extends upwardly through the mandrel into the operating pipe which may be a tubing, drill stem or production string of pipe. In this manner a sample of the fluid may be obtained at the surface if desired.

Another feature or combination of the firing head is that the rods 64 connected to the sleeve 42 of the cage may have connected thereto any conventional type of slips or slips and packer so that the firing head may be anchored in the well and form a seal inside of the casing to compel the flow of fluid upwardly through the passage 61 in the mandrel.

The slips may be of a suitable type which can be set by raising up on the mandrel 50 and then setting down the weight of the pipe thereon and the packer may be similarly set as is well understood in the art. The anchoring device has not been shown because they may be any conventional equipment, but the invention contemplates the combination of such slips and packer with the firing head so as to permit the firing of the gun perforator, the sampling of the fluid, or the permanent location of the tool in the well for flowing or pumping purposes.

What is claimed is:

1. A firing mechanism for gun perforators comprising a body, a detonator cap therein, a hammer to strike said cap, spring means to be cocked to snap said hammer, means to retract said hammer against said spring including a rod movable axially to lift said hammer axially, and means movable relative to said body upon rotation of said body relative thereto to release said rod.

2. A firing mechanism for gun perforators comprising a body, a detonator cap therein, a hammer to strike said cap, spring means to be cocked to snap said hammer, means to retract said hammer against said spring including a rod movable axially to lift said hammer axially, and means movable relative to said body upon rotation of said body relative thereto, and additional means to release said hammer after a predetermined movement thereof.

3. A firing head for gun perforators including a body, a cage slidably connected thereto, a mandrel fixed to said body and extending through said cage, a threaded connection between said cage and mandrel so that rotation of the mandrel and body relative to the cage effects sliding movement of the cage, and firing means to be cocked and released by such movement.

4. A firing head for gun perforators including a body, a cage slidably connected thereto, a mandrel fixed to said body and extending through said cage, a threaded connection between said cage and mandrel so that rotation of the mandrel and body relative to the cage effects sliding movement of the cage, and firing means to be cocked and released by such movement, and additional means on the cage to drag on the well casing to hold the cage against rotation.

5. A firing head for gun perforators including a body, a cage slidably connected thereto, a mandrel fixed to said body and extending through said cage, a threaded connection between said cage and mandrel so that rotation of the mandrel and body relative to the cage effects sliding movement of the cage, and firing means to be cocked and released by such movement, said threaded connection including a split spring nut and ratch-

et thread so as to allow return of said mandrel.

6. A firing head for gun perforators including a body, a cage slidably connected thereto, a mandrel fixed to said body and extending through said cage, a threaded connection between said cage and mandrel so that rotation of the mandrel and body relative to the cage effects sliding movement of the cage, and firing means to be cocked and released by such movement, said threaded connection including a split spring nut and ratchet thread so as to allow return of said mandrel to set slips or a packer in the well.

7. A firing head for gun perforators including a body, a cage slidably connected thereto, a mandrel fixed to said body and extending through said cage, a threaded connection between said cage and mandrel so that rotation of the mandrel and body relative to the cage effects sliding movement of the cage, and firing means to be cocked and released by such movement, said mandrel being hollow so as to permit a flow of fluid therethrough which results from the perforation.

8. A firing head for gun perforators including a body, a cage slidably connected thereto, a mandrel fixed to said body and extending through said cage, a threaded connection between said cage and mandrel so that rotation of the mandrel and body relative to the cage effects sliding movement of the cage, and firing means to be cocked and released by such movement, said firing means including a pull rod, firing hammer to be retracted thereby and a spring to be compressed by the retracting hammer.

9. A firing head for gun perforators including a body, a cage slidably connected thereto, a mandrel fixed to said body and extending through said cage, a threaded connection between said cage and mandrel so that rotation of the mandrel and body relative to the cage effects sliding movement of the cage, and firing means to be cocked and released by such movement, said firing means including a pull rod, firing hammer to be retracted thereby and a spring to be compressed by the retracting hammer, and a tapered face on which said hammer slides so as to release for firing after a predetermined movement.

10. A combination firing and flowing head for wells comprising a body, a cage, means to effect relative longitudinal movement of said head and cage to effect firing of a gun perforator, an operating mandrel connected to said body and having a flow passage therethrough to allow flowing of the well after firing of the head.

11. A combination firing and flowing head for wells comprising a body, a cage, means to effect relative longitudinal movement of said head and cage to effect firing of a gun perforator, an operating mandrel connected to said body and having a flow passage therethrough to allow flowing of the well after firing of the head, said cage being adapted for connection to slips and a packer to direct the flow through said mandrel.

12. The combination firing and flowing tool for wells including an operating pipe having a hollow mandrel thereon and a gun perforator firing head body having a passage therein and connected to the mandrel, a cage on the body movable to effect firing of the gun perforator so that fluid may flow through said mandrel and pipe.

13. The combination firing and flowing tool for wells including an operating pipe having a hollow mandrel thereon and a gun perforator firing head body having a passage therein and connected to the mandrel, a cage on the body movable to effect firing of the gun perforator by rotation of the pipe and body relative thereto so that fluid may flow through said mandrel and pipe.

14. The combination firing and flowing tool for wells including an operating pipe having a hollow mandrel thereon and a gun perforator firing head body having a passage therein and connected to the mandrel, a cage on the body movable to effect firing of the gun perforator so that fluid may flow through said mandrel and pipe, and means to anchor and seal said tool in the well bore by manipulation of said pipe and cage after firing.

JAMES G. SMYLIE.