# United States Patent

[11] 3,608,795


[72] Inventors **Bernard W. Klein**
**St. Charles;**
**Sam F. Emma, Geneva, both of Ill.**



[21] Appl. No. **771,781**
[22] Filed **Oct. 30, 1968**
[45] Patented **Sept. 28, 1971**



[73] Assignee **Gunter L. Steves**
**St. Charles, Ill.**
**a part interest**


[54] **BOOT CARRIER**
**5 Claims, 3 Drawing Figs.**


[52] **U.S. Cl.** ..... **224/45 R,** 211/37
[51] **Int. Cl.** ..... **B65d 71/00**
[50] **Field of Search** ..... 224/45 R, 45 S, 45 W; 211/35–38; 12/120.5



[56] **References Cited**

UNITED STATES PATENTS

| | | | |
|---|---|---|---|
| 2,883,688 | 4/1959 | Barreca | 224/45 S X |
| 3,074,085 | 1/1963 | Salzman | 224/45 S X |
| 3,145,402 | 8/1964 | Kaminski | 224/45 S X |
| 3,297,219 | 1/1967 | Selnes | 224/45 S |
| 3,412,866 | 11/1968 | Binding | 211/37 |



*Primary Examiner*—Robert G. Sheridan
*Attorney*—Hibben, Noyes & Bicknell



**ABSTRACT:** This invention is concerned with the structure of a ski boot carrier having a frame of a length greater than the boots and provided with an adjustably mounted cradle on each side at one end to receive and support the heel of a boot and a resilient strap on each side adjacent to the other end to engage over the sole at the boot toe. A carrying handle is at one end.


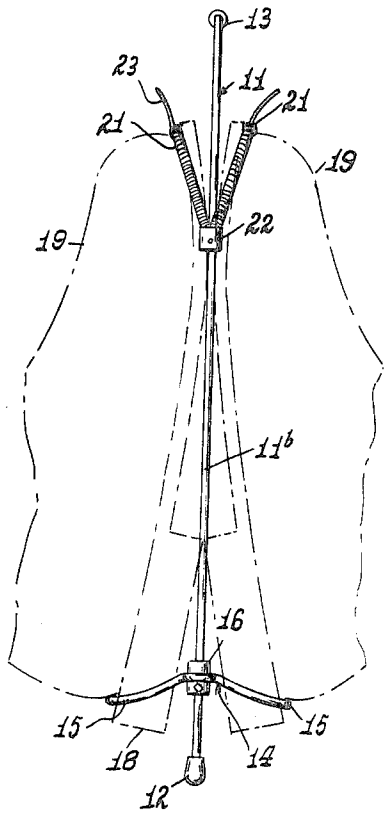

Fig. 1.

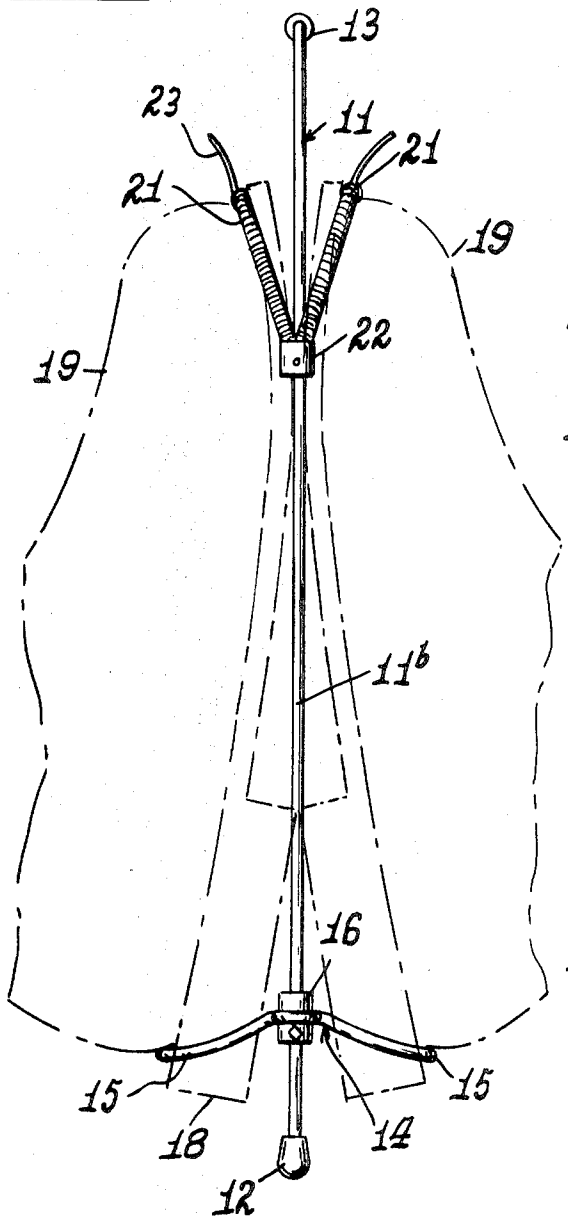


Fig. 2.

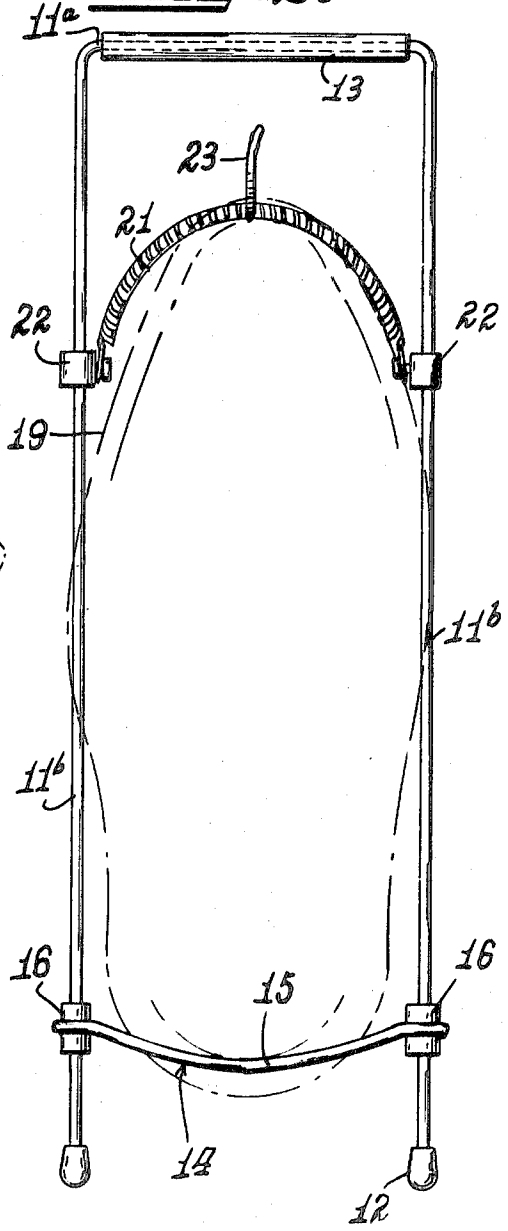


Fig. 3.

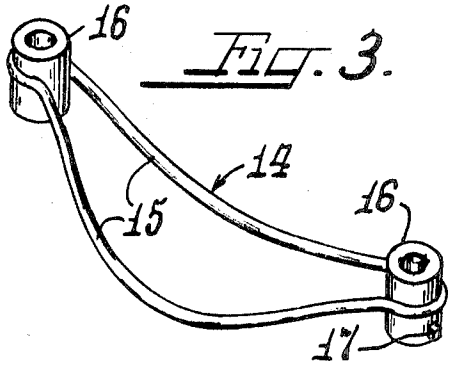


Inventors.
Bernard W. Klein
and Sam F. Emma
by: Charles H. Redman
Atty.

# BOOT CARRIER

The invention relates to a carrying carrier rack embodying means to retain thereon a pair of boots, such as ski boots. The carrier is characterized by an inverted U-shaped frame of rod stock providing a carrying handle at its bight portion and provided adjacent its free ends with a transverse bar assembly or cradle shaped to receive the heels of the boots therein when they are arranged one on each side of the frame. The transverse bar assembly is adjustable along the frame. The toe portions of a pair of boots mounted on the frame are engaged by resiliently yieldable strap members. The boots may be removed manually by disengaging the resilient members therefrom or by inverting the carrier and striking the handle portion against a surface so as to cause the boots to expand the resilient means sufficiently to enable the heel portions to become disengaged from the transverse bar assemblies.

It is, therefore, an object of the invention to provide a boot carrier of the character referred to.

Another object is to provide a boot carrier with one rigid and one resilient element to engage a boot to retain it on the carrier.

Another object of the invention is to provide a boot carrier wherein the means for securing a pair of boots thereto is adjustable to accommodate boots of different sizes.

Another object of the invention is to provide a boot carrier of the character referred to which is not difficult or expensive to manufacture, is simple to use, and very effective in use.

Other objects and advantages of the invention will become apparent with reference to the following description and accompanying drawings.

In the drawings:

FIG. 1 is a side elevational view of the carrier, showing a pair of boots mounted thereon;

FIG. 2 is a front elevational view of the carrier, showing the outline of a boot thereon; and,

FIG. 3 is a detail perspective view of the transverse bar assembly or cradle.

Referring to the exemplary disclosure of the boot carrier illustrated in the accompanying drawings, the boot carrier is comprised of an inverted U-shaped frame **11** having a bight portion **11***a*, and two depending leg portions **11***b*. Each of the free ends of the leg portions preferably has a resilient cap **12** thereon and the bight portion **11***a* preferably has a rubber or plastic sleeve **13** thereon to serve as a carrying handle.

Mounted adjacent to the capped ends of the frame **11** is a transverse bar assembly **14**. This assembly is comprised of a



pair of transverse bars **15** which are suitably connected firmly at their ends to sleeves **16** that are slidably mounted one on each leg portion **11***b*. Set screws **17**, or the like, secure the bar assembly in any position of longitudinal adjustment on said leg portions. Each of the transverse bars **15** is suitably inclined outwardly from the frame **11** and each is bowed downwardly at its center to define a cradle that conforms substantially to the curvature of the rounded back edge of the heel **18** of a boot **19**.

A resilient strap, preferably in the form of a coil spring **21**, is attached at each end to collars **22**, one secured firmly to each of the frame legs **11***b*. When a boot **19** is in place on the frame with its heel portion seated behind one of the transverse bars **15**, the spring **21** is engaged over the welt of the sole across the toe of the boot. This retains the boot in place on the frame and the assembly may be carried by grasping the handle portion **11***a*–**13**.

Preferably, a tab **23** is attached to the spring **21** to facilitate its being engaged and disengaged with the toe of the boot. One manner of quickly disengaging the boots from the frame structure is to turn the assembly over and strike the handle portion **11***a*–**13** sharply against a surface whereupon the weight of the boots will distend the springs **21** sufficiently to permit the heel portions to disengage from the transverse bars **15**, whereupon the boots will fall away from the frame.

We claim:

**1**. A boot carrier comprising an inverted, substantially U-shaped frame having a bight portion and a transversely spaced depending leg portion, a pair of resilient straps extending between and connected at their ends to the leg portions of said frame and adapted to engage and retain the toe portions of an associated pair of boots, and a unitary transverse bar assembly connected to and extending between the leg portions of said frame and adapted to engage and support the heel portions of said associated pair of boots.

**2**. The boot carrier recited in claim **1**, in which said resilient straps comprise a pair of coil springs.

**3**. The boot carrier recited in claim **1**, in which said transverse bar assembly comprises a pair of integrally connected transverse bars bent to define a pair of cradles respectively adapted to engage and support said heel portions.

**4**. The boot carrier recited in claim **3**, in which said transverse bars are connected at their ends to collars slidably adjustable on the leg portions of said frame.

**5**. The boot carrier recited in claim **3**, in which said frame and said transverse bars are of rodlike material.