May 7, 1929. L. D. TATRO 1,711,620

LASTING MACHINE

Filed Dec. 18, 1922

Fig. 5.

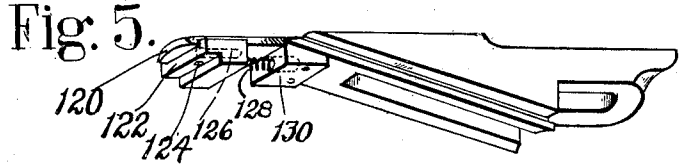

Fig. 1.

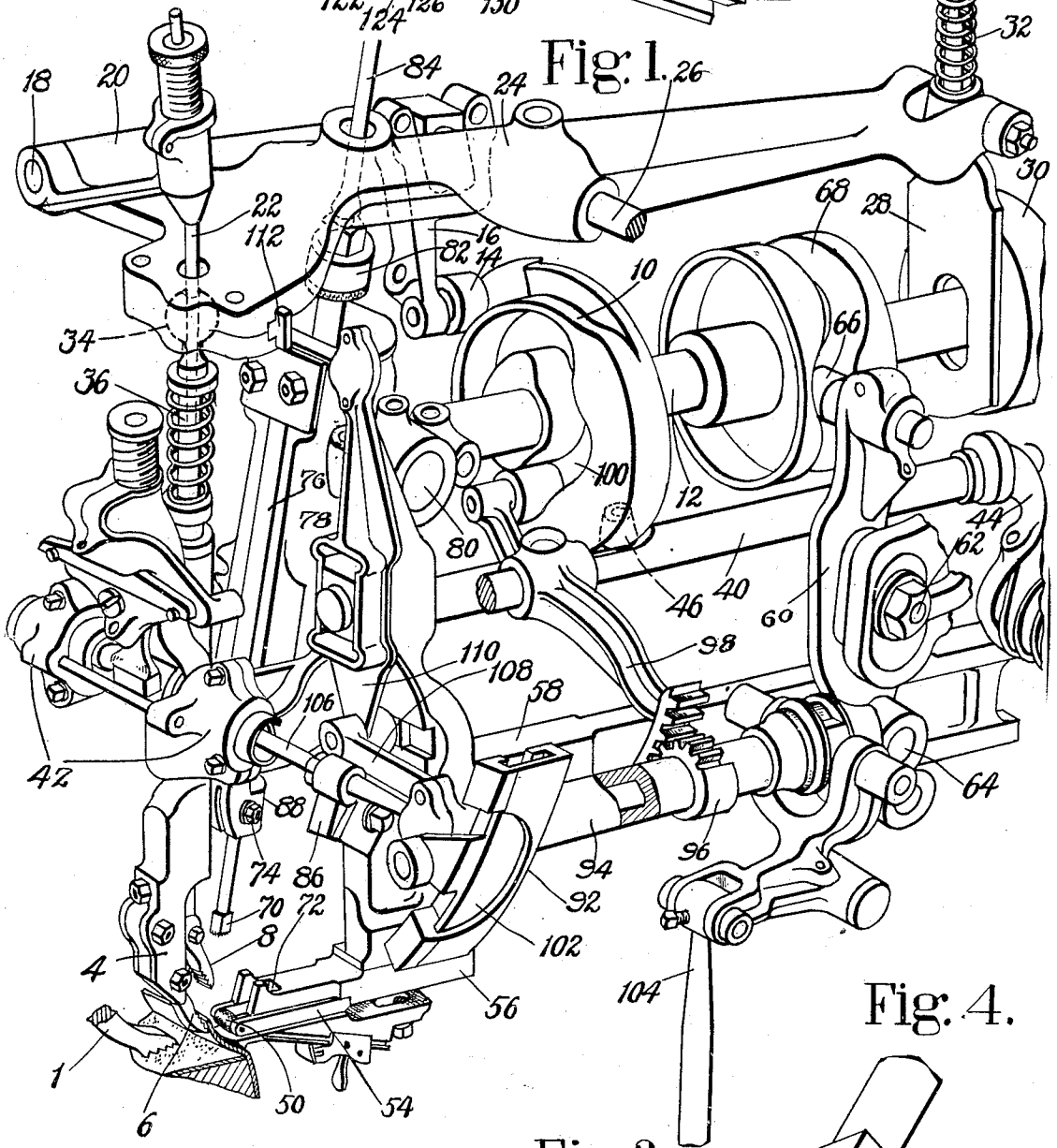

Fig. 4.

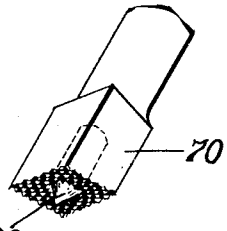

Fig. 2.

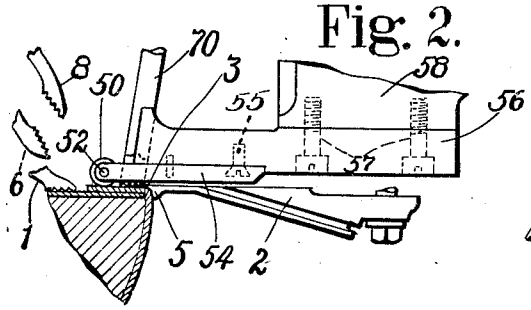

Fig. 3

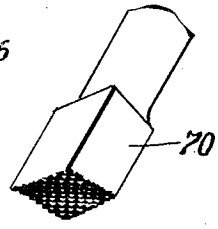

INVENTOR.
Louis D. Tatro
By his Attorney,
Nelson M. Howard

Patented May 7, 1929. 1,711,620

UNITED STATES PATENT OFFICE.

LOUIS D. TATRO, OF SALEM, MASSACHUSETTS, ASSIGNOR TO UNITED SHOE MACHINERY CORPORATION, OF PATERSON, NEW JERSEY, A CORPORATION OF NEW JERSEY.

LASTING MACHINE.

Application filed December 18, 1922. Serial No. 607,561.

This invention relates to machines for working uppers over lasts. The invention is herein illustrated as embodied in a machine for progressively lasting the uppers of boots and shoes and is particularly adapted for use in the manufacture of a type of shoe in which the upper is secured to the innersole in lasted position by adhesion. It is to be understood, however, that in certain features and aspects the invention is not limited to machines for operating upon this particular type of shoe.

Well-known examples of shoes of the type mentioned are the so-called sneakers and tennis shoes which usually comprise an upper of textile material and a sole of rubber or other composition. In the manufacture of these shoes it is common practice to utilize an innersole of such a character as to material and thickness that it is comparatively yielding to any pressure such as might tend to distort it, the innersole being frequently made of so-called "rag stock" comprising a mixture of unvulcanized rubber and scraps of cloth or other waste material. Both the innersole and the margin of the upper are coated with cement or, alternatively, the cement is applied to one of these parts alone, and in the lasting of the shoe the margin of the upper is pressed against the innersole to render the cement effective to hold the upper in position. Subsequently an outersole is cemented to the shoe and the shoe vulcanized.

Heretofore, in the manufacture of such shoes, the lasting operation has been usually performed manually, the workman grasping the upper in his hands and pulling it to the shape of the last and then pressing the margin of the upper into position to adhere to the innersole. Such hand lasting, however, is unsatisfactory because of the inability of the operator consistently to apply sufficient force to the upper to shape it properly to the last. It is very difficult also for a workman, by the use of his fingers, to shape the upper smoothly about the periphery of the last and to apply sufficient force to the overlaid margin to cause it firmly to adhere to the innersole. This is particularly true when lasting around the ends of the last where it is difficult or impossible for the workman to avoid the formation of wrinkles along the bottom edge of the shoe. Still another very important objection to hand work is the labor cost.

Notwithstanding these objections to the employment of hand labor in the lasting of these shoes, existing machines such as are used for working uppers over lasts in the manufacture of other types of shoes have been found ill adapted for the manufacture of shoes of this particular character. Such machines are designed to operate upon shoes having innersoles of such material and thickness that they are comparatively firm against any pressure tending to distort them, and where the innersole is readily yieldable, as in the type of shoe above mentioned, the tendency is for the margin of the innersole to be displaced and for the innersole to be wrinkled on the bottom of the last in the overlaying operation of the inwardly directed wiping pressure. Such machines, moreover, are usually designed for securing the upper to the innersole at separated points by fastenings such as tacks, and are not adapted to force the margin of the upper firmly and uniformly into position to adhere to the innersole along the entire edge of that portion of the shoe upon which the work is performed. It is one object of this invention to provide a machine for working uppers over lasts which will be better adapted for use in the manufacture of sneakers or tennis shoes or other shoes in which the margin of the upper is secured in overlaid position by adhesion than lasting machines as heretofore organized.

Important features of the invention reside in a novel organization comprising upper pulling means, such as a gripper, and overlaying means constructed to lay the margin of the upper over the innersole by rolling pressure, together with means for forcing the overlaid portion by impact against the innersole to secure firm and permanent adhesion between the upper and innersole. As applied to the manufacture of the type of shoe in which the innersole is comparatively soft and yielding, the use of rolling pressure to lay the margin of a tensioned upper over the innersole has the important advantage that danger of distorting the innersole, or portions of it, is practically eliminated, and the delivery of a blow directly upon the portion of the upper which has been acted

upon by rolling pressure while the inner portion of that margin is still subjected to such pressure insures firm adhesion of the upper to the innersole without any possibility of its drawing back before such adhesion is secured. As shown herein, a gripper is provided for progressively tensioning successive portions of the upper about the periphery of the shoe, and while each portion of the upper is held under tension a roll is moved substantially in the plane of the shoe button to engage the tensioned upper and roll it down into engagement with the margin of the innersole. After the roll has completed its inward movement a hammer is caused to descend behind the roll to deliver a blow to the portion of the upper which has just been rolled against the shoe bottom and cause firm and permanent adhesion of the upper and innersole. The hammer is then withdrawn, the roll retracted, the shoe moved along a step, an adjacent portion of the upper seized by the gripper, and the operation repeated step by step upon successive portions of the upper about the periphery of the shoe. The acting face of the hammer is preferably roughened or knurled in order to force separate strands of the fabric upper into the cemented surface and soft body portion of the innersole. Under some conditions, where still firmer adhesion between the upper and innersole is necessary or desirable, the acting face of the hammer may be provided with a projection or projections such, for example, as the conical projection shown, which will force a localized portion of the fabric upper into the body of the cemented rag stock innersole to form on the upper a projecting portion entering the body of the innersole to assist the adjacent cemented and impacted portions in holding the upper in lasted position.

Another feature of the invention consists in a novel combined height and edge gage by the use of which the operator is able to locate the edge corner of the shoe quickly and certainly for the operation of the machine by simply positioning the edge corner of the shoe in a notch formed in the front end of the gage. The gage may comprise a thin lip arranged to engage the upper and crowd it slightly over the margin of the bottom of the innersole sufficiently to enable the lip to locate the shoe edge heightwise for the action of the roll and other operating instrumentalities upon the upper. Just back of the lip is a block or abutment to engage the side of the last and locate the shoe laterally, the lower face of the lip and the front face of the block constituting a notch or angle for locating the shoe edge vertically and laterally. At certain portions of the periphery of the shoe, at the shank for instance, the last projects outwardly beyond the edge of the innersole, and the lip can not, if the abutment is fixed, reach over the edge of the innersole because of engagement of the abutment with the side of the last. Accordingly it is preferable to arrange the abutment for movement rearwardly with respect to the lip to allow further projection of the lip over the shoe with respect to the side of the last. The abutment may be arranged, as shown, to yield rearwardly against a spring in response to pressure of the shoe against it so that the lip and abutment are relatively movable to meet different conditions met with about the periphery of the shoe, the angle between the lip and abutment providing, however, at all times a notch in which the edge corner of the shoe is located. The operator, by locating the edge corner of the shoe in the notch, is able to sense that the shoe is properly located for the operation of the machine, and when the abutment is arranged to move backwardly against a substantial yielding resistance, is able to use his judgment according to conditions and to apply additional lateral pressure to the shoe to displace the abutment and cause the lip to project in proper relation to the edge of the innersole and thereby bring the upper into position to be seized by the gripper and laid into position by the roll and beaten down by the hammer. This construction renders the gage self-adapting to the different conditions met with at different parts of the periphery of the shoe, thus enabling the operator to last a shoe all the way round without making any time-consuming adjustments or changing from one gage to the other as the lasting progresses from the side portion of the shoe to the end portion or vice versa.

These and other features of the invention will appear more clearly from the following detailed description when read in connection with the accompanying drawing and will be pointed out in the appended claims.

In the drawing,

Fig. 1 is a perspective of the operating mechanism of a machine embodying this invention;

Fig. 2 is a detail in side elevation of the operating instrumentalities in one of their positions, a fragment of the shoe operated upon being shown in section;

Fig. 3 is a perspective view of the end portion of the hammer by which the upper is forced down against the shoe bottom;

Fig. 4 is a modified form of the hammer in which the operating face is provided with a conical projection; and

Fig. 5 is a view of an improved form of edge gage which may be used in place of that shown in Figs. 1 and 2.

The construction and organization of the machine in general may be that of a machine of the usual hand method type such, for example, as that disclosed in United States

Letters Patent No. 584,744, granted June 15, 1897, upon application of Ladd and McFeely, to which patent reference may be had for disclosure of such details of the machine as are not herein fully described.

A bottom rest 1 is provided to engage the bottom of the shoe and give the shoe its general vertical position, as is usual in machines of this type. The edge corner of the shoe where the lasting operation is taking place is located by an edge gage 2 secured to the frame of the machine and having its outer end portion formed as a lip 3 to locate the shoe edge vertically and to push the upper into position to be seized by a gripper 4. On the gage 2, just back of the lip 3, is a block or abutment 5 having a substantial but slight vertical extent to engage the side of the last and locate the shoe laterally, the lip 3 and abutment 5 forming between them an angle or notch for locating the edge corner of the shoe vertically and laterally for the operating instrumentalities of the machine. The gripper 4, which may be of the usual construction in machines of this type, comprises jaws 6 and 8 which are relatively moved to grip the margin of a shoe upper. As shown, the jaw 8 is moved downwardly toward the jaw 6, being operated by an edge cam 10 on the main cam shaft 12 of the machine, this cam operating upon a roll 14 carried by an arm 16 on a rock-shaft 18 upon which is an arm 20 arranged to thrust downwardly through suitable yielding mechanism upon a vertically movable stem 22 connected with the movable jaw 8. The rock-shaft 18 is mounted upon an updraw lever 24 pivoted at 26 upon the machine frame and having connected thereto at its rear end a slide 28 which is operated vertically by a cam 30 on the cam shaft 12. Movements of the slide 28 are communicated to the lever 24 through a spring 32. At its forward end the lever 24 has ball-and-socket connection at 34 with a sleeve portion 36 of the gripper to which the jaw 6 is secured. Beside the closing and updraw movements of the gripper, effected by the cams 10 and 30 respectively through the mechanism described, the gripper is given a movement inwardly over the shoe bottom to overdraw the upper. The overdraw movements of the gripper are effected by the overdraw rod 40 which, at its forward end, carries a yoke 42 connected with the shank 36 of the gripper and at its rear end is impelled in a direction to move the gripper over the shoe bottom by a spring actuated arm 44. Movements of the rod 40 in the opposite direction against the spring arm 44 are effected by the rear face of the cam 10 acting upon a roll 46 mounted upon the rod 40. The movements of the rod 40 are so timed by its actuating cam that the overdraw movement occurs after the upper has been tensioned and cause the gripper to hold the upper in an inclined position over the shoe bottom but out of substantial contact with the top face of the innersole.

After a portion of the upper has been thus tensioned and positioned with respect to the surface of the innersole, the inwardly disposed portion of the upper extending above the edge of the innersole is laid into contact with the innersole progressively from the edge of the sole inwardly by the action of a roll 50. The roll moves in a path substantially parallel to the shoe bottom and the shoe is upheld by the operator so as to secure the proper rolling pressure of the roll during its movement inwardly of the shoe bottom. Preferably, at least a portion of the action of the roll upon the upper to force it against the shoe bottom occurs before the gripper 4 has released the upper. As soon, however, as the roll 50 assumes control of the tensioned stock and is acting to lay it against the shoe bottom, the gripper may be released and the action of the roll continued to lay the entire margin of the upper into adhering relation to the shoe bottom. It is to be understood, of course, as above stated, that the engaging surfaces of the upper and innersole are either cemented or are of such character or material that they adhere to each other as soon as they are brought into actual contact, the strength of the adhesion depending largely upon the force with which they are pressed together. The roll 50 has a pivot pin 52 the ends of which are mounted in the forks of a forked plate 54 secured at 55 to another plate 56 which, in turn, is secured at 57 to a slide 58. The slide 58 is arranged for horizontal movement in the frame of the machine and is operated by a lever 60 fulcrumed at 62 to the frame and pivoted to the slide at 64 and having on its opposite end a cam roll 66 which engages a path cam 68 on the shaft 12. The operating surface of the roll may be smooth or knurled, as shown.

In order to secure firm and permanent adhesion of the tensioned and overlaid upper to the innersole it is necessary to subject it to more pressure than can conveniently be applied by the roll and preferably this pressure is applied directly to that portion of the upper which has just been laid into contact with the sole by the action of the roll and while the roll is still in contact with the inner portion of the margin of the upper. For effecting this direct pressure a blow is more effective and desirable than less sudden pressure, not only because firmer adhesion of the upper and innersole is thereby secured, but also because the shoe is upheld in the hands of the operator and a quick blow is partly withstood by the inertia of the shoe just as the blow of the tack driver is withstood in the operation of usual lasting machines of this type. Accordingly a ham-

mer 70 is arranged to descend behind the roll 50 into direct contact with the upper and acts to force each overlaid portion of the upper into firm and permanent adhesion with the innersole. The forked formation of the plate 54, together with a recess 72 formed in the forward end of the plate 56, affords an opening through which access may be had to the portion of the upper which has been treated to rolling pressure by the roll 50. When the roll and its carrier move forward over the shoe bottom this opening is located beneath the hammer 70 which is then moved downwardly through the opening into contact with the overlaid upper as shown in Fig. 2. The hammer 70 is secured at 74 to a bar 76 arranged to slide in a carrier 78 which is pivoted to the machine frame at 80. The bar 76 has a head 82 which, by contact with the carrier 78, limits the downward movement of the bar 76 and hammer 70. The bar 76 is actuated by a connection through a link 84 with a spring actuated arm similar to that used in machines of this type for operating the driver, as will be readily understood. As the slide 58 moves forwardly a surface 86 on the slide engages a rear face 88 of the bar 76 and swings it and its carrier 78 on the pivot 80 so as to effect proper alinement of the hammer 70 with the recess 72 and the opening behind the roll 50 through which the hammer operates. As clearly shown, the direction of the hammer stroke is downwardly and inwardly with respect to the shoe bottom so that the blow is delivered with a slight component of movement inwardly of the shoe bottom to tighten the upper and avoid any tendency of the blow to loosen the tensioned upper along the side of the shoe. Because of the angular movement of the hammer its operating face, as shown in Fig. 2, is inclined to its direction of movement so that the operating face of the hammer will squarely engage the overlaid upper. From Fig. 3 it will also be seen that the acting face of the hammer is toothed or knurled, such an operating face having been found to be more effective in operating upon upper stock such as fabric, the projections on the face acting to force the fibers of the fabric more firmly into the cement and secure firm adhesion of the parts. For certain work a hammer face of the form shown in Fig. 4 has been found more effective, the face in this case being provided with a conical projection 90 which acts to displace a portion of the fabric upper down into the body of the innersole so that the displaced portion acts somewhat as a peg to take the strain from the surrounding portions secured by the cement alone. To raise the hammer against its operating spring there is a cam on the shaft 12 similar to the usual driver cam for raising the bar 76 and releasing it in proper timed relation to the other operating instrumentalities of the machine.

The machine as shown is provided with the usual mechanism for effecting the plaiting movements of the gripper comprising a rocker 92 mounted on a sleeve 94 carrying a pinion 96 which is operated through a segment lever 98 by a cam path 100 formed in the front face of the cam 10. In the rocker 92 is a slide 102 the position of which with respect to the center of oscillation of the rocker may be changed by the operator through a knee lever connected with a rod 104. The movements of the rocker 92 are communicated through a rod 106 to effect lateral movements of the gripper 4 when desired, and are communicated through a link 108 and a lever 110 to a slide 112 which is geared to the shank 36 of the gripper to impart thereto a twisting movement in either direction, the direction depending upon whether the operator has set the slide 102 above or below the center of oscillation of the rocker 92. This mechanism will be found more fully described in the patent above referred to. It is to be understood, of course, that the plaiting movements of the gripper may be brought into action whenever the contour of the portion of the shoe being lasted renders their action desirable, and that they are practically indispensable in operating at the toe in order properly to dispose of the fulness of the upper which occurs at this portion of the shoe.

In Fig. 5 is shown a form of combined height and edge gage which may be used in place of the form shown in Figs. 1 and 2. This form, while retaining all the advantages of the form above described, has the further advantage that the edge gage portion is displaceable relatively to the height gage portion so that the height gage may extend farther inwardly with respect to the edge of the last, and performs its function of pushing the upper forwardly into position to be seized by the gripper and slightly over the upper marginal portion of the innersole. As shown, the edge rest comprises a thin tongue 120 the end of which constitutes a lip for locating the edge contour of the shoe vertically. On the tongue 120 is mounted a block 122 so that it can slide freely toward and from the shoe, its forward movement being limited by a stop pin 124 which engages the end of a slot 126 in the tongue. The block 122 is maintained normally in its forward position by a fairly stiff spring 128 having its ends seated in recesses formed respectively in the block 122 and in the stationary portion 130 of the gage. This form of gage normally presents, as shown in Fig. 5, a notch between the lower face of the tongue 120 and the front face of the block 122 by which the edge corner of the shoe may be located vertically and

laterally. When, however, a portion of the shoe is reached such as the shank, where the line of the last projects outwardly beyond the edge of the innersole, the operator, by pressing inwardly upon the shoe, may displace the edge gage portion or block 122 rearwardly and cause the end of the tongue 120 to continue its function of pressing the margin of the upper in over the edge of the innersole and into position to be seized and further treated by the lasting instrumentalities.

Having thus described my invention, what I claim as new and desire to secure by Letters Patent of the United States is:

1. A machine of the class described having, in combination, means for pulling an upper over a last, means constructed and arranged to assume control of the tensioned upper and to apply rolling pressure to a portion of the margin of the upper to lay it in position to adhere to an innersole on the bottom of the last, and means for impacting the said portion of the overlaid upper to cause firm adhesion between it and the innersole.

2. A machine of the class described having, in combination, means for pulling an upper over a last, means constructed and arranged to assume control of the tensioned upper and to apply rolling pressure to the margin of the upper to lay it in position to adhere to an innersole on the bottom of the last, means for directly engaging the portion of the upper which has been overlaid by rolling pressure, and means for causing said directly engaging means to treat the upper by impact.

3. A machine of the class described having, in combination, means for pulling an upper over a last, means constructed and arranged to assume control of the tensioned upper and to apply rolling pressure to the margin of the upper to lay it in position to adhere to an innersole on the bottom of the last, a hammer arranged to engage the portion of upper over which the rolling means has passed, and means for actuating the hammer.

4. A machine of the class described having, in combination, a gripper for tensioning successive portions of an upper over a shoe bottom, a roll acting to lay the tensioned portion of upper in contact with the shoe bottom, and a hammer actuated to engage by impact the portion of upper treated by the roll.

5. In a machine of the class described, the combination of a gripper, a roll, a hammer, and means for actuating said elements in succession in the order named to tension, roll and pound each portion of successive portions of an upper about the periphery of a shoe.

6. In a machine for operating step by step on successive portions of an upper about the periphery of a shoe, the combination of a gripper to updraw and overdraw a portion of the upper, a roll for rolling down the gripper treated portion of the upper into contact with the innersole, and means for directly engaging by impact the rolled over portion while the roll is in engagement with the inner margin of the rolled down portion.

7. A machine of the class described having, in combination, a gripper for working successive portions of an upper over a last, a reciprocating roll constructed and arranged to assume control of the upper while still held by the gripper and to apply rolling pressure to the margin of the upper to lay it in position to adhere to an innersole on the bottom of the last, and a hammer acting to beat the overlaid upper to cause firm adhesion between it and the innersole.

8. A machine of the class described having, in combination, means for pulling an upper over a last, means constructed and arranged to assume control of the tensioned upper and to apply rolling pressure to the margin of the upper to lay it in position to adhere to an innersole on the bottom of the last, and a reciprocating hammer having a knurled face for directly engaging the overlaid upper and indenting it to augment the adhesion.

9. A machine of the class described having, in combination, means for pulling an upper over a last, means constructed and arranged to assume control of the tensioned upper and to apply rolling pressure to the margin of the upper to lay it in position to adhere to an innersole on the bottom of the last, a hammer having an acting face to engage the portion of upper over which the rolling means has passed, and means for guiding and actuating the hammer to give its face a component of movement inwardly of the shoe.

10. In a machine of the class described, means for working an upper over an innersole upon a last, and a hammer arranged to engage the overworked upper, said hammer having an isolated projection on its working face to force the material of the upper into the material of the innersole.

11. A machine of the class described having, in combination, a gripper for tensioning successive portions of an upper over a shoe bottom, means for laying the tensioned portion of upper in contact with the shoe bottom, a hammer actuated to engage by impact the overlaid portion of upper, and a large central projection on the face of the hammer acting to indent the upper into the body of the innersole.

12. In a machine of the class described, means for working an upper over an innersole upon a last, and a hammer having a

face of substantial extent arranged to engage the overworked upper and effect adhesion of the upper and innersole, said hammer having on its acting face a centrally located projection to force a localized portion of the upper into the body of the innersole to assist the adhesion of the surrounding portions in holding the upper in lasted position.

13. In a machine for operating step by step on successive portions of an upper about the periphery of a shoe, the combination of a gage having a notch to receive an edge corner of the shoe to locate the shoe vertically and laterally and to press a portion of the upper against the side of the last and over the innersole, a gripper to updraw and overdraw the said portion of the upper, and means for laying the tensioned portion of the upper into contact with the innersole.

14. In a lasting machine, a combined height and edge gage for the edge corner of a shoe, the edge gaging portion of the gage being displaceable in response to pressure of the shoe to allow the height gaging portion to protect farther beyond the line of the last and to press the upper into engagement with the upper marginal face of the innersole.

15. In a machine of the class described, means for progressively working an upper over a shoe bottom, a gage for locating the shoe with respect to the overworking means, said gage comprising a lip to press the upper over the edge of the innersole, and a block arranged to move rearwardly with respect to said lip and spring-held toward the shoe to constitute a vertical abutment to engage the side of the shoe, the said block being adapted to be pushed back by pressure of the shoe at times to allow the lip to reach in over a projecting portion of the last and dispose the upper in proper relation to the edge of the innersole.

16. An edge gage for lasting a shoe comprising a stationary lip presenting a vertically thin end face for pressing the upper inwardly and a bottom face to press the upper against the innersole close to the edge of the innersole, an abutment movable beneath the bottom face of the lip, a spring for moving the abutment toward the shoe, and a stop for limiting movement of the abutment when it is positioned a short distance rearwardly from the end face of the lip, the said abutment being displaceable by the shoe when working upon those portions of the shoe where the contour of the last is such that the abutments must be pushed back to allow the edge face of the lip to hold the margin of the upper in beyond the edge face of the innersole.

17. In a lasting machine, a gripper for tensioning successive portions of an upper, means for imparting plaiting movements to the gripper, means for applying rolling pressure to the portion of upper treated by the gripper, and means for forcing the rolled over portion into intimate contact with the innersole.

18. In a lasting machine, a gripper operated to updraw and overdraw a portion of the shoe upper, means under control of the operator for imparting lateral and turning movements to the gripper to plait the upper, means for applying rolling pressure to the tensioned portion of the upper to lay it over upon the innersole, and means acting by impact to force the overlaid portion against the innersole.

In testimony whereof I have signed my name to this specification.

LOUIS D. TATRO.

CERTIFICATE OF CORRECTION.

Patent No. 1,711,620. **Granted May 7, 1929, to**

LOUIS D. TATRO.

It is hereby certified that error appears in the printed specification of the above numbered patent requiring correction as follows: Page 2, line 12, for the word "button" read "bottom"; page 6, line 25, claim 14, for the word "protect" read "project"; and that the said Letters Patent should be read with these corrections therein that the same may conform to the record of the case in the Patent Office.

Signed and sealed this 13th day of May, A. D. 1930.

M. J. Moore,
Acting Commissioner of Patents.

(Seal)

CERTIFICATE OF CORRECTION.

Patent No. 1,711,620. Granted May 7, 1929, to

LOUIS D. TATRO.

It is hereby certified that error appears in the printed specification of the above numbered patent requiring correction as follows: Page 2, line 12, for the word "button" read "bottom"; page 6, line 25, claim 14, for the word "protect" read "project"; and that the said Letters Patent should be read with these corrections therein that the same may conform to the record of the case in the Patent Office.

Signed and sealed this 13th day of May, A. D. 1930.

M. J. Moore,
Acting Commissioner of Patents.

(Seal)