April 28, 1970 SUKENAO YOSHIDA ET AL 3,508,451

DRIVING MECHANISM FOR SLIDE IN A PRESS

Filed Aug. 9, 1968 2 Sheets-Sheet 1

Fig. 1

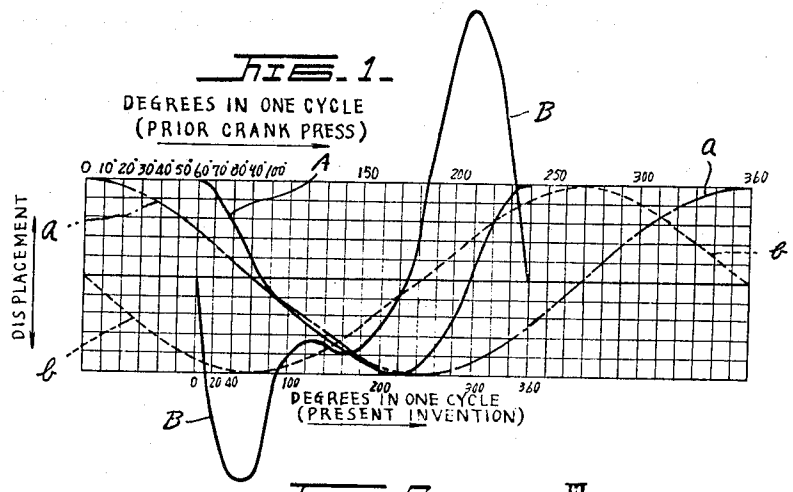

Fig. 2

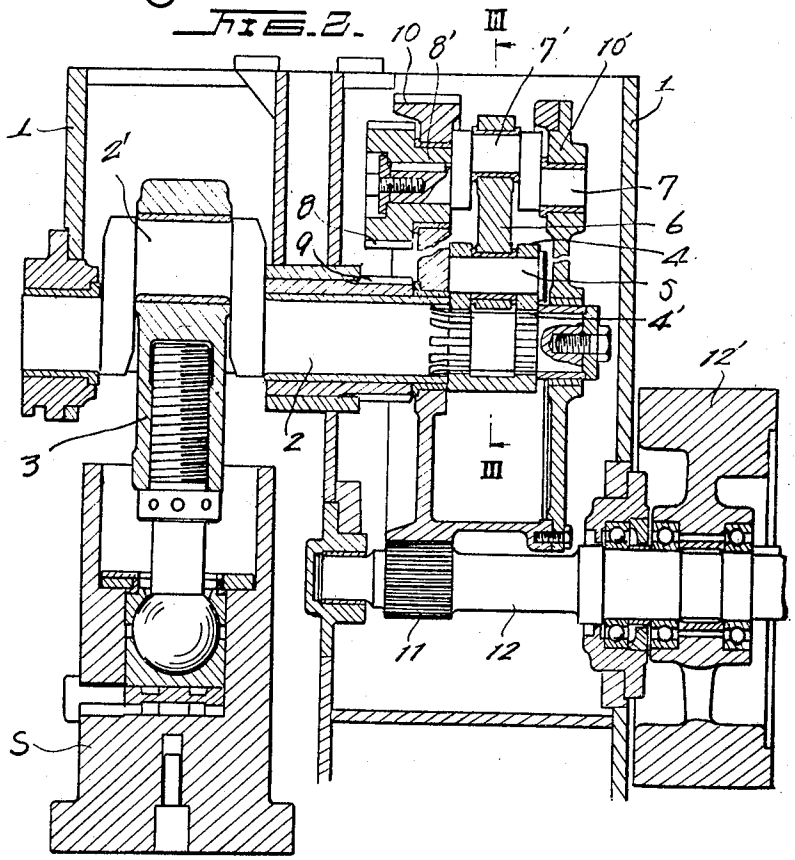

April 28, 1970 SUKENAO YOSHIDA ET AL 3,508,451

DRIVING MECHANISM FOR SLIDE IN A PRESS

Filed Aug. 9, 1968 2 Sheets-Sheet 2

FIG. 3.

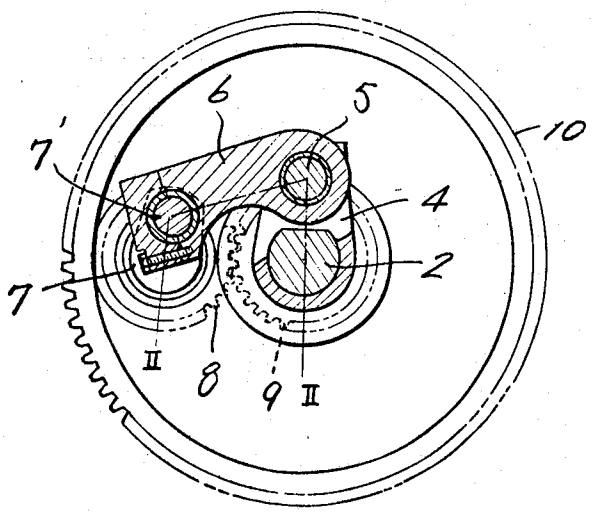

United States Patent Office 3,508,451
Patented Apr. 28, 1970

3,508,451

DRIVING MECHANISM FOR SLIDE IN A PRESS

Sukenao Yoshida, Tokyo, and Kohji Nakano, Sagamihara-shi, Japan, assignors to Kabushiki Kaisha Aida Tekkosho, Sagamihara-shi, Kanagawa-ken, Japan

Filed Aug. 9, 1968, Ser. No. 751,504
Claims priority, application Japan, Aug. 11, 1967, 42/51,248
Int. Cl. F16h 35/02, 3/44
U.S. Cl. 74—394 5 Claims

ABSTRACT OF THE DISCLOSURE

A driving mechanism for the slide in a press comprising a slide driving main gear freely mounted on a main crank shaft journalled in the frame of said press, a drive gear fixedly mounted on a main drive shaft and in engagement with said main gear, an auxiliary crank shaft journalled in said main gear, a planetary gear fixedly mounted on said auxiliary crank shaft and a sun gear fixedly supported in said frame in a concentric relation to said main crank shaft and in engagement with said planetary gear, said auxiliary crank shaft having a crank pin which is connected through a link to the fixed arm of said main crank shaft.

BACKGROUND OF THE INVENTION

The stroke curve of the slide in a prior art press is a curve which is similar to a cosine curve and the descending velocity of the slide is the highest in the center of the stroke curve. In a conventional drawing-type press, when the rate at which a material is drawn into a product increases over a predetermined value the material is usually adversely affected and in some cases, the material can not be processed into a desired product. Therefore, the material drawing rate by such a prior art press is inevitably limited within a relatively low value range. Thus, the prior art press has to be necessarily so designed that the number of strokes of the slide per minute is determined depending upon the length of the stroke of the slide movement in a cycle of operation and the number of strokes of the slide per minute is increased only by causing the slide to move describing a non-cosine curve in which the velocity of the slide is increased both in a stroke portion descending from the upper dead point to a point adjacent to the middle in its descending stroke and in the non-productive stroke portion ascending from the lower dead point to the upper dead point.

SUMMARY OF THE INVENTION

The present invention relates to an improved driving mechanism for the slide in a press and more particularly, to an improved driving mechanism for the slide in a press for sheet metal in which the driving mechanism drives the slide toward a material to be processed at a high velocity and also to return the slide at a similarly high velocity after the performance of processing upon the material by the die carried in the slide at a low rate.

One object of the present invention is to provide an improved driving mechanism for the slide in a press whereby the number of strokes of the slide per minute can be substantially increased while maintaining the processing rate of the press at a predetermined constant value.

Another object of the present invention is to provide an improved driving mechanism for the slide in a press whereby the setting of various different stroke lengths can be more easily made as compared with the setting by the prior art quick returning mechanism.

A further object of the present invention is to provide a simplified and compact driving mechanism for the slide in a press.

According to the present invention, there is provided a driving mechanism for the slide in a press comprising a main crank shaft rotatably journalled in the frame of said press for driving said slide, a main gear freely mounted on said main crank shaft, a driving shaft journalled in said frame and having a fixed drive gear in engagement with said main gear for driving the latter, an auxiliary crank shaft journalled in said mean gear, a planetary gear fixedly mounted on said auxiliary crank shaft and a sun gear fixedly supported in said frame in a concentric relation with said main crank shaft for engagement with said planetary gear, a crank pin of said auxiliary crank shaft being connected by means of a link to a fixed arm of said main crank shaft.

The above and other objects and attendant advantages of the present invention will be more readily apparent to those skilled in the art from the following description when read in conjunction with the accompanying drawings.

BRIEF DESCRIPTIONS OF THE DRAWINGS

FIG. 1 is a graph which compares the novel slide driving mechanism with a prior art slide driving mechanism by graphically showing the curves of the slide displacement and velocity characteristics obtained by both the novel and prior art slide driving mechanisms respectively;

FIG. 2 is a fragmentary vertical section view of essential parts of a preferred form of press slide driving mechanism constructed in accordance with the present invention showing a portion thereof in section taken along the line II—II of FIG. 3; and

FIG. 3 is a cross-section view taken along the line III—III of FIG. 2.

Referring to FIG. 2 of the accompanying drawings in which a preferred form of press slide driving mechanism by the present invention is shown as being incorporated in a press for driving the slide of the press, the press generally comprises a machine frame **1** in which a main crank shaft **2** is rotatably mounted in a conventional manner by means of conventional bearings and the crank shaft has a crank pin **2'** which is connected through a conventional connecting rod **3** to a conventional slide S which carries die therein (not shown) in a conventional manner. The crank shaft **2** further has an arm **4** connected thereto by means of a spline arrangement as shown at **4'**. The free end of the arm **4** has one end of a link **6** connected thereto by means of a transverse pin **5** and the other end of the link is connected to the crank pin **7'** of an auxiliary crank shaft **7** which is in turn secured at one end to the shaft **8'** of a planetary gear **8** which is in turn journalled in a main gear **10** with bearings interposed therebetween which main gear is loosely mounted on the main crank shaft **2**. The other end of the auxiliary crank shaft **7** is journalled in a mounting disc **10'** which is integrally formed with the main gear **10**. The planetary gear **8** is in engagement with a sun gear **9** which is fixedly mounted in the machine frame **1** in a concentric relation to the main crank shaft **2** as shown in FIG. 3 (the planetary gear **8** is shown as being separated from the sun gear **9** for clarification of showing in FIG. 2). A drive pinion **11** is fixedly mounted on one end of a main drive shaft **12** and the pinion is in engagement with the main gear **10**. The drive shaft **12** is adapted to be driven from a conventional driving source (not shown) through a pulley **12'** and a clutch (not shown) mounted on the other end of the shaft **12**.

The drive shaft **12** is adapted to rotate at a predetermined constant rate as the driving source is operated and

accordingly, the drive shaft **12** actuates to rotate the main gear **10** by virtue of the engagement between the pinion **11** and main gear **10**. As the main gear **10** is rotated in the manner as mentioned just above, the planetary gear **8** rotates about its own axis while revolving about the sun gear **9** by virtue of the engagement between the planetary and sun gears. Assuming that the planetary gear **8** and sun gear have the same number of teeth, then, the planetary gear **8** completes about its axis two rotations each time the main gear **10** completes about its own axis one rotation. Therefore, the auxiliary crank shaft **7** connected to the shaft **8'** of the planetary gear **8** completes about its axis two rotations each time the main gear **10** completes about its axis one rotation. In other words, the auxiliary crank shaft **7** rotates at the equi-angular rate. However, when this equi-angular rotational movement of the auxiliary crank shaft **7** is considered from the axis of the main crank shaft **2**, since the rotational movement of the auxiliary crank shaft **7** is transmitted through the link **6**, pin **5** and the arm **4** of the main crank shaft **2** to the main crank shaft, the equi-angular rotational movement of the auxiliary crank shaft **7** comes to appear as an equi-angular rotational movement added a crank lever movement of the so-called quadribar mechanism.

From the foregoing equi-angular rotational movement of the auxiliary crank shaft **7** as mentioned just above, it will be understood that even if the main gear **10** rotates in the equi-angular rotational movement, such movement of the main gear **10** is transmitted to the main crank shaft **2** as an inequiangular rotational movement whereby the main crank shaft **2** drives the slide S. As a result of the driving of the slide in the above manner, the displacement curves and velocity curves of the slide which are shown as A and B, respectively in FIG. 1 are obtained. FIG. 1 comparatively shows the displacement and velocity characteristics of the slide which are obtained by the slide driving mechanism of the present invention and those of the slide which are obtained by a prior art slide driving device or crank mechanism in order to manifest the advantages of the present invention over those of the prior art device.

Referring to FIG. 1 of the accompanying drawings, the curves of this figure have been plotted on the assumption that the actual operation rate of the illustrated press slide when the same is driven by the novel driving mechanism is the same as that of the same type-slide when the slide is driven by the prior art crank mechanism. In this figure, the curves shown with reference characters *a* and *b* denote the displacement and velocity characteristics of the press slide obtained by the prior art crank mechanism while the curves shown with reference characters A and B denote the displacement and velocity characteristics of the slide obtained by the novel driving mechanism. As understood from the illustration in this figure, according to the present invention the period of non-productive or idle time in a cycle, that is, the time period during which the press performs non-productive operation is substantially shorter than that in a cycle of operation by the press which employs the prior art crank mechanism as the driving means for the slide. To conversely speak, it means that if the time required for a cycle is the same in both the systems, the press can be operated at a slower drawing rate according to the present invention.

One of the most important difficulties in the fabrication of a press or a press system comprising a plurality of presses arranged in alignment in which the slide displaces describing a cosine curve is that the number of strokes of the slide per minute is restricted to a certain value by the drawing press. Therefore, in order to increase the number of the strokes per minute in the entire press system, it is necessary to increase the number of strokes per minute in the drawing press.

The present invention is, therefore, to eliminate the difficulty inherent in the prior art press or press system mentioned just above.

According to the present invention, as shown in FIG. 1 by the curves A and B, assuming that the descending velocity of the slide at the point at which the press initiates the actual productive operation is the same as that in a conventional press, the time required for a cycle of operation can be reduced to less than one-half of that required in the conventional press. In other words, while in the corresponding conventional press only less than one-quarter of a cycle time by the conventional slide driving mechanism in the form of a crank mechanism was utilized for actual processing, in the press employing the novel drive mechanism a substantial time as much as about four-ninths of a cycle can be utilized for actual productive operation.

Furthermore, according to the present invention, as mentioned above, the slide driving main crank shaft is driven from the main drive shaft through the planetary gearing, auxiliary crank mechanism and link mechanism, and therefore, the time period of non-productive or idle time in a cycle of operation can be substantially reduced whereby the slide can be displaced and returned at a fasted velocity as compared with the case of the slide movement in a prior art press resulting in an increase of the number of strokes per minute.

Although one preferred embodiment of the present invention has been described and illustrated herein, it is to be understood that the same is illustrative in nature and not to necessarily limiting upon the scope of the teaching in its broader aspect.

What is claimed is:

1. A driving mechanism for the slide in a press comprising a main crank shaft rotatably journalled in the frame of said press for driving said slide, a main gear freely mounted on said main crank shaft, a driving shaft journalled in said frame and having a fixed drive gear in engagement with said main gear for driving the latter, an auxiliary crank shaft journalled in said main gear, a planetary gear fixedly mounted on said auxiliary crank shaft and a sun gear fixedly supported in said frame in a concentric relation to said main crank shaft for engagement with said planetary gear, a crank pin of said auxiliary crank shaft being connected by means of a link to a fixed arm of said main crank shaft.

2. A driving mechanism for the slide in a press as set forth in claim **1**, in which said planetary gear rotates about its axis while the planetary gear revolves about said sun gear.

3. A driving mechanism for the slide in a press as set forth in claim **1**, in which said sun gear and planetary gear have the same number of teeth and the planetary gear completes two rotations each time the main gear completes one rotation.

4. A driving mechanism for the slide in a press as set forth in claim **1**, in which said auxiliary crank shaft completes two complete rotations each time said main gear completes one rotation.

5. A driving mechanism for the slide in a press as set forth in claim **1**, in which the equiangular rotary movement of said auxiliary crank shaft is transmitted by means of link mechanism to the main crank shaft in the form of an inequiangular rotational movement.

References Cited

UNITED STATES PATENTS

1,190,407	7/1916	Hembold et al.	74—394
1,727,194	9/1929	Belin	74—394 X
2,655,817	10/1953	Armelin	74—394
3,232,132	2/1966	Kawamura et al.	74—394

LEONARD H. GERIN, Primary Examiner

U.S. Cl. X.R.

74—793