March 19, 1940. R. F. BLANCHARD ET AL 2,193,811

SIGNALING SYSTEM AND APPARATUS

Original Filed Feb. 25, 1936 7 Sheets-Sheet 1

FIG. 1

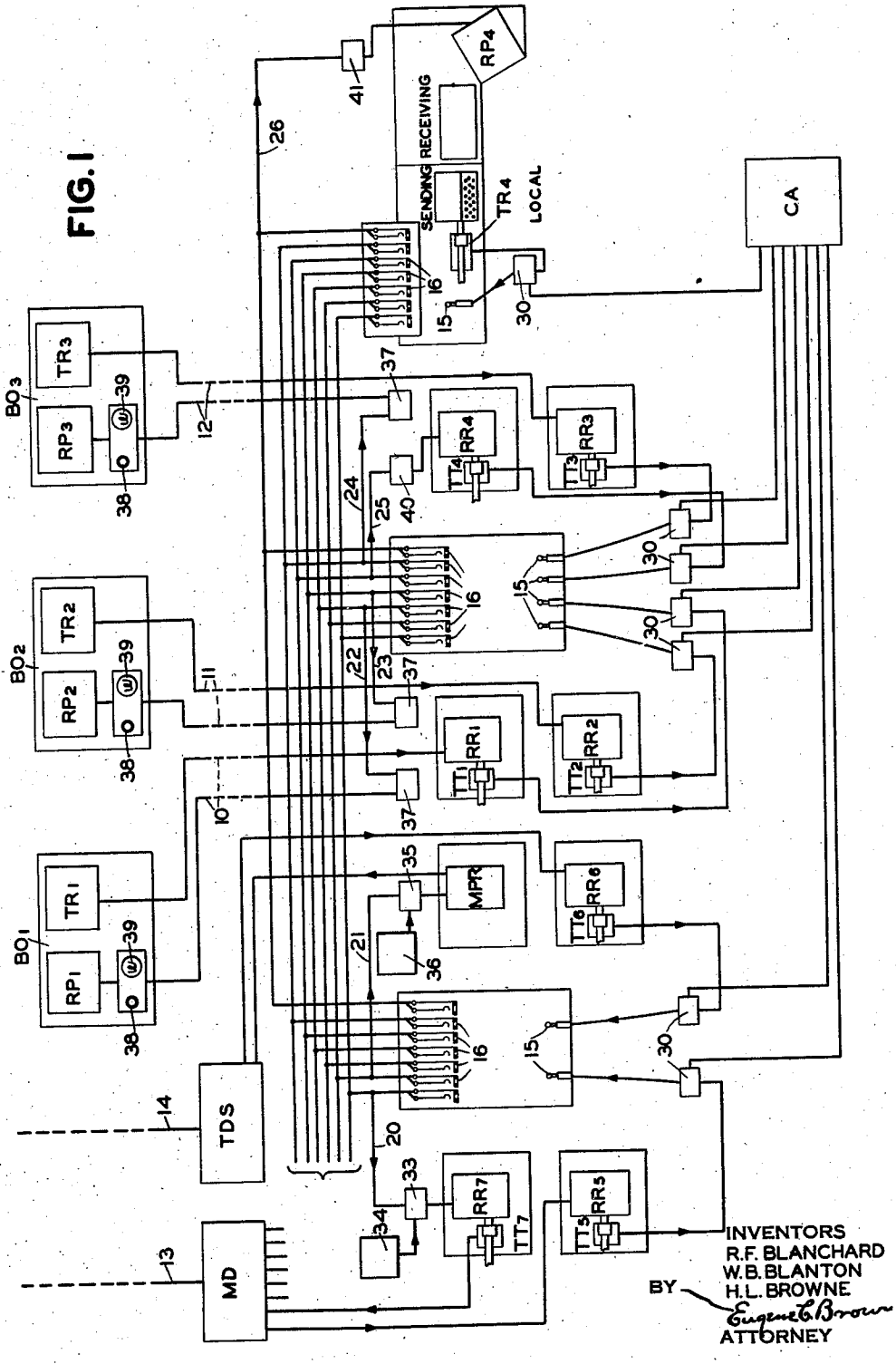

INVENTORS
R.F. BLANCHARD
W.B. BLANTON
H.L. BROWNE
BY Eugene G. Brown
ATTORNEY

March 19, 1940. R. F. BLANCHARD ET AL 2,193,811

SIGNALING SYSTEM AND APPARATUS

Original Filed Feb. 25, 1936 7 Sheets-Sheet 2

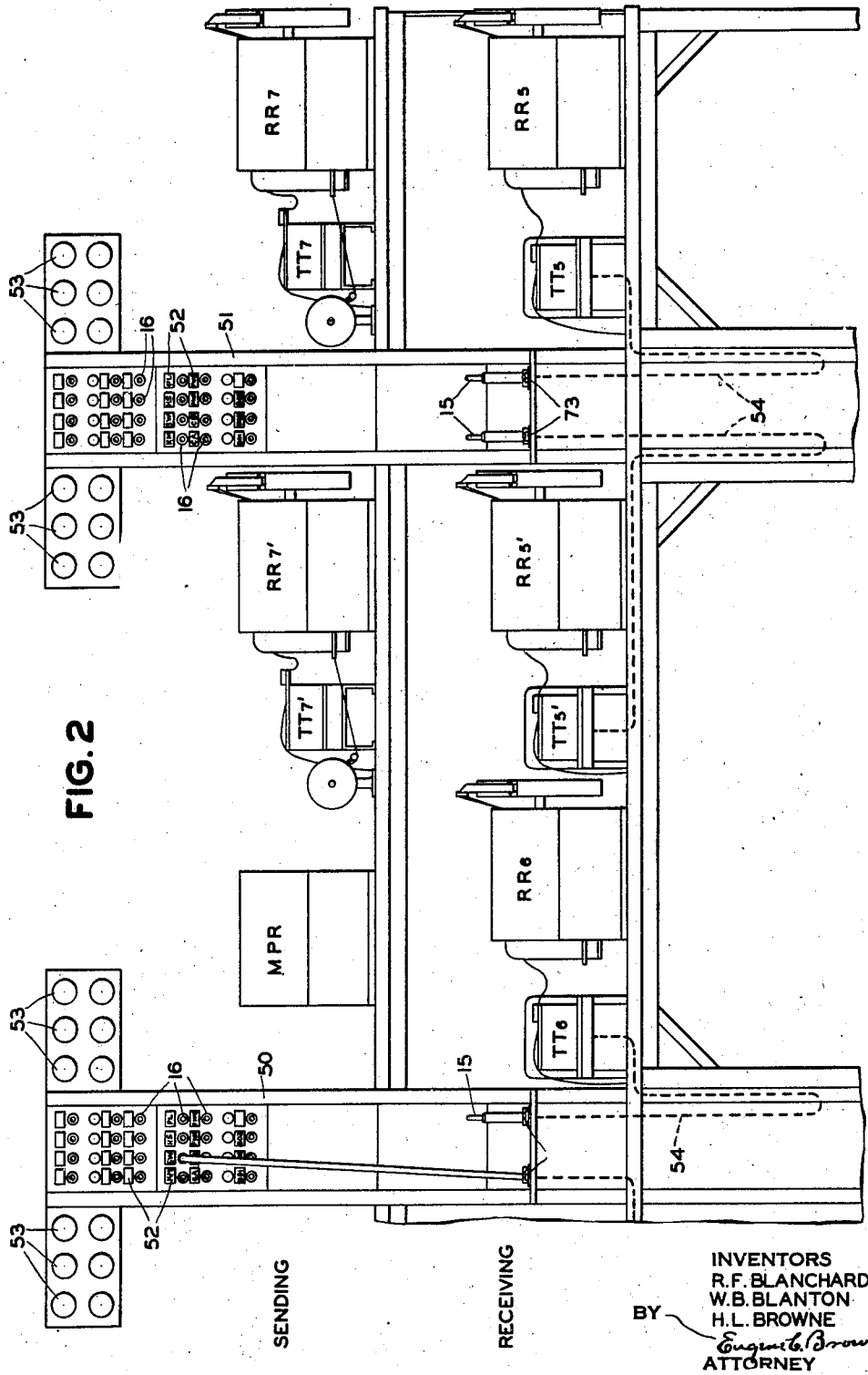

FIG. 2

INVENTORS
R. F. BLANCHARD
W. B. BLANTON
H. L. BROWNE
BY Eugene G. Brown
ATTORNEY

March 19, 1940. R. F. BLANCHARD ET AL 2,193,811

SIGNALING SYSTEM AND APPARATUS

Original Filed Feb. 25, 1936 7 Sheets-Sheet 3

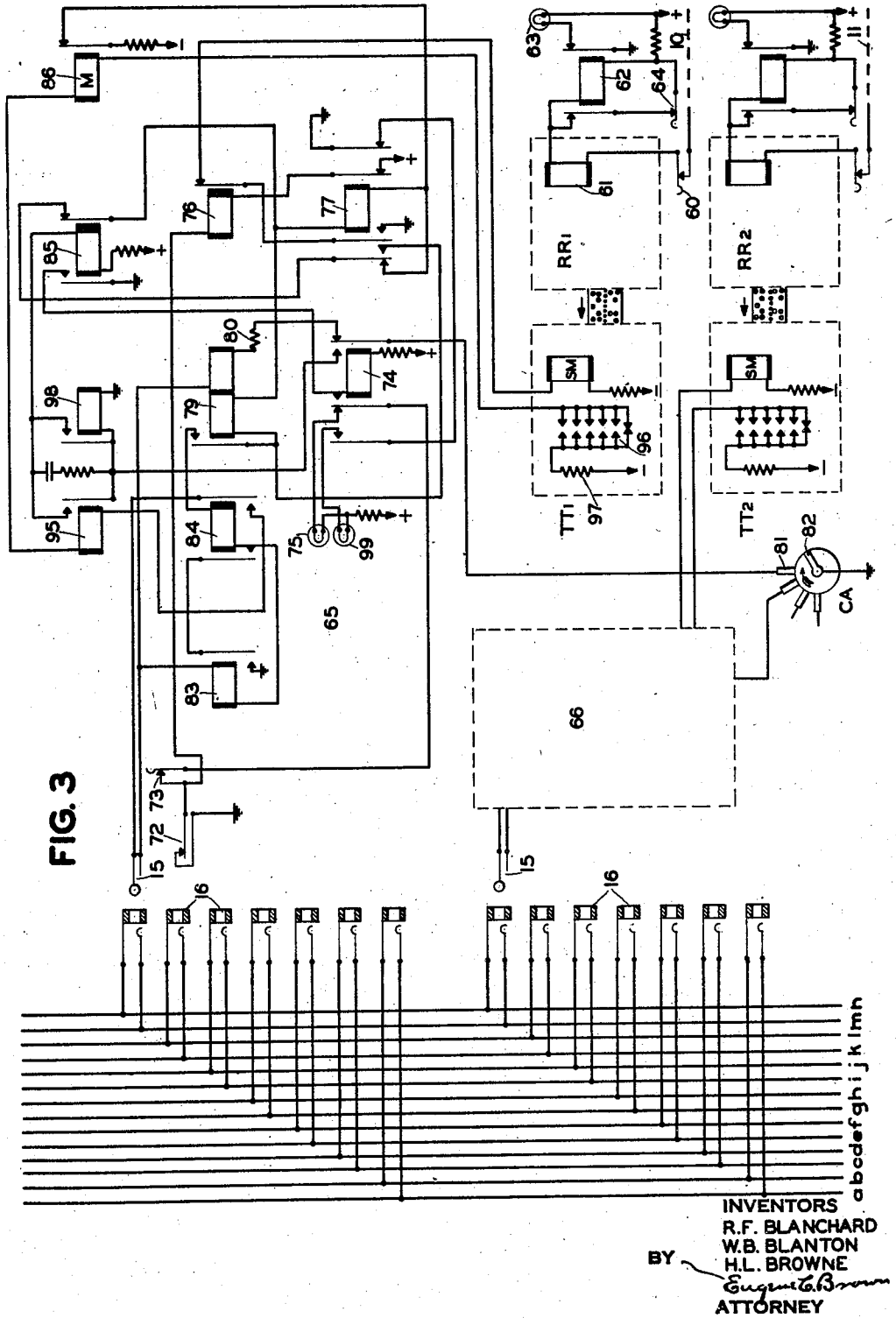

FIG. 3

INVENTORS
R.F. BLANCHARD
W.B. BLANTON
H.L. BROWNE
BY Eugene C. Brown
ATTORNEY

March 19, 1940. R. F. BLANCHARD ET AL 2,193,811

SIGNALING SYSTEM AND APPARATUS

Original Filed Feb. 25, 1936 7 Sheets-Sheet 4

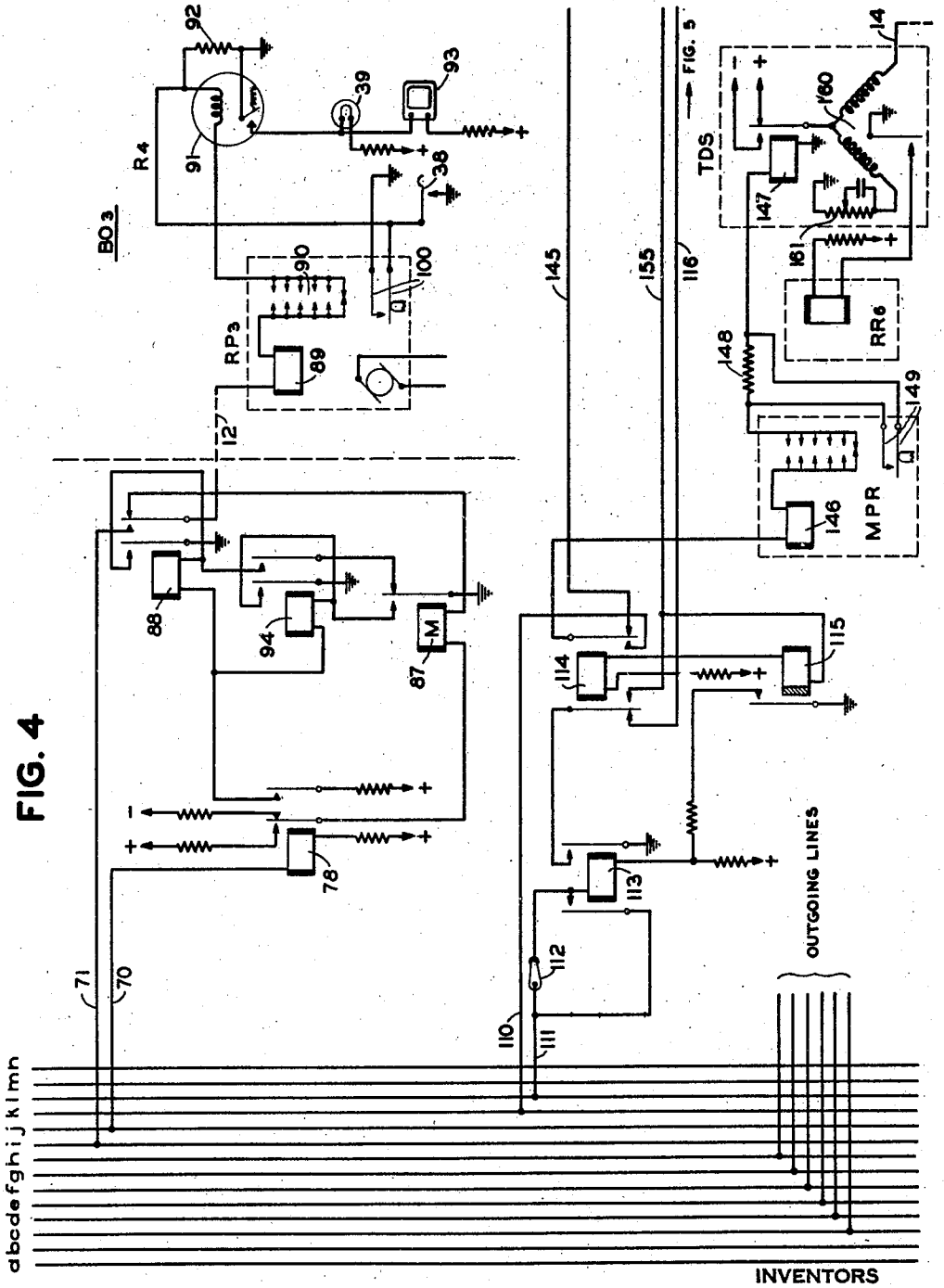

FIG. 4

INVENTORS
R.F. BLANCHARD
W.B. BLANTON
H.L. BROWNE

BY Eugene C. Brown
ATTORNEY

March 19, 1940. R. F. BLANCHARD ET AL 2,193,811

SIGNALING SYSTEM AND APPARATUS

Original Filed Feb. 25, 1936 7 Sheets-Sheet 5

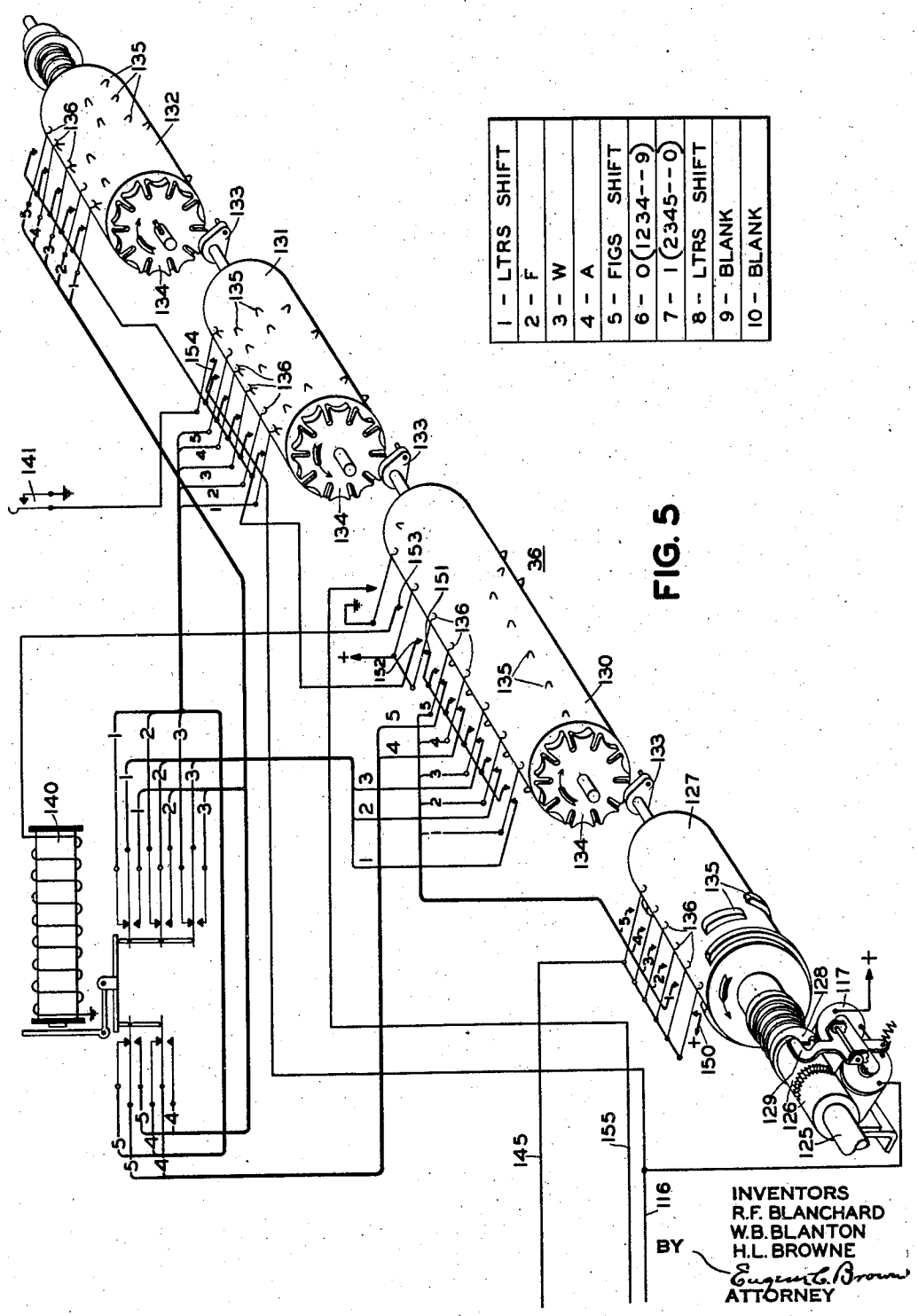

FIG. 5

March 19, 1940. R. F. BLANCHARD ET AL 2,193,811

SIGNALING SYSTEM AND APPARATUS

Original Filed Feb. 25, 1936 7 Sheets-Sheet 6

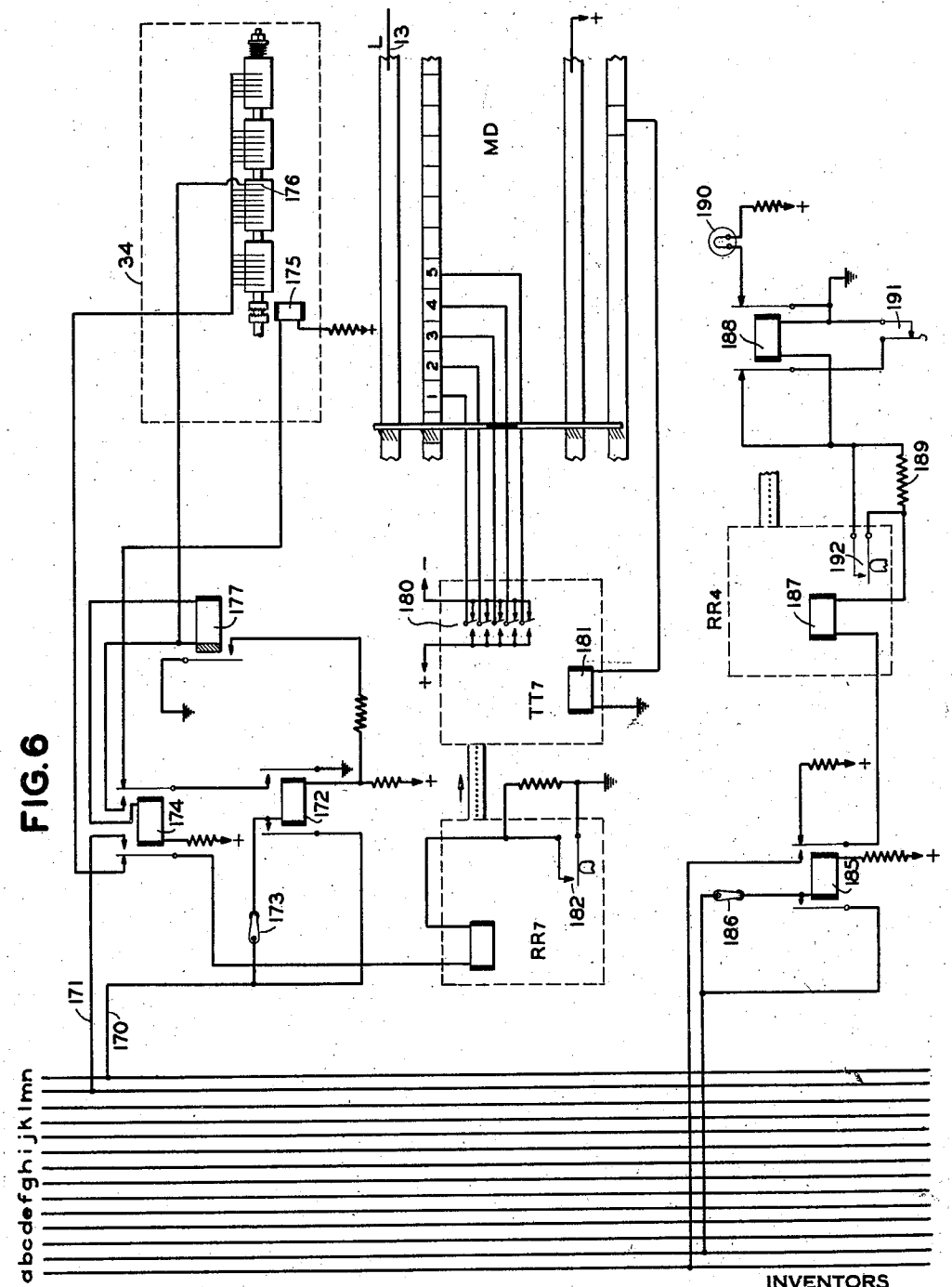

FIG. 6

INVENTORS
R.F. BLANCHARD
W.B. BLANTON
H.L. BROWNE
BY Eugenia Brown
ATTORNEY

March 19, 1940. R. F. BLANCHARD ET AL 2,193,811

SIGNALING SYSTEM AND APPARATUS

Original Filed Feb. 25, 1936 7 Sheets-Sheet 7

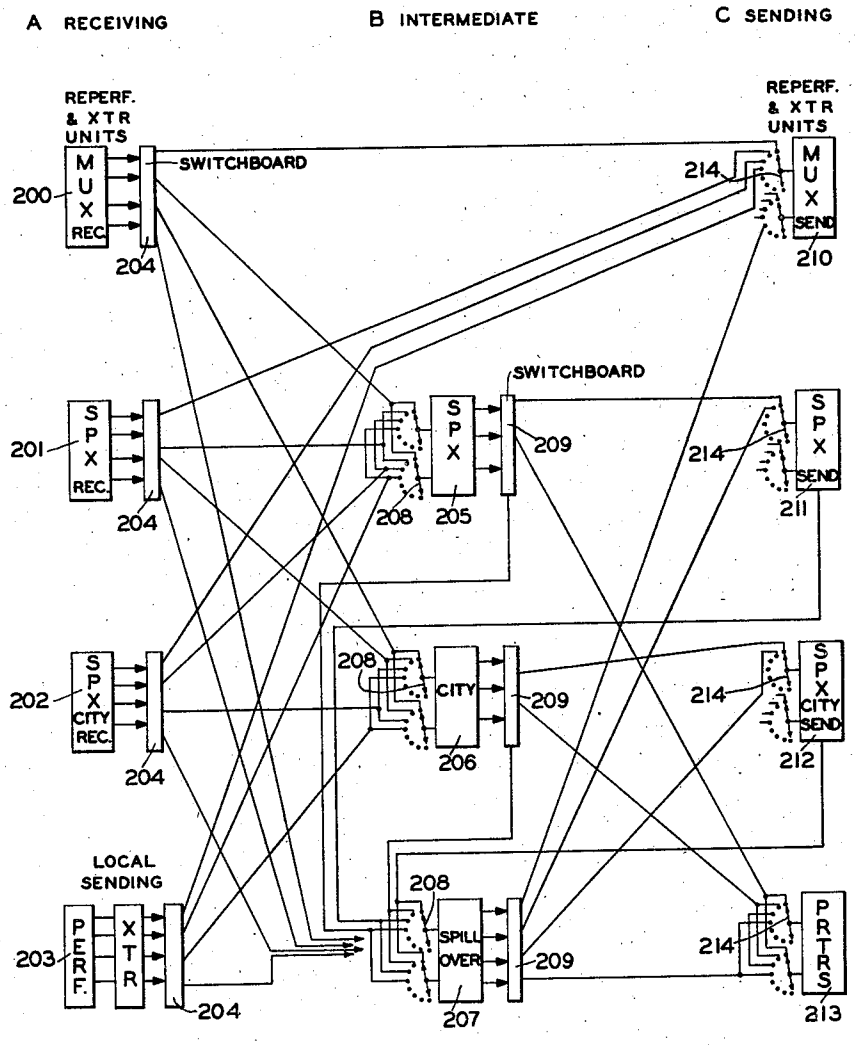

FIG. 7

INVENTORS
R.F. BLANCHARD
W.B.BLANTON
H.L.BROWNE
BY Eugene C. Brown
ATTORNEY

Patented Mar. 19, 1940 2,193,811

UNITED STATES PATENT OFFICE

2,193,811

SIGNALING SYSTEM AND APPARATUS

Rolla F. Blanchard, Westfield, N. J., and William B. Blanton, Merrick, and Harry L. Browne, Brooklyn, N. Y., assignors to The Western Union Telegraph Company, New York, N. Y., a corporation of New York

Application February 25, 1936, Serial No. 65,702
Renewed October 18, 1939

33 Claims. (Cl. 178—2)

This invention relates to methods and apparatus for storing and repeating electrical signals or current impulses, and particularly to telegraph exchange systems embodying means for relaying messages through one or more offices or stations.

In general terms the object of the invention is to expedite the transmission of signals, such as message groups of signals used in telegraphic communication, where a direct channel is not available between the originating and final stations, as for example in communication between a branch telegraph office connected to a central office and a remote office connected to the central office through one or more inter-city channels; and further to provide a method of and apparatus for automatically retransmitting groups of code signals, such as permutation code signals received from a branch or subscriber's office, over a selected one of a plurality of circuits or channels terminating in the main or central telegraph office under the control of an operator or attendant in the latter office. The word "channel" is used in a broad sense to include a metallic or phantom circuit, a channel of a multiplex or carrier current system, etc.

In printing telegraph systems, it has been common practice in the case of messages originating in branch or subscribers' offices connected to a main or central office in which inter-city trunks terminate to receive the messages on printers at the central office, transfer the printed message to a sending position having access to the outgoing trunk or channel and retransmit the message manually. This method involves a delay or "office drag" in many instances but has the advantages that the transmission is completely supervised, the messages sent over each outgoing channel may be numbered consecutively to facilitate tracing lost or mutilated messages and the routing of messages may be altered at any time as required by traffic conditions on the outgoing trunks from the central office or apparatus or line troubles.

In accordance with the present invention, apparatus for repeating or relaying messages originating at a subscriber's or branch office over outgoing channels, such as inter-city trunks, is provided at the main office. The outgoing trunk or channel is selected by an operator or attendant at the main office and retransmission of messages is effected automatically. The apparatus may include automatic means associated with an outgoing trunk of channel arranged to interpose service signals, such as consecutive numbers, between groups of message signals so that supervision, routing and numbering of messages follow present practice although manual handling and retransmission are avoided. As will be apparent, the numbering of messages may be omitted if desired and certain features of the invention are not limited in their application to printing telegraph systems of this particular character.

A further object of the invention is to provide a printing telegraph exchange system in which messages originating in branch offices may be relayed through a switchboard or other switching apparatus at the central office either to start-stop printers of other local branch offices or over multiplex channels terminating in said central office.

A further object of the invention is to provide in a printing telegraph system having a main or central office and one or more branch offices, receiving-storing devices such as reperforator-transmitters at the central office and means under the control of an operator at the central office for selecting an outgoing channel and rendering the reperforator-transmitter operative to relay messages from a branch office over the selected channel.

A still further object of the invention is to provide a printing telegraph exchange system having a main or central office, one or more branch offices, selective switching means at the central office for automatically relaying message groups of signals from the branch offices to outgoing channels terminating at the central office and double or multiple storage means for storing the signals, such as storing devices associated with incoming channels and other storing devices associated with outgoing channels from the central office. Such a system simplifies the interconnection of start-stop printing apparatus with multiplex channels and permits the operation of the several apparatus units at different speeds, if desired.

A still further object of the invention is to provide a telegraph exchange system having improved means for interconnecting incoming and outgoing lines or channels and for rendering the transmitting apparatus associated with a plurality of incoming lines operative in sequence when the lines are extended to the same outgoing channel.

Another object of the invention is to provide in a telegraph system means for storing and repeating signals to control the operation of a remote printer or other receiving apparatus and revertive control means for controlling the operation of the repeating apparatus upon the re-

ceipt of a predetermined signal by the printer or other receiving apparatus.

Another object of the invention is to provide a telegraph exchange system having means for transmitting signals over a selected line or channel, means for automatically stopping the transmission of signals in case the transmitting circuit becomes opened or grounded and/or means for operating a signal when the transmitting circuit is open or grounded.

Other objects and advantages of the invention will become apparent from the following description of a preferred embodiment thereof shown on the accompanying drawings wherein

Fig. 1 is a diagrammatic view of the general arrangement of circuits and apparatus at a main or central office connected to three branch offices;

Fig. 2 is a front elevational view of a portion of the switchbard with associated receiving and transmitting apparatus at the main office;

Fig. 3 is a circuit diagram of the reperforator-transmitter and associated circuits individual to each of the incoming lines from branch offices;

Figs. 4, 5 and 6 are circuit diagrams of the apparatus associated with outgoing lines or channels and with other units such as spillover reperforators accessible through the switchboard at the main office; and

Fig. 7 is a diagram illustrating a modification wherein triple storage is employed.

Referring to Fig. 1 of the drawings, a typical system shown by way of example comprises a plurality of branch or subscribers' offices BO1, BO2 and BO3 connected to the main or central office by lines 10, 11 and 12, respectively. Other lines 13 and 14 extending to remote offices terminate in a multiplex distributor MD and a terminal duplex set TDS, respectively.

In accordance with one feature of the invention, message groups of signals in printing telegraph code originating in a branch or remote office are stored in the central office, and, under the control of an attendant at the central office, are relayed or retransmitted over a selected one of the outgoing circuits. Since certain of the transmitters or printers may be of the start-stop type and in other elements of the system synchronism may be maintained by other means than the use of start-stop signals, the invention provides for the interconnection of both types of apparatus and for the operation of the various units at different speeds in order to obtain maximum efficiency.

In the embodiment of the invention shown, the start-stop transmitters TR1, TR2 and TR3 at the branch or subscribers' offices are connected to signal storage devices, such as reperforators RR1, RR2 and RR3 at the central office adapted to record the messages on tape in a form adapted to operate a tape transmitter. If desired, other types of storage devices may be utilized such as metallic or electrical storage devices arranged to store a suitable number of code signals to be subsequently repeated. A storage device of the so-called "infinite storage" type providing a permanent record of both message signals and printed characters is preferred however. Each reperforator has associated therewith a tape transmitter TT1, TT2, TT3 for repeating the stored signals, each transmitter being connected to switching means controlled at the central office for relaying the message over a selected line or channel terminating at said office.

In its preferred form, the switching means at the central office comprises a switchboard of the conventional plug and jack type and constructed as shown in detail in Fig. 2. The plugs 15 are connected to cord circuits individual to the respective transmitters and the multipled jacks 16 are connected to circuits 20, 21, 22, 23 and 24 to outgoing lines or channels, or circuit 25 to reperforator RR4 for storing deferred or spillover messages, or circuit 26 to a printer RP4 at the local receiving position. A transmitter TR4, for example, a keyboard tape perforator and tape transmitter, is also provided at the local position in the central office for sending messages originating at said office. The transmitter TR4 by means of its associated cord circuit and connecting plug 15 may be connected to any of the circuits terminating in the jacks 16. Messages recorded by the spillover reperforators RR4 may be repeated by the associated tape transmitter TT4 through the switchboard into any one of the outgoing lines. Similarly, messages received over the lines 13 and 14 and recorded by the reperforators RR5 and RR6 may be relayed through the cord circuits individual to the associated tape transmitters TT5 and TT6, respectively.

Each of the cord circuits is provided with control relays 30 adapted to render the associated transmitter operative under certain conditions, as will be explained hereinafter in connection with the detailed description of the circuits shown in Figs. 3, 4, 5 and 6; to stop the transmitter at the end of each message; and in connection with a circuit allotter CA to send messages in sequence in case more than one transmitter is plugged into the same outgoing channel or switchboard circuit at the same time. The circuit 20 from the switchboard to the line 13 includes a reperforator RR7 having associated therewith a tape transmitter TT7 connected to one channel of the multiplex distributor MD. The circuit 20 further includes control relays 33 arranged in connection with a numbering device 34 to interpose service signals such as consecutive numbers between message groups of signals. The circuit 21 from the switchboard to the duplex signaling circuit 14 includes control relays 35 and a monitor printer MPR for recording the messages transmitted in printed form. A numbering device 36 similar to the device 34 may be provided if desired in connection with the signaling circuit 14 or any of the other outgoing lines or channels. The circuits 22, 23 and 24 from the switchboard to the branch office lines 10, 11 and 12 are provided with control relays 37 arranged to start the central office transmitter upon the depression of a push button 38 by the branch office operator who is signalled by the calling lamp or signal 39 when a message is to be transmitted from the central office to the branch office. The circuits 25 and 26 from the switchboard to the spillover reperforator RR4 and printer RP4 are provided with control relays 40 and 41 operating in conjunction with the cord circuit relays 30 to close the signaling circuits and start the connected transmitters at the beginning of a message and to open the signaling circuits at the end of each message.

Each group of message signals is followed by an end-of-message signal which stops the tape transmitter in the cord circuit and releases the outgoing channel or line so that another message waiting for said channel or line may be sent immediately. An operator or attendant at the central office simply plugs each transmitter into the proper channel after noting the destination

of a message from the printed tape. The message is sent automatically as soon as the selected channel becomes available and no further attention is required of the operator except to withdraw the plug upon receiving a signal that transmission has been completed.

In addition to the advantages accruing from the supervision and routing of messages in the central office, the system embodying the invention possesses material advantages over full automatic switching of telegraph circuits wherein the selection of lines or channels is controlled from the originating office. Special services may be provided, such as timed wire service, sending full rate messages ahead of deferred messages which are held in the spillover position, etc. The numbering of consecutive messages over heavily loaded channels greatly facilitates the tracing of lost or mutilated messages. Furthermore, since the messages are stored and repeated in the process of switching the circuits, each stage of the transmission may be carried out at the highest practicable speed and no difficulty is encountered in working start-stop transmitters into the synchronous distributors of multiplex systems. This is advantageous because of the fact that many branch offices are equipped with start-stop transmitters and the heavily loaded inter-city trunks are usually operated multiplex. It will be apparent that various types of control or switching apparatus may be employed at the central office for interconnecting lines and relaying groups of signals and that other modifications in the system shown schematically in Fig. 1 and in detail in Figs. 3, 4, 5 and 6 may be made without departing from the scope of the invention. It is believed, however, that the specific types of apparatus units and their relationship as illustrated in the drawiings have certain advantages for use in multi-office printing telegraph systems of the usual character.

Fig. 2 illustrates a preferred arrangement of the switchboard and associated storing and retransmitting apparatus. The portion of the switchboard illustrated includes two vertical spaced panels **50** and **51** containing multipled jacks **16**. Suitable labels **52** are arranged adjacent the respective jacks in each panel and calling and supervisory lamps **53** are mounted at the upper ends of the switchboard panels. The printers, reperforators and tape transmitters associated with the cord and jack circuits of the switchboard are mounted in tiers adjacent the respective panels, as shown. The panel **50** is associated with the inter-office duplex trunk **14**. The receiving reperforator RR6 and tape transmitter TT6 associated with the receiving side of said trunk and the monitor printer MPR for supervising transmission into said trunk are mounted adjacent said panel **50**. The cords connecting the respective transmitters to the plugs **15** are indicated by the dotted lines **54**. The panel **51** is associated with the multiplex inter-office trunk **13** and the receiving reperforators RR5 and RR5' and tape transmitters TT5 and TT5', and the sending reperforators RR7 and RR7' and tape transmitters TT7 and TT7' associated with two channels of said trunk are mounted adjacent said panel. The switchboard panel associated with branch office lines **10**, **11** and **12** may be similarly arranged except that, since no storage or monitoring of the code signals transmitted over said lines from the central office is required, the three receiving units consisting of reperforators RR1, RR2 and RR3 and tape transmitters TT1, TT2 and TT3 may be mounted adjacent a single panel and three connecting plugs **15** arranged at the base of the panel. In general, the mounting of the printing, storage and transmitting apparatus in relation to the switchboard panels may be varied depending upon the character and number of apparatus units required, the traffic conditions encountered and other considerations.

Detailed description

The system shown diagrammatically in Fig. 1 is illustrated in detail in Figs. 3, 4, 5 and 6. Fig. 3 is a circuit diagram of two cord circuits for extending calls from two tape transmitters TT1 and TT2 to switchboard jacks **16** in the same or separate panels or sections of the switchboard. As shown in Fig. 1, each incoming line whether from a local branch office or remote office terminates in a receiving-storing device and transmitter, such as a tape printer and reperforator, and tape transmitter. In each case a cord circuit individual to each tape transmitter is provided and thus the tape transmitter and cord circuit shown in the upper half of Fig. 3 is illustrative of each of the receiving and retransmitting units on incoming lines at the central office. The transmitters and cord circuits at the spillover position and at the local sending position (Fig. 1) are also similar to those shown in Fig. 3.

The branch office printers may be provided with start-stop simplex transmitters TR1, TR2 and TR3 similar to the Tape Teletype (Model 14) described in Bulletin No. 126 of the Morkrum-Kleinschmidt Corporation. The receiving reperforators RR1, RR2, etc., preferably print the message character as well as perforate a tape in such manner that when said tape is passed through a tape transmitter, the message signals will be repeated, and may be of the type shown in the patent to Rothermel, No. 1,936,956, dated November 28, 1933, or that shown in the copending application of Robert F. Dirkes and Evan R. Wheeler, Ser. No. 42,692, filed September 28, 1935. The tape transmitters associated with each cord circuit may be of the type shown in the patent to Rothermel, No. 1,805,374 dated May 12, 1931.

The described system may utilize simplex, duplex or multiplex transmission channels of various types and the transmitting and storing or recording apparatus may be either of the type wherein continuous synchronism is maintained between the two terminal stations or wherein start-stop impulses at the beginning and end of each signal are utilized to maintain synchronism. Thus while the branch office printers have been described as of the start-stop type, synchronous distributors may be used and the reperforator at the receiving end in that case may be of the type shown in the patent to Hoover and Haupt, No. 1,851,838 dated March 29, 1932. The system embodying the invention, therefore, is not limited in respect to the type of circuits or apparatus employed or to uniform transmission rates in different parts of the system as in the case of telegraph exchange systems heretofore proposed.

Transmission from branch office to second branch office

As shown in Fig. 3, the line **10** extending to a branch office where it is normally grounded is connected through a switch **60** to the operating magnet **61** of reperforator RR1 and to the winding of a normally energized relay **62** having the

other terminal thereof connected to battery. The first spacing signal received over the line 10 from the transmitter TR1 causes the relay 62 to become deenergized, thereby closing the circuit of the calling lamp 63 through the right hand armature and back contact of said relay. The winding of relay 62 is short-circuited through its left hand armature and back contact and the signal lamp 63 remains lighted until the switch 64 is opened after completion of transmission of the message. The message is recorded in the form of a perforated tape by the reperforator RR1 and preferably also printed upon the same or another tape as in the apparatus described in the patent to Rothermel, No. 1,936,956, and the copending application of Dirkes and Wheeler referred to above. In the case of messages received over a duplexed or multiplex line, the messages are recorded and a lamp or other signal operated in a similar manner. The messages are thus cleared out of the originating office without delay because of busy channels at the central office or other causes.

The tape transmitter TT1 is associated with the reperforator RR1 and is connected to the switchboard through a cord circuit 65 individual to the line 10 and terminating in the plug 15. The line 11 is provided with a similar reperforator RR2 and tape transmitter TT2, and messages received over said line are relayed through a second cord circuit 66 individual to said transmitter and line to an outgoing line or switchboard circuit accessible from the jacks 16. The cord circuits individual to the respective incoming lines are all identical and therefore the detailed description of the cord circuit individual to line 10 (Fig. 3) will suffice.

Upon receiving a message upon the reperforator RR1, the operator notes the destination of the message from the tape and plugs the cord circuit 65 into the jack 16 corresponding to the proper outgoing line or channel. Assuming that this is the line 12 to branch office BO3, (Fig. 4) the switchboard plug is inserted into the jack 16 connected to the switchboard multiple conductors *i* and *j*, thereby extending the connection to the conductors 70 and 71. The sending sides of the lines to each of the branch offices are connected to separate groups of switchboard jacks 16 as illustrated in Fig. 4 for branch office BO3. The multiple jack circuit equipment is individual to one outgoing circuit (or to the local or spillover positions) but is different for each type of circuit to the distant terminal depending upon the method of transmission and the type of receiving equipment. Each jack 16 comprises tip and sleeve contacts adapted to receive the tip and sleeve of the plug 15. The tip circuit is employed to transmit the code signals from the tape transmitter associated with the cord circuit to the receiving apparatus and the closing of the sleeve circuit causes the transmitter to seize the outgoing line or channel if it is idle and renders the jack circuit busy to any other cord circuit that may attempt to seize the same line or channel. In case more than one tape transmitter and associated cord circuit are connected to the same channel through the multipled jacks 16, the circuit allotter CA (Fig. 3) renders the transmitters operative in succession. The operations that take place before the transmitter is connected through theh tip circuit of the switchboard multiple to the receiving printer or storing device depend upon the type of circuit selected in the switchboard and accordingly various typical circuits have been illustrated in Figs. 4, 5 and 6.

When the switchboard plug 15 is raised for insertion into a switchboard jack, the plug seats switch 72 is closed thereby closing a circuit through switch 73 and left hand inner armature and back contact of relay 74 for lighting the supervisory lamp 75. The plug seat switch 72 closes a second circuit through the winding of slow release relay 76 and the right hand inner armature and back contact of relay 17 to energize relay 76. The energization of relay 76 opens the circuit through the start magnet SM of transmitter TT1 to guard against premature starting of the transmitter.

Assuming as stated above that the connection is to be extended to a start-stop printer at branch office BO3 and the plug 15 is inserted into jack 16 connected to conductors *i* and *j*, a circuit is closed through the winding of relay 78 (Fig. 4), conductors 70 and *j*, sleeve of jack 16, sleeve of plug 15, right hand winding of test relay 79, resistance 86, and the right hand armature and back contact of relay 74 to the brush 81 of circuit allotter CA. The circuit allotter CA comprises a plurality of spaced brushes, one for each cord circuit, and a rotating grounded segment 82 arranged to connect each of said brushes momentarily and successively to ground. If the line to branch office BO3 is idle, relays 78 and 79 become energized when segment 82 engages the brush 81. If the line has been seized by a second cord circuit, the multipled jacks individual to said line will be "busy" as described below and test relay 79 will not be operated until the connection has been released.

If the selected line is idle, the energization of test relay 79 closes a circuit from positive battery through the winding of relay 78, conductors 70 and *j*, sleeve of jack 16 and plug 15, windings of relays 83 and 84, left hand armature and front contact of relay 79, left hand winding of relay 79, right hand armature and back contact of slow release relay 85, left hand outer armature and back contact of relay 77 and the armature and back contact of relay 86 to negative battery, thereby energizing relays 83 and 84. The energization of relays 83 and 84 places a ground on the described circuit between the windings of relays 83 and 84 through a circuit including the armature and front contact of relay 83 and the left hand armature and front contact of slow release relay 84. Thus the relay 78 and 83 are locked up as long as relay 84 is operated and the potential of sleeve of jack 16 is such that the test relay of another cord circuit will not operate when connected thereto as the resistance of the test relay circuit is large compared to that of relay 83.

The energization of relay 78 reverses the potential of the line 12 extending to the branch office BO3 through a circuit leading from the inner armature of said relay through the winding of marginal relay 87, outer armature and back contact of relay 88, line 12, operating magnet 89 and the normally closed rest contact of the transmitting contacts 98 of the receiving printer RP3, winding of the polarized relay 91 and resistance 92 to ground. The polarized relay 91 responds to the change of polarity of the line and closes the circuits of the calling lamp 39 and buzzer 93 to notify the operator at the branch office that the main office desires to transmit a message. The marginal relay 87 does not operate on normal line current and therefore does not

close its contacts until the line current is increased as described below.

The attendant at branch office BO3 may initiate transmission of the message, after starting the printer motor or completing any other preliminary operations, by momentarily closing switch 38. The contacts of switch 38 are arranged to short-circuit the resistance 92 whereupon the line current is momentarily increased and the marginal relay 87 is operated. The operation of relay 87 energizes relay 94 through the armatures and front contacts of relays 87 and 78, and a locking circuit for relay 94 is provided through its inner armature and front contact that is independent of relay 87. When the attendant at the branch office releases the switch 38, relay 87 is deenergized and closes a circuit through its armature and back contact and the outer armatures and front contacts of relays 94 and 78 for energizing relay 88. The outer armature of relay 88 is connected to the line 12 and the energization of said relay transfers the line from the contacts of relay 78 to the tip conductor 71 which is connected through the tip contacts of the switchboard plug and jack, the right hand armature and front contact of relay 84, the winding of relay 95, the winding of marginal relay 86, the normally closed rest contact of the transmitting contacts 96 of transmitter TT1 and resistance 97 to negative battery. The transmitter TT1 is now connected to the line wire in readiness to start transmission.

Since the line 12 is now connected to negative battery at transmitter TT1, the armature of the polarized relay 91 is actuated to open its contacts, thereby extinguishing signal lamp 39 and opening the circuit of the buzzer 93 at the branch office BO3. Relay 95 is energized but marginal relay 86 is adjusted so that it will not operate on normal line current. It will operate, however, if the line current is increased by the closure of switch 38 or contact 100 in the printer RP3 in response to the transmission of the end-of-message signal as described below; it will also operate if the line between the main office and the branch office becomes grounded. Relay 86 is arranged to stop the transmitter TT1, as will be described hereinafter, and thus this operation may be effected manually by the attendant at branch office BO3 or automatically in response to the transmission of the end-of-message signal or the occurrence of a ground on the line circuit.

Upon the energization of relay 95, a circuit is closed from battery through the winding of slow release relay 85, the armature and front contact of relay 95 and the winding of relay 98 to ground, whereupon relays 85 and 98 become energized. Relay 98 closes a locking circuit for itself and relay 85 that is independent of relay 95. Upon the energization of relay 85, a circuit is closed through its left hand armature and front contact for energizing relay 74, and at its right hand armature and back contact relay 85 opens a short-circuit around the winding of relay 77 whereupon relays 74 and 77 become energized. The energization of relay 74 opens the circuit of signal lamp 75 at its left hand inner armature, extinguishing said lamp to indicate to the attendant that transmission of the message has started, and closes through said armature a locking circuit for said relay through switches 72 and 73. The relay 74 also opens the circuit from the right hand winding of test relay 79 to the circuit allotter CA and closes a circuit from the latter to the winding of relay 98 whereby the winding of the said relay is periodically short-circuited. The purpose of this arrangement is to guard against transmission into an open line between the central office and the branch or remote office as will be explained below.

The energization of relay 77, as above described, opens at its inner right hand armature and back contact the circuit of slow release relay 76 whereupon this relay becomes de-energized and closes the circuit of the start magnet SM of the tape transmitter TT1. The delay in closing the start circuit of transmitter TT1 permits the printer RP3 to come to rest if the cam shaft of the printer was released upon the reversal of the polarity of the line 12 by the operation of relay 88. The circuit of the start magnet SM includes the armature and back contact of relay 76 and the left hand inner armature and front contact of relay 77. Upon the energization of the start magnet SM, the transmitter TT1 starts to transmit the signals stored in the tape from the reperforator RR1 over the line 12 to the printer RP3 at branch office BO3.

If the line 12 should become opened or grounded after transmission has started, it is desirable that transmission be stopped automatically to prevent loss of signals. To this end the operation of the transmitter TT1 is controlled in accordance with the condition of the line in a simple and effective manner and without interrupting transmission under normal conditions. Relay 95 is connected in series with the line so as to be traversed by the signaling currents. Therefore, each time the signaling circuit is interrupted, relay 95 becomes de-energized. As pointed out above, relay 98 is periodically de-energized by the circuit allotter CA which periodically closes a short-circuit around the winding of relay 98 through the right hand armature and front contact of relay 74. The circuit allotter is preferably constructed to effect this result every two or three seconds or at even shorter intervals. Since the ground connection through the circuit allotter CA is of low resistance, relay 98 becomes de-energized every time the brush 81 contacts with the segment 82. If relay 98 is de-energized at the same time that relay 95 is de-energized, the circuit of relay 85 will be opened. Relay 85 is a slow release relay and its armatures will not be released immediately. If the line 12 to the branch office BO3 is in operable condition and is not open, a marking signal will be transmitted over said line with a minimum frequency of once in each character transmitted, thereby reenergizing relay 95 and reclosing the circuit of relay 85 within a definite time limit. The slow release relay 85 is adjusted so that it will not release during such time limit and therefore when the line is in operable condition, relay 95 will reclose the circuit of relay 85 through the armature and winding of relay 98 before relay 85 opens its contacts. The operation of relays 95 and 98 in this manner recurs continuously at short intervals during transmission from the transmitter TT1 to the outgoing line.

However, if the line circuit is open, relay 95 will be deenergized and upon the first subsequent engagement of segment 82 with the contact 81 of the circuit allotter CA, relay 9 will become de-energized. The deenergization of relay 98 will open the circuit of relay 85 and since the line circuit is open, relay 95 remains deenergized so that relay 98 cannot be reenergized and the circuit of slow release relay 85 remains open. After a short interval of time relay 85 becomes de-

energized and closes at its right hand armature and back contact a short-circuit around the left hand winding of relay 79. This circuit may be traced from said winding to the right hand armature and back contact of relay 85, and through the left hand outer armature and front contact of relay 77 to the other terminal of the left hand winding of relay 79. Thereupon relay 79 becomes deenergized and opens the circuits of relays 77 and 84. When relay 77 becomes deenergized, the circuit of the start magnet SM of transmitter TT1 is opened at the left hand inner armature and front contact of said relay whereupon the transmitter TT1 stops. The deenergization of relay 77 also closes a circuit through its right hand inner armature and back contact, the winding of slow release relay 78 and the contacts of plug seat switch 72 to ground, whereupon relay 76 becomes energized and opens at a second point the circuit of the start magnet SM of transmitter TT1.

The deenergization of relay 77 further closes a circuit through the right hand outer armature and back contact of said relay and the left hand outer armature and front contact of relay 74 for lighting signal lamp 99, indicating that transmission has stopped. Relay 77 further closes a short-circuit around its own winding through its left hand outer armature and back contact, and the right hand armature and back contact of relay 85. After the deenergization of relay 77, slow release relay 84 becomes deenergized, thereby opening at its right hand armature and front contact the circuit from the transmitting contacts 98 of the transmitter TT1 to the printer RP3 at the branch office BO3. The deenergization of relay 84 also opens the circuit of relays 83 and 78 whereupon said relays become deenergized. All of the relays associated with the cord circuit 85 are now deenergized except relays 74 and 76. Relay 74 may be deenergized by the attendant at the central office by operating switch 73 or both relays 74 and 76 may be deenergized by removing plug 15 from the jack and returning said plug to its seat, thereby opening the plug seat switch 72 and removing the ground connection from the circuits of the windings of relays 74 and 76. The attendant at the central office will note that the message passing through the transmitter TT1 has not been completely transmitted and will take the necessary precautions to avoid the loss of said message.

When the line between the central office and the branch office is accidentally grounded during the transmission of a message, transmitter TT1 will be stopped in the following manner:—The ground upon the line circuit will cause the line current to be increased and thereby operate marginal relay 86. The operation of relay 86 will open the battery supply through its armature and back contact for the windings of relays 77, 79 and 84, whereupon relays 77 and 79 are deenergized and slow release relay 84 will be deenergized a moment later. The deenergization of relay 77 opens at its left hand inner armature and front contact the circuit of the start magnet SM of the transmitter TT1 and the transmitter stops. Relay 77 also closes through its right hand inner armature and back contact the circuit of relay 76 and this relay becomes energized. At its right hand outer armature and back contact, relay 77 closes the circuit of signal lamp 99 and this lamp is lighted to indicate to the attendant that transmission has ceased.

When relay 84 becomes deenergized, it opens the circuit of the transmitter TT1 at the right hand armature and front contact of said relay. The deenergization of relay 84 further opens at its left hand armature and front contact the circuit of relays 83 and 78 whereupon said relays are deenergized. Relays 95 and 86 are deenergized when the circuit through the right hand armature and front contact of relay 84 is opened.

Upon the next engagement of brush 81 and segment 82 of the circuit allotter CA, the winding of relay 96 is short-circuited whereupon said relay becomes deenergized and opens the circuit of relay 85. Upon the deenergization of relay 85 a short-circuit is completed around the winding of relay 77 through the right hand armature and back contact of relay 85, and the left hand outer armature and back contact of reltay 77. All of the relays in the cord circuit 65 are now deenergized except relays 74 and 76. Relay 74 may be deenergized by the attendant at the central office by opening switch 73 in the locking circuit of said relay or both relays 74 and 76 may be deenergized by returning the plug 15 to its seat, thereby opening the plug seat switch 72 and removing the ground connection from the windings of relays 74 and 76. The attendant at the central office will note that the message in the transmitter TT1 has not been completely transmitted and will take the necessary steps to insure against the loss of said message.

At the end of each message, an end-of-message signal originally appended to the message by the operator at branch office BO1 is transmitted by the transmitter, as for example, a bell signal which operates upon a code signal corresponding to the upper case "J". When this end-of-message signal is received in the printer RP3 (Fig. 4) the operation of the printer in response to said signal will cause contacts 100 of the printer to close momentarily thereby providing a short-circuit path to ground around the resistance 92. In this manner the line current in the circuit is momentarily increased and marginal relay 86 becomes energized. The energization of relay 86 opens the battery circuit of relays 77, 79 and 84, whereupon relays 77 and 79 are immediately deenergized and slow release relay 84 becomes deenergized a moment later.

When relay 77 is deenergized, the circuit of the start magnet of said transmitter TT1 is opened and the transmitter stops even though there may be another message awaiting transmission in the tape. The deenergization of relay 77 closes a circuit through its right hand inner armature and back contact for energizing relay 76 and upon the operation of relay 76, the circuit of start magnet SM of transmitter TT1 is opened at a second point. The deenergization of relay 77 further closes through its right hand outer armature and back contact the circuit of signal lamp 99, whereupon this lamp is lighted to indicate that transmission has ceased.

Upon the deenergization of relay 84 the circuit of the transmitting contacts 96 of the transmitter TT1 is opened at the right hand armature and front contact of said relay. The deenergization of relay 84 further opens at its left hand armature and front contact the circuit of relays 83 and 78 whereupon relays 83 and 78 become deenergized. The circuit of relays 86 and 95 is also opened at the right hand armature and front contact of relay 84 and these relays become deenergized. The deenergization of relay 95 interrupts the circuit through the windings of relays 85 and 96 in shunt to the contacts of relays 98

whereupon these relays become deenergized as soon as the grounded segment 82 of the circuit allotter CA effects the short-circuiting of relay 98. Upon the deenergization of relay 85 the circuit of relay 74 is opened but this relay remains energized through its locking circuit including switches 72 and 73. Thus it will be seen that as a result of the end-of-message signal, transmitter TT1 has been stopped, the line from said transmitter to the branch office has been opened at the contacts of the relay 84, the signal lamp 99 lighted, and all the cord circuit relays except relays 74 and 76 have been deenergized. The circuit allotter CA will now function to cause any other cord circuit which may be waiting for a connection to the branch office BO3 to be connected to said station through the line 12 in the manner already described. The transmitter TT1 will not be reconnected to the line 12, however, because relay 74 remains energized and thus holds open the circuit of the test relay 79 which initiates the operation of the control apparatus. Therefore, although the plug 15 may be allowed to remain for an indefinite time in the jack 16, the connection so established will have no effect and messages that may be awaiting transmission at other positions for branch office BO3 will be sent.

The signal lamp 99 is lighted, however, to notify the central office attendant that transmission of the message has been completed and the transmission circuit released. If there is another message awaiting transmission on the tape from the reperforator RR1, this message may be destined either for the same branch office BO3 or for another branch or remote office. If there is no other message on the tape from the reperforator RR1, the attendant in response to the lighting of lamp 99 removes the plug 15 from the jack and restores it to its seat. The contacts of the plug seat switch 72 are opened, thereby opening the circuits of relays 74 and 76 whereupon these relays become deenergized and the lamp 99 is extinguished. The cord circuit and associated apparatus are now restored to normal.

If there is another message on the tape destined for branch office BO3, it is unnecessary to withdraw the plug from the jack. The operator merely actuates the switch 73 to open momentarily the locking circuit of relay 74 whereupon this relay becomes deenergized and the lamp 99 is extinguished. The deenergization of relay 74 closes through its inner left hand armature and back contact the circuit of lamp 75, and through its right hand armature and back contact connects the test relay 79 to the circuit allotter CA. Relay 76 remains energized and prevents a premature closure of the circuit of the start magnet SM of the transmitter TT1. The connection of the transmitter to the line to the branch office BO3 as soon as the line is idle takes place in the manner described above.

If there is a message on the tape destined for another outgoing channel or circuit allotted to a jack 16 in the switchboard, the plug 15 is withdrawn and restored to its seat, thereby opening the contacts of plug seat switch 72 and deenergizing relays 74 and 76. The plug is then inserted in the jack connected to the desired channel or circuit and transmission of the message follows in the usual manner.

In the foregoing description it was assumed that the selected line, i. e. the line 12 to branch office BO3, was idle when the transmitter TT1 was connected thereto by the associated plug 15 and cord circuit 65. If the line is busy because of a prior connection to another transmitter and cord circuit, the transmitter TT1 is held inoperative until the transmission of the first message is completed and the line is released. If more than two transmitters are connected through their cord circuits to the same line or circuit, the circuit allotter CA renders the transmitters operative one after the other without attention from the operator or attendant.

If the line 12 has already been seized by another transmitter before the transmitter TT1 is plugged into the switchboard, the conductor *j* of the switchboard multiple is connected to ground through the sleeve of the plug 15 of the other transmitter, the winding of the relay corresponding to relay 83 and the contacts of relays corresponding to relays 83 and 84 of the cord circuit 65. The test relay 79 therefore does not operate when ground is applied to the right hand winding thereof by the circuit allotter CA and the circuit of the start magnet SM of the transmitter TT1 is held open by relays 76 and 77 until relays 83 and 84 of the other cord circuit are deenergized after completion of transmission of the prior message. After the line becomes idle, the transmitter TT1 will be rendered operative to transmit over said line as described above upon the first engagement of segment 82 of the circuit allotter with brush 81.

Interoffice transmission with numbering of successive messages

As shown, the system embodying the invention provides means for interposing service code signals such as consecutive numbers between successive messages in connection with transmission to remote offices over duplex circuits or multiplex channels. The service code or numbering mechanism may also be employed in connection with the local branch office lines, if desired, but ordinarily is not required because of the small volume of traffic to such offices.

The switchboard circuit leading to the terminal duplex set TDS and line 14 is shown in the lower half of Fig. 4, the service code signal transmitter or numbering mechanism 36 individual to said line being shown diagrammatically in Fig. 5. Each intercity trunk or multiplex channel is preferably provided with a code transmitter similar to the mechanism 36, the transmitter 34 in Fig. 6 being associated with a channel of the multiplex distributor MD connected to the line 13. The numbering mechanism is arranged to send predetermined code signals immediately preceding or following the transmission of each group of message signals. The code signals may include characters designating the transmission trunk or channel and the remote office, and identifying numbers or characters for identifying successive messages, or other desired characters which may be different for consecutive messages. In this manner the message as received includes arbitrary characters for the purpose of facilitating the tracing of lost or mutilated messages or for other purposes. The code signal transmitter shown in Fig. 5 is of the motor-driven cam switch type described and claimed in the copending application of Dirkes, Hoover and Wheeler, Ser. No. 51,522, filed November 25, 1935, but may be of any suitable type, for example, one in which the code signals are stored in a perforated tape or other storage medium.

In the embodiment of the invention illustrated, when a message transmitter is connected to the

trunk 14 or a channel of the multiplex circuit 13, the associated numbering mechanism automatically transmits code signals of identifying character over the trunk or channel and thereafter the connected transmitter is rendered operative to transmit the message stored in the associated reperforator. The trunk or channel is released by an end-of-message signal and the next message over the same channel is preceded by a different code signal group set up in the numbering mechanism so that each message as received includes distinctive identifying characters or numbers. Secondary storage of signals is preferably utilized in connection with transmission over multiplex channels in order to simplify the switchboard circuits and provide for varying rates of transmission in different parts of the system as required for maximum efficiency in the operation of both exchange apparatus and transmission circuits.

Assuming that a message is to be relayed from branch office BO1 to a remote office connected to the duplex line 14, the message is initially printed and stored at the central office by the combined printer and reperforator RR1 (Figs. 1 and 3) as described above. After noting the destination of the message on the tape, the attendant at the central office plugs the cord circuit 65 associated with the tape transmitter TT1 into the jack 16 allotted to the outgoing line 14, thereby extending the connection to the conductors *k* and *l* of the switchboard multiple and the conductors 110 and 111 (Fig. 4). It is assumed that the monitor printer MPR and the receiving printer at the remote terminal of the duplex line 14 are of the start-stop type and accordingly may be connected directly to the transmitter TT1.

When the plug 15 is inserted in the jack 16, the plug seat switch 72 is closed, thereby lighting the signal lamp 75 and energizing relay 76. If a connection is not already established with the line 14, the test relay 79 becomes energized through a circuit including the brush 81 and the grounded segment 82 of the circuit allotter CA, the right hand armature and back contact of relay 74, resistance 80, the right hand winding of relay 79, the sleeve contacts of plug 15 and jack 16, conductors *l* and 111, switch 112 and winding of relay 113 to battery, whereupon relays 79 and 113 are energized. If the line 14 is busy, the sleeve of the jack 16 will be at a potential indicating "busy" condition as described above and the operation of test relay 79 to initiate the operation of transmitter TT1 will be prevented until the line 14 becomes idle.

Upon the energization of relay 79, relays 83 and 84 become energized through a circuit including the armature and back contact of relay 86, left hand outer armature and back contact of relay 77, right hand armature and back contact of relay 85, left hand winding and armature of relay 79, windings of relays 84 and 83, sleeve contacts of plug 15 and jack 16, conductors *l* and 111, and winding of relay 113. The switch 112 in series relation with relay 113 is provided for the purpose of rendering the channel 14 or the multiple jack circuit equipment associated with terminal duplex set TDS busy if it is desired to prevent any cord circuit from seizing said channel. If the switch 112 is open, the operation of test relay 79 is prevented and the transmitter associated with a cord circuit plugged into the channel 14 will be maintained inoperative. Relay 113, however, is provided with a locking circuit through its left hand armature and front contact so that after the channel has been seized and relay 113 energized, the circuit is not affected by the opening of switch 112 until transmission of the message has been completed and relay 113 is deenergized.

The operation of relay 84 connects the tip circuit of the switchboard multiple through its right hand armature and front contact and the windings of relays 95 and 96 to the transmitting contacts 96 of transmitter TT1. The transmitting circuit is interrupted, however, at the right hand armature and front contact of relay 114 as this relay remains deenergized until the numbering mechanism 36 has completed its function. The energization of relay 113 closes a circuit from ground through its right hand armature and front contact, the left hand armature and back contact of relay 114 and conductor 116 for energizing the clutch magnet 117 of the numbering or service code signal transmitter 36 (Fig. 5), thereby initiating the rotation of the transmitting cam drums of the transmitter.

In the embodiment shown, the numbering mechanism 36 comprises a constantly rotating drive shaft 125 connected through a clutch 126 to the normally stationary cam drum 127. When the clutch magnet 117 is energized, the clutch 126 is engaged and the drum 127 rotates with the drive shaft 125. The clutch 126 is provided with a cam 128 and stop arm lever 129 to disengage the clutch and stop the cam drum 127 in a predetermined start position after the clutch magnet 117 is deenergized. The numbering mechanism further comprises a letters code drum 130, a units code drum 131 and a tens code drum 132, each of said drums being intermittently stepped during the rotation of the transmitting cam drum 127. As shown, a Geneva cam 133 and Geneva wheel 134 are disposed between each pair of drums in such manner that the letters code drum 130 is stepped once for each revolution of drum 127, the units code drum 131 is stepped once for each revolution of drum 130 and the tens code drum 132 is stepped once for each revolution of drum 131.

Each of the rotatable drums is provided with projecting pins or cam members 135 adapted to engage movable contact members 136 having cooperating front and/or back contacts. The operation of the contact members 136 in properly timed relation and in predetermined sequence by the drums 127, 130, 131 and 132 is arranged to send marking and spacing signals to a storage reperforator or the remote printer to print suitable characters which are appended to the message for the purpose mentioned above. The code signals sent automatically during each cycle of operation of the numbering mechanism 36 may be readily changed by properly rearranging the pins 135.

The mechanism 36 further comprises a relay 140 and a restoring switch 141, the latter being used for restoring the units code drum 131 to a predetermined starting position when desired. The tens cam drum 132 is preferably also arranged to permit resetting manually when desired, as for example, by disengaging the Geneva wheel 134 of said drum from the cooperating cam 133, thus permitting the drum to be turned to its starting position as described in the above mentioned copending application of Dirkes, Hoover and Wheeler.

Upon the energization of the clutch magnet 117, the transmitting cam drum 127 rotates and during each rotation, a character or code sig-

nal is transmitted over the conductor 145. Ten revolutions of the cam drum 127 constitute one complete cycle of the numbering mechanism. Each code signal may comprise a start no-current interval, five marking or spacing impulses and a stop or current pulse whereby the signals are adapted to control the ordinary start-stop printer. When battery is connected to the conductor 145, the operating magnet 146 of the monitor printer MPR at the central office and relay 147 of the terminal duplex set TDS are energized, the circuit of said magnet and relay including a resistance 148 which is short-circuited by the closing of contacts 149 of the monitor printer. The monitor printer MPR and relay 147 thus respond to the signals transmitted by the numbering mechanism 36.

As shown, the movable contact members 136 of the transmitting cam drum 127 are connected together and to the conductor 145. Battery is connected to the back contact 150 cooperating with the first or rest contact member 136 of drum 127. Upon the initial movement of drum 127 from its normal position, the circuit including contact 150 is opened thus opening the line during the start interval. This circuit remains open until the drum 127 returns to its initial position. After five successive impulses are sent to the line by the successive operation of the remaining contact members 136 of drum 127, the drum completes one revolution and recloses the line circuit through contact 150 to send the stop pulse. The code signal sent during each revolution of drum 127 is controlled by connecting or removing battery potential from the make contacts corresponding to the second, third, fourth, fifth and sixth contact members 136 of drum 127 in accordance with the setting of code drums 130, 131 and 132. The ten revolutions of drum 127 during each cycle cause drum 130 to make one complete revolution and drum 131 to make one-tenth of a revolution during each cycle of the numbering mechanism whereas the tens code drum 132 is stepped once in ten cycles.

The first five contact members 136 of drum 130 are connected to the make contacts of drum 127 and when actuated are connected to battery through the back contact 151 of the sixth contact 136 of drum 130. In the normal or first position of the code drum 130, the code pins 135 engaging the cooperating contact members 136 of drum 130 connected to the make contacts of drum 127 may be arranged in accordance with the code signal representing the "letters shift." Upon the first rotation of the cam drum 127, a "letters shift" signal will be sent to the line to adjust the printer MPR and the printer at the remote office to print letter characters. During the transmission of the stop and start pulses by contact 150, the letters code drum 130 is stepped to its second position wherein the code representing a character identifying the channel 14 for example is set up on the pins. This character may be the letter "F" where the characters FWA are employed to designate the line 14 to a remote office. Upon the succeeding rotations of drum 127 the signals representing "W", "A" and the "figures shift" are sent to the line under the control of letters code drum 130.

In the sixth position of the letters code drum 130, only the sixth and seventh contact members 136 of drum 130 are actuated by pins 135. The sixth contact member 136 connects battery to the make contacts of drums 131 and 132 through make contact 152 of drum 130. The seventh contact member 136 of drum 130 closes through its make contact 153 the circuit of transfer relay 140. The contact members 136 of transmitting cam drum 127 are thus connected through the back contacts of drum 130 and the armatures and front contacts of relay 140 to the movable contact members 136 of the tens code drum 132 and during the first nine cycles of the numbering mechanism the digit "0" will be sent. After each ten cycles, the stepping of the drum 132 will change the code signal set up from 0 to 1, 2, etc.

After the tens digit has been sent, the stepping of letters drum 130 opens the circuit including make contact 153 and winding of relay 140, whereupon relay 140 becomes deenergized and transfers the sending circuit from drum 132 to drum 131. In its initial position, units code drum 131 is arranged to send a signal representing the digit "1" and during the successive cycles of the numbering mechanism, drum 131 changes the code signal set up from 1 to 2, 3, etc. In this manner the numbering mechanism 36 interposes consecutive numbers from 01 to 99 or (1)00 between consecutive messages.

In the eighth position of the letters code drum 130, the sixth contact member 136 of said drum is restored to normal, thereby breaking the battery connection to the contacts of drums 131 and 132 and connecting battery to the make contacts associated with the first five contact members 136 of drum 130. The drum 130 is then operative to send the "letters shift" signal to the line and, during the ninth and tenth revolutions of transmitting drum 127, to send blank or other desired signals. When the drum 130 is being stepped from its ninth position to its tenth position, the eighth contact member 136 of drum 130 applies ground potential momentarily to conductor 155, thereby energizing relays 114 and 115 (Fig. 4). Relay 114 breaks the circuit of clutch magnet 117 at the left hand armature and back contact of said relay. At this moment cam 128 has advanced so far that stop arm lever 129 does not immediately engage cam 128 and the transmitting drum 127 continues to rotate for almost another revolution. Then the cam 128 engages the stop arm lever 129 when the drum 127 is in its rest position wherein contact 150 engages its associated contact member 136, and drum 130 has been restored to its initial position. When the drum 130 comes to rest at its initial position, the described circuit of relays 114 and 115 is interrupted but the operation of relay 114 closed a locking circuit for said relays through its left hand armature and front contact and the right hand armature and front contact of relay 113 whereby relays 114 and 115 remain energized until transmission of the message has been completed.

The terminal duplex set TDS is conventionally shown in Fig. 4 as comprising a differential line relay 160 having opposed windings connected to the line 14 and an artificial line 161 respectively. The armature of the transmitting relay 147 is connected to the mid-point of the windings of relay 160 so that the relay will transmit positive and negative signaling impulses over the line 14 without affecting the line relay 160. Relay 160 will, however, respond to impulses received over the line 14 to control the receiving reperforator RR6.

The energization of relay 114 as described above disconnects at its right hand armature and back contact the numbering mechanism 36 and con-

nects through the same armature and front contact the monitor printer MPR and terminal duplex set TDS to the transmitting contacts 96 of the tape transmitter TT1. The transmitting circuit includes the windings of marginal relay 86 and relay 95. Relay 95 becomes energized, effects the energization of relays 85, 93, 77 and 74, and initiates the transmission of the message stored by the reperforator RR1 as described above in connection with the retransmission of messages to a local branch office.

The numbering mechanism 36 remains inoperative until the line 14 is seized by one of the cord circuits for the transmission of another message. The second message will be numbered 02 because of the stepping of the units code drum 131 to its second position by the rotation of the drum 130. After nine cycles of operation, the rotation of the units code drum 131 steps the tens drum 132 so that the succeeding message will be numbered 10. In this manner the messages transmitted over the line 14 will be consecutively numbered. Obviously, any desired service code signals may be interposed between the messages and the signals may be produced in various ways by using other types of automatic code signaling devices.

It is desirable to be able to reset the tens and units code drums of the numbering device from time to time in order to number the first message 01 for example at the beginning of each day. The units code drum 131 is reset by closing the switch 141, thereby closing a circuit for energizing the clutch magnet 117 through the sixth contact member 136 and back contact 150 of drum 131 if this drum is on any other position than number one. The drums 127, 130 and 131 are rotated by the drive shaft 125 until the drum 131 reaches its reset for #1 position where the circuit is interrupted at contact 154 through the operation of the associated contact member 136 by a code pin 135. The tens code drum 132 is preferably reset to normal position manually, the Geneva wheel 134 of said drum being longitudinally slidable on the shaft of the drum to effect disengagement of the wheel from the cam 133.

After the numbering mechanism has completed its function, the transmitter TT1 is rendered operative as described above to send the message over the line 14 to the remote office. The end-of-message signal causes the contacts 149 of the monitor printer MPR to close momentarily, thereby short-circuiting the resistance 148 in the transmitting circuit to cause the operation of marginal relay 86. The cord circuit 65 is then restored to normal as described above. It will be noted that if a second cord circuit had seized the line 14 before relays 113 and 114 are deenergized, the transmitter in the second cord circuit would be rendered operative immediately without waiting for the numbering mechanism 36 to function. This is prevented by slow release relay 115 which closes a shunt circuit around relays 113 and 85 to ground through its armature and front contact. The resistance of this shunt circuit is so chosen that relays 113 and 83 will remain operated once they are operated but that the test relay 79 of a second cord circuit will not be energized in series with the winding of relay 113. The line 14 is thus maintained busy for a short interval after relays 113 and 114 become deenergized to prevent a premature seizure of the line by the second cord circuit.

This delay in the connection of another cord circuit to the line 14 serves another purpose also. When the monitor printer MPR is switched to the numbering mechanism 36, the circuit of the magnet 146 of the printer may be opened momentarily by the armature of relay 114 as it moves from its front to its back contact. This interruption of the circuit if of sufficient duration will cause the printer to function as if a "letters shift" signal had been received. It is necessary that the printer complete its cycle and come to rest before the numbering mechanism starts transmission in order to avoid the printing of false characters ahead of the characters transmitted by the numbering mechanism, and this is accomplished by the slow release relay 115.

In the case of a message to be retransmitted over a multiplex channel, for example, of the line 13, the cord circuit is connected through plug 15 and jack 16 to conductors *m* and *n* of the switchboard multiple, thereby extending the connection to the conductors 170 and 171 leading to the control apparatus associated with the multiplex distributor MD (Fig. 6). If the selected channel is busy, the test relay 79 is not energized and the tape transmitter associated with the cord circuit is maintained inoperative as described above. If the channel is idle, a circuit is closed from battery through the winding of relay 172, switch 173 corresponding to switch 112 (Fig. 4), conductors 170 and *n*, sleeve contacts of jack 16 and plug 15, right hand winding of test relay 79, resistance 80 and right hand armature and back contact of relay 76 to ground at the circuit allotter CA whereupon relays 79 and 172 become energized. The energization of relay 172 closes a locking circuit through its left hand armature and front contact that is independent of the switch 173 and closes a circuit through its right hand armature and front contact and the right hand armature and back contact of relay 174 for energizing the clutch magnet 175 of the numbering mechanism 34. The numbering mechanism 34 is similar in construction to the numbering mechanism 36 but is arranged to send characters identifying the associated channel of line 13. During the operation of the numbering mechanism 34, which is similar to that described above in connection with mechanism 36, the transmitting circuit of the tape transmitter TT1 is held open at the left hand armature of relay 176. After the numbering mechanism 34 has completed its cycle, the contacts 176 are momentarily closed, thereby energizing relays 177 and 174. Relay 174 transfers the sending circuit from the numbering mechanism 34 to the transmitter TT1 and slow release relay 177 is a guard relay corresponding to guard relay 115 described above. Instead of transmitting the permutation code signals directly over the line, a reperforator RR1 is provided for perforating a tape which may be fed into the tape transmitter TT1 having transmitting contacts 180 connected to the transmitting segments of the distributor MD and a tape stepping magnet 181 connected to the local segment of the distributor. The transmitter TT1 and its connections to the multiplex distributor MD may be similar to those shown in the patent to Benjamin No. 1,298,440 dated March 25, 1919. It will be noted that the reperforator RR1 is connected in a short intra-office circuit over which signals may be transmitted if desired at a much higher rate than over the channels of the multiplex.

The reperforator RR1 records the message preceded by the service code signals from numbering mechanism 34 on a tape and, upon receiving the

end-of-message signal, closes the contacts 182 in the transmitting circuit to operate marginal relay 86 and release the connection. By providing double storage of signals, at the cord circuit transmitter and at the distributor MD, the circuits are simplified and the several transmitters may each be operated at its most efficient speed. If desired, however, other methods of interconnecting start-stop transmitters to the multiplex channels may be employed.

Incoming messages over the trunk 13, as shown in Fig. 1, are recorded by the reperforator RR5 and subsequently repeated through a selected switchboard circuit, either to local or spillover receiving apparatus or to another office, by the tape transmitter TT5. The incoming messages over the duplexed circuit 14 are likewise stored and repeated by the reperforator RR6 and tape transmitter TT6 through the instrumentality of the associated cord circuit. While only one reperforator is shown for receiving messages over the trunk 13, ordinarily the apparatus shown would be duplicated for each operating channel of each multiplex distributor in the central office. Likewise the receiving equipment shown in connection with the duplexed circuit 14 would be duplicated for each similar circuit terminating at the central office.

Special services

As pointed out above, an auxiliary storing device such as the reperforator RR4 (Figs. 1 and 6) is provided which is accessible through the switchboard at the central office. This reperforator is preferably of the type which both reproduces the printed characters of the message and records the code signals in a form adapted to operate the associated tape transmitter TT4. The tape transmitter TT4 may be connected to the switchboard through a cord circuit similar to those shown in Fig. 3 so that the stored messages may be subsequently repeated over any of the circuits terminating in the switchboard.

The reperforator RR4 may be employed as a spillover storage device to clear out messages received by the reperforators RR1, RR2, RR3, RR5 and RR6, when traffic conditions are such that these messages cannot be relayed promptly and also for handling deferred messages and other special services. In order to transfer a message to the reperforator RR4, the plug 15 is inserted into the jack 16 connected to the conductors *a* and *b* of the switchboard multiple. Upon the insertion of the plug in the jack, a circuit is closed through the winding of relay 185 (see Fig. 6), switch 186 corresponding to switch 112 of Fig. 4, conductor *b* of the switchboard multiple, sleeve contacts of plug 15 and jack 16, right hand winding of test relay 79, resistance 80 and right hand armature and back contact of relay 74 to ground at the circuit allotter CA. If the reperforator RR4 is not busy, the test relay 79 becomes energized as described above and initiates the operation of the associated tape transmitter to send the message signals over the tip circuit of the connecting plug and conductor *a* of the switchboard multiple.

The energization of relay 185 closes, through its left hand armature and front contact, a locking circuit that is independent of the switch 186 and, through its right hand armature and front contact, the transmitting circuit from the contacts of the tape transmitter to the operating magnet 187 of the reperforator RR4. Relay 188 associated with reperforator RR4 is normally energized through a circuit including resistance 189, winding of relay 187 and the right hand armature and back contact of relay 185. Upon the energization of relay 185 as described above, relay 188 becomes deenergized and closes through its right hand armature and back contact the circuit of signal lamp 190. The lighting of signal lamp 190 calls the attention of the operator or attendant at the central office to the message stored in the reperforator RR4. Relay 188 closes through its left hand armature and back contact a short-circuit around its own winding so that the lamp 190 remains lighted until the switch 191 is opened by the attendant. When the end-of-message signal is received by the reperforator RR4, the contacts 192 are closed, thereby short-circuiting the resistance 189 and initiating the restoration of the cord circuit as described above. Relay 185 becomes deenergized thereby interrupting the transmission circuit to reperforator RR4. When the attendant clears out the message stored by the reperforator RR4, the switch 191 may be opened to permit relay 188 to become energized thereby extinguishing the lamp 190.

The multiple jack equipment associated with the local receiving position is identical with that described above at the spillover position except that a printer RP4 is provided instead of the reperforator RR4. Incoming messages for delivery from the central office are relayed through the switchboard to the receiving printer RP4 in precisely the same manner as messages are transferred to the reperforator RR4, and the messages are printed and attached to a message blank or prepared for delivery in any desired manner.

Multiple storage

In the system described above for the purpose of illustrating certain features of the invention, single storage of message signals is utilized except in the case of retransmission over a multiplex channel; i. e., the signals are stored or recorded only once in the central office. Since start-stop transmitters are provided at the branch offices, secondary storage is employed where the signals are repeated over a multiplex channel of a circuit having synchronous distributor apparatus.

In the application of reperforator-switching systems to the practical requirements of telegraph service, it may sometimes be desirable for operating or other reasons to utilize double storage in connection with transmission into both multiplex channels and circuits having start-stop synchronous terminal equipment. In that case the outgoing lines 10, 11, 12 and 14 are also provided at the sending sides with storage-transmitters of the same character as described above in connection with the multiplex channels of line 13 except that the tape transmitters are of the type designed to operate start-stop printers and may be similar to the transmitters TT1, TT2 and TT3. The operation of this equipment would be similar to that described above in connection with transmission over the line 13.

One advantage of this arrangement resides in the fact that the transmission rates between connected transmitters and reperforators located in the central office are not subject to the speed limitations governing the operation of apparatus connected by long lines and therefore may be materially higher than the rates of transmission on some or all of the inter-office circuits, as pointed out above in connection with transmission over multiplex channels (Fig. 6).

A further modification embodying the inven-

tion and involving triple storage of message signals is illustrated diagrammatically in Fig. 7. In this system, intermediate storage reperforators are provided between the receiving reperforators and the reperforators associated with the outgoing lines. Such an arrangement would be desirable, for example, in a large office where a switching operator or group of operators could not be expected to route all messages directly to the proper outgoing line or channel.

As shown, the office or exchange is divided into sections A, B and C. The receiving section A is divided into a multiplex group 200, a trunk and way simplex group 201, a simplex city group 202 and a city or local perforating and relay group 203. At each group of the receiving section a switchboard section 204 is arranged for relaying messages. The group 200 contains printer reperforators and tape transmitters as described above in connection with the system shown in Figs. 1–6 for storing messages received over multiplex channels terminating at the office. In general, the storage, repeating and switching units may be of the same character as those already described. The group 201 of the receiving section A contains printer reperforators and tape transmitters connected to incoming simplex trunks and way circuits and group 202 contains similar apparatus for storing and repeating messages from local or city offices. The group 203 contains the local sending equipment such as keyboard perforators and tape transmitters.

The intermediate section B of the exchange is divided into three groups 205, 206 and 207. Group 205 contains storing and repeating units for relaying messages over simplex trunks and ways or destined for manual relay or local delivery. Group 206 contains similar equipment for handling local or city traffic and group 207 contains storing and repeating equipment for handling special messages, such as spillover or deferred messages, misroutes, etc. The reperforators in each group of the intermediate section B may be connected to calling lines from switchboard 204 by finder switches 208 in order to reduce the number of storing and repeating units required as in the case of concentrating systems in general use for connecting an idle one of a group of printers or receiving units to a calling line. A switchboard section 209 is provided for each of the groups in the intermediate section B for selection of the proper relay channel by the intermediate operator.

The sending section C of the exchange is divided into groups 210, 211, 212 and 213. The multiplex sending group 210 is accessible through multipled jacks of the switchboard sections 204 and contains reperforators and tape transmitters for storing and repeating messages over outgoing multiplex channels. The groups 211 and 212 contain similar equipment for relaying messages over simplex trunks and way circuits and over simplex lines to local or city offices, respectively. The group 213 contains printers for recording local messages for delivery or manual retransmission. Each of the groups in the sending section C may be provided with finder switches 214 similar to the switches 208, the finder switches in groups 210, 211 and 212 being each individual to a multiplex channel, a simplex trunk and a simplex local circuit selected by the A operator, respectively.

In the system illustrated, the switching operator at section A is required to differentiate between local or city messages and messages to be relayed over outgoing trunks or channels. In the case of messages to be relayed over multiplex channels, the operator is further required to select the proper channel, the multiplex sending group 210 being accessible through the switchboard sections 204. In a large exchange, an operator could not be expected to route all messages to the proper sending circuits and in the arrangement shown, the messages to be retransmitted over simplex trunks and way circuits and local simplex lines terminating at the exchange are routed to groups 205 and 206 at the intermediate section B. Likewise deferred or spillover messages are routed to group 207 at the intermediate section. If desired, the messages to be relayed over multiplex channels could also be routed to the intermediate section B but in most offices a large proportion of the load is carried by the multiplex channels and therefore the apparatus required at the intermediate position is greatly reduced by routing such messages directly from the receiving section A to the sending section C.

The switching operator at group 205 of the intermediate section B is required to select the proper simplex trunks individually at group 211 of the sending section C and to select group 213 in the case of messages to be manually retransmitted. The switching operator at group 206 of the intermediate section is required to select the proper local or city circuit for local messages and the operator at group 207 handles spillover messages, misroutes, etc., as indicated diagrammatically. If an A operator cannot determine the proper routing for a particular message or obtain access to the desired channel within a reasonable time, such messages may also be routed to group 207 thus reducing the delay in transmitting other messages received subsequently on the same reperforator.

It will be apparent that by providing an intermediate switching section B, the size of the switchboard at the receiving position A is reduced and the duties of the A operator in respect to routing of messages are brought within reasonable limits thereby minimizing the chances of delays and errors in relaying messaages. The system has the further advantage that a temporary overloading of one of the simplex trunks or city circuits does not result in a delay in clearing out a message destined for the overloaded circuit from the transmitter at the receiving position with a consequent delay in the transmission of other messages stored by the associated reperforator. The occurrence of such delays in clearing traffic from the receiving reperforators is likely to result in an accumulation of traffic for other trunks and cause temporary overloading which is reflected back upon the transmitters at the receiving position. Thus an abnormal increase in messages awaiting transmission at the receiving position is likely to occur. Under ordinary conditions this difficulty is avoided by storing messages destined for overloaded circuits at the intermediate section of the exchange as described above.

As pointed out above, the invention is not limited to the specific types of storing, repeating or switching apparatus herein described. Many changes in the apparatus and variations of the systems disclosed herein will be obvious to those skilled in the art and may be made without departing from the scope of the invention as set forth in the appended claims.

We claim:

1. In a telegraph system, a central station, a plurality of telegraph channels terminating at said central station, a character storage device individual to each incoming channel for storing character signals received thereover, a plurality of outgoing telegraph channels at said central station, a character storage device associated with each outgoing channel, means for transmitting characters from any of said first mentioned storage devices to any of said second mentioned storage devices and means for transmitting characters from each of said second mentioned storage devices over its associated outgoing channel.

2. In a telegraph system, a central station, a plurality of telegraph channels terminating at said central station, a character storage device individual to each incoming channel for storing character signals received thereover, a plurality of outgoing telegraph channels at said central station, a character storage device associated with each outgoing channel, manual switching means for connecting any of said first mentioned storage devices to any of said second mentioned storage devices for transmitting characters from said first mentioned storage devices to said second mentioned storage devices, means controlled by predetermined character signals so transmitted for interrupting transmission of characters from said first mentioned storage devices and means for transmitting characters from each of said second mentioned storage devices over its associated outgoing channel.

3. In a telegraph system, a central station, a plurality of telegraph channels terminating at said central station, a character storage device individual to each incoming channel for storing characters received thereover, a plurality of outgoing telegraph channels at said central station, a character storage device associated with predetermined ones of said outgoing channels, switching means for successively connecting the first mentioned storage devices to said second mentioned storage devices or directly to an outgoing channel for transmitting characters from said first mentioned storage devices to said second mentioned storage devices or to said outgoing channel, means controlled by predetermined character signals so transmitted for interrupting transmission of characters from said first mentioned storage devices and means for transmitting characters from each of said second mentioned storage devices over its associated outgoing channel.

4. In a telegraph exchange system, an office, incoming and outgoing lines terminating thereat, signal storage devices associated with the incoming lines, other signal storage devices associated with the outgoing lines, means for repeating the signals stored in one of the storage devices associated with incoming lines and for storing said signals in one of said other signal storage devices and means for repeating the signals stored in said one of said other signal storage devices over an outgoing line.

5. In a telegraph exchange system, an office, incoming and outgoing lines terminating thereat, a receiving reperforator operable over one of said incoming lines, means including a second reperforator for transmitting signals over an outgoing line at a predetermined rate and means for operating said second reperforator at a different rate in accordance with the signals recorded by the first mentioned reperforator.

6. In a telegraph exchange system, an office, incoming and outgoing lines terminating thereat, a receiving reperforator operable at a certain rate over one of said incoming lines in accordance with message signals, means including a second reperforator for transmitting signals over an outgoing line and means for operating said second reperforator at a rate higher than said first mentioned rate in accordance with the message signals recorded by the first mentioned reperforator.

7. In a telegraph exchange system, an office, an incoming line and a plurality of outgoing lines terminating thereat and means including selective switching devices for repeating message signals received over said incoming line over any one of said outgoing lines, said means further including a receiving reperforator operable at a predetermined rate by signals transmitted over said incoming line and a second reperforator associated with the selected outgoing line operable at a rate higher than said predetermined rate in accordance with signals stored by said receiving reperforator.

8. In a telegraph exchange system, an office, incoming and outgoing lines terminating thereat, a group of signal storage devices associated with the incoming lines, a second group of signal storage devices associated with the outgoing lines, a third group of signal storage devices, means for repeating and storing signals from the first group of signal storage devices to the second group, and means for repeating and storing signals from the first group of signal storage devices to the third group and for thereafter storing said signals in the second group of signal storages devices.

9. In a telegraph system, a central station, a plurality of incoming telegraph channels terminating at said central station, character storage devices associated with said incoming channels for storing characters received thereover, a plurality of outgoing channels at said central station, character storage devices associated with predetermined of said outgoing channels, means for transmitting message groups of characters from said first mentioned storage devices to said second mentioned storage devices, means for adding supplemental character signals to each message group transmitted by said first storage devices and means for transmitting characters from each of said second mentioned storage devices over its associated outgoing channel.

10. In a telegraph system, a central station, a plurality of incoming telegraph channels terminating at said central station, a plurality of character storage devices for storing characters received thereover, a plurality of outgoing channels at said central station, character storage devices associated with predetermined ones of said outgoing channels, means for initiating the transmission of message groups of characters from said first mentioned storage devices to any of said second mentioned storage devices, means controlled by predetermined character signals so transmitted for interrupting transmission from said first mentioned storage devices at the end of each message group and means for transmitting characters from each of said second mentioned storage devices over its associated outgoing channel.

11. In a telegraph system, a central station, a plurality of incoming telegraph channels terminating at said central station, a plurality of character storage devices for storing character signals received thereover at one rate, a plu-

rality of outgoing telegraph channels at said central station, character storage devices associated with predetermined ones of said outgoing channels, means for transmitting characters from said first mentioned storage devices to said second mentioned storage devices at a different rate, means for automatically stopping said transmitting means and means for transmitting characters from each of said second mentioned storage devices over its associated outgoing channel.

12. In a telegraph system, a central station, a plurality of telegraph channels terminating at said central station, a plurality of character storage devices for storing characters received thereover, a plurality of outgoing telegraph channels at said central station, character storage devices associated with predetermined ones of said outgoing channels, means for transmitting message groups of characters from said first mentioned storage devices to said second mentioned storage devices, a signal transmitter associated with each of said second mentioned storage devices for preceding said transmission of each message group with a group of supplemental character signals and means for transmitting characters from each of said second mentioned storage devices over its associated outgoing channel.

13. In a telegraph exchange system, a central station, outgoing simplex and multiplex telegraph lines from said station, character storage devices associated with certain of said outgoing lines, a receiving character storage device at said station, selective switching means for associating said last mentioned device with any desired one of said other storage devices and means including said receiving character storage device for transmitting signals over either a simplex line or a channel of a multiplex line.

14. In a telegraph system, a station having telegraph lines terminating thereat, receiving reperforator-transmitters for storing and repeating incoming signals, reperforator-transmitters on the sending sides of said lines and reperforator-transmitters arranged to repeat signals from the receiving reperforator-transmitters to the other reperforator-transmitters.

15. In a telegraph exchange system, a station having telegraph lines terminating thereat, a receiving position for handling all incoming messages, an intermediate repeating position and a sending position for outgoing traffic, reperforator-transmitters for storing and repeating signals at each of said positions and selective switching means for interconnecting the reperforator-transmitters at the receiving position with a desired channel at either the intermediate or sending positions and for interconnecting the intermediate position with a desired channel at the sending position.

16. In a telegraph exchange system, a station having telegraph lines terminating thereat, receiving reperforator-transmitters for storing and repeating incoming messages, local reperforator-transmitters and sending reperforator-transmitters allocated to particular printers or channels, selective switching means for connecting the receiving reperforator-transmitters to a desired one of the local or sending reperforator-transmitters and selective switching means for connecting a local reperforator-transmitter to a desired one of the sending reperforator-transmitters.

17. In a telegraph exchange system, a plurality of transmitters, reperforator-transmitters for storing and repeating character code signals from said first-mentioned transmitters, outgoing telegraph lines, other reperforator-transmitters for storing and repeating character code signals over said outgoing lines and means for connecting any of said first mentioned reperforator-transmitters to any of said other reperforator-transmitters.

18. In a telegraph system, a central station, outgoing simplex and multiplex telegraph lines from said station, a reperforator-transmitter for storing and repeating signals received over one of said lines, selective switching means for associating said reperforator-transmitter with any desired one of said outgoing simplex lines or channels of the multiplex lines, means including said reperforator-transmitter for transmitting signals over the selected one of said lines or channels and means operable over a selected line for stopping transmission and releasing the line.

19. In a telegraph system, a central station, telegraph circuits terminating at said central station, start-stop transmitters connected to said circuits, means at said central station for storing and repeating a plurality of character code signals received over one of said circuits, selective switching means for connecting said storing and repeating means to another of said circuits to transmit said signals thereover and means operable over said other circuit for controlling said repeating means.

20. In a telegraph system, a central station provided with printers and character code signal storage devices, telegraph lines terminating at said station, means for operating said storage devices over said lines and selective switching means for connecting any of said storage devices to one of said printers or to an outgoing line.

21. In a telegraph system, a central station provided with printers and with character code signal storage devices individual to incoming telegraph lines, transmitters associated with said storage devices and selective switching means for connecting any of said transmitters to one of said printers or to an outgoing line.

22. In a telegraph system, a central station provided with start-stop printers, branch offices provided with start-stop transmitters, telegraph lines connecting said branch offices to said central station, a multiplex telegraph line from said central station to a remote station, a multiplex distributor associated with said multiplex line, reperforator-transmitters individual to said first mentioned lines at said central station, means including said start-stop transmitters for controlling said reperforators and selective switching means for connecting said transmitters either to the central office printers or to a channel of the multiplex distributor, as desired.

23. In a printing telegraph exchange system, a plurality of telegraph channels, transmitters for sending message groups of signals over certain of said channels, signal storing means associated with the receiving ends of said channels, a transmitter individual to the signal storing means associated with each of said channels, manually operable switching means for connecting said last mentioned transmitters to any selected channel for relaying the signals and means including a test relay individual to each of said last mentioned transmitters for preventing the operation of the associated transmitter when the selected channel is busy.

24. In a printing telegraph exchange system, a plurality of telegraph channels, transmitters for sending message groups of signals over certain

of said channels, signal storing means associated with the receiving ends of said channels, repeater-transmitters associated with said signal storing means, manually operable switching means for connecting said last mentioned transmitters to any selected channel for relaying the signals and busy-test means including a sequential circuit closing device for rendering the transmitters associated with the signal storing means operative in sequence when more than one is connected at the same time to the same selected channel.

25. In a printing telegraph exchange system, a plurality of telegraph channels, transmitters for sending message groups of signals over certain of said channels, signal storing means associated with the receiving ends of said channels, a transmitter individual to each of the signal storing means associated with said channels, manually operable switching means for connecting said last mentioned transmitters to any selected channel for relaying the signals, means for automatically rendering a connected transmitter operative after the switching means has been operated, means for stopping said transmitter and disconnecting the same from the selected channel when transmission of the message is completed and signaling means for indicating the commencement and completion of the transmission of each message.

26. In a printing telegraph exchange system, a plurality of telegraph channels, signal storing means associated with the receiving ends of said channels, a transmitter individual to each of the signal storing means associated with the respective channels, manually operable switching means for connecting said last mentioned transmitters to any selected channel for relaying the signals and means in series with the transmitting circuit through the contacts of said switching means for automatically stopping the transmitter if the selected channel is accidentally opened or grounded.

27. In a printing telegraph exchange system, a transmitter, a storing device for storing message signals connected to said transmitter, a second transmitter associated with said storing device for relaying the signals, a receiving printer, means for rendering said second transmitter operative upon connection to said receiving printer and means including said receiving printer for stopping said second transmitter at a predetermined point.

28. In a printing telegraph exchange system, a transmitter, a storing device for storing message signals connected to said transmitter, a second transmitter associated with said storing device for relaying the signals, a receiving printer, means for rendering said second transmitter operative upon connection to said receiving printer and means including said receiving printer for stopping the transmitter upon reception of a predetermined code signal by the receiving printer.

29. In combination with a tape having a plurality of groups of message signals recorded thereon, a tape transmitter for repeating the signals recorded on the tape, a plurality of telegraph channels, selective switching means for connecting said tape transmitter to any one of said channels, means operable over the selected channel for initiating the operation of the transmitter and means for automatically stopping the tape transmitter at the completion of the transmission of each group of message signals.

30. In a telegraph exchange system, a transmitter, a plurality of transmission channels, receiving devices on the remote ends of said channels, selective switching means for connecting said transmitter to any desired one of said channels and means including the connected receiving device for controlling the operation of the transmitter upon the reception of a predetermined code signal.

31. In a telegraph exchange system, a plurality of transmission channels, guard means for indicating the busy or idle condition of each channel, selective switching means for selecting a desired one of said channels and for rendering the same busy and means for manually rendering any of said channels busy when desired.

32. In a telegraph exchange system, an office, incoming and outgoing lines terminating thereat, means for interconnecting said lines and for repeating code signals over a selected outgoing line, said means including reperforators associated with the incoming lines to store code signals in mechanical form, signal storing means common to all of the outgoing lines for storing code signals when the selected line is busy and means for operating said storing means in accordance with the signals stored by any of said reperforators.

33. In a telegraph exchange system, a central station, incoming lines and outgoing lines terminating thereat, synchronous multiplex channels on said outgoing lines, multiplex storage transmitters for each of said multiplex channels, means for transmitting start-stop signals over certain of said incoming lines and multiplex signals over others of said lines, switching means arranged to connect any one of said incoming lines to any one of said multiplex channels and means including said multiplex storage transmitters for repeating signals from any of the incoming lines over said multiplex channels.

ROLLA F. BLANCHARD.
WILLIAM B. BLANTON.
HARRY L. BROWNE.