April 10, 1962 P. C. KOOMEY ET AL 3,028,881

PRESSURE ACCUMULATOR APPARATUS

Filed Nov. 17, 1960 2 Sheets-Sheet 1

Fig. 1

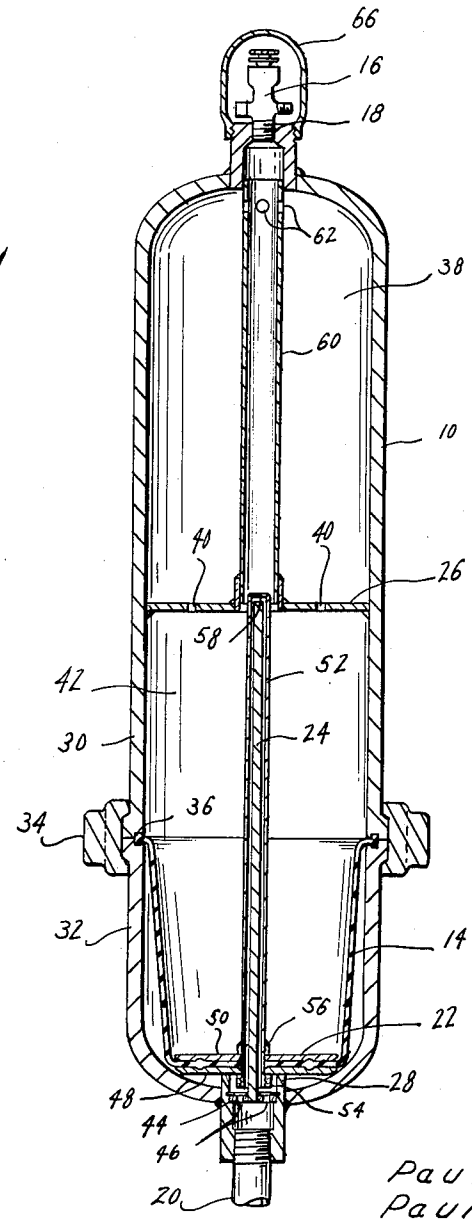

Paul C. Koomey
Paul C. Hudson
INVENTORS

BY James F. Weiler
Jefferson O. Gelley
William A. Sloat
Paul L. DeVorter II
ATTORNEYS

April 10, 1962 P. C. KOOMEY ET AL 3,028,881

PRESSURE ACCUMULATOR APPARATUS

Filed Nov. 17, 1960 2 Sheets-Sheet 2

Fig. 2

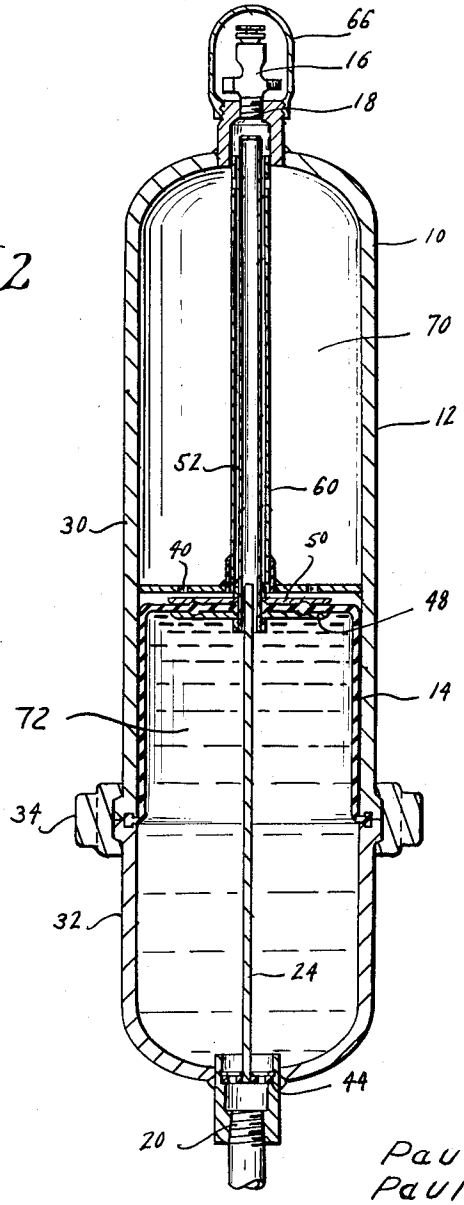

Paul C. Koomey
Paul C. Hudson
INVENTORS

BY James F. Weiler
Jefferson D. Gilly
William A. Stout
Paul L. DeVeaster II
ATTORNEYS

United States Patent Office 3,028,881 Patented Apr. 10, 1962

3,028,881
PRESSURE ACCUMULATOR APPARATUS

Paul C. Koomey and Paul C. Hudson, Houston, Tex., assignors to Stewart and Stevenson Distributing Company, Houston, Tex., a corporation of Texas

Filed Nov. 17, 1960, Ser. No. 70,051
5 Claims. (Cl. 138—30)

The present invention relates to an improvement in a pressure accumulator apparatus, and more particularly relates to such a pressure accumulator in which the movement of the flexible partition is guided and controlled.

Pressure accumulators for storing fluid energy of the desired volume and pressure until the stored energy is required are generally provided with a flexible partition such as a diaphragm, bag, or bladder which separates a compressible gas from an incompressible liquid in the accumulator body. However, the flexible partition or wall between the gas and liquid is subjected to high pressures and continuous flexing between the gas and liquid and the accumulator body which consequently shortens the life of the flexible partition. Furthermore, since the conventional accumulator diaphragm or separator bag is flexible it provides an unstable partition which is subject to continual movement and wear. The present invention is directed to improvements in a pressure accumulator by providing a guide assembly for the flexible partition.

It is therefore an object of the present invention to provide a guide assembly for a flexible partition in a pressure accumulator which will control the limit of travel of the flexible partition.

A further object of the present invention is the provision of a guide apparatus for the diaphragm or separator bag of a pressure accumulator which stabilizes the flexible partition between compressible and incompressible fluids.

A still further object of the present invention is the provision of a guide apparatus for accumulator partition including a rod in the accumulator body having a slidable connection thereon which is connected to the flexible partition.

Yet a further object of the present invention is the provision of a guide assembly in a pressure accumulator including a guide rod on which a plate connected to the flexible partition is sealingly slidable thereby reducing the area of the flexible partition and also preventing wear and pinching of the flexible partition against the body of the accumulator.

A still further object of the present invention is the provision of a guided partition in a pressure accumulator and a guide assembly which includes stops on either side of the partition thereby limiting the travel of the partition in either direction so as to prevent excessive stretching of the partition.

Yet a further object of the present invention is the provision of a guide assembly for a flexible diaphragm in an accumulator which includes a rigid plate secured to the center of the diaphragm and which is attached to a sleeve which is slidable on a guide rod in the accumulator and stops on either side of the plate to limit the travel of the plate and thus the diaphragm.

Other and further objects, features and advantages will be apparent from the following description of a presently preferred embodiment of the invention, given for the purpose of disclosure, and taken in conjunction with the accompanying drawings, where like character references designate like parts throughout the several views, and where—

FIGURE 1 is an elevational view, in section, illustrating the apparatus according to the present invention in position in which the accumulator is empty and open to atmospheric pressure, and

FIGURE 2 is a view similar to FIGURE 1 illustrating the apparatus according to the present invention in position filled with liquid and charged with gas.

Referring now to the drawings, the reference numeral 10 generally designates the pressure accumulator apparatus of the present invention. As is conventional the apparatus 10 generally includes a cylindrical body 12, a flexible partition here shown as a diaphragm 14 for separating a compressible gas such as nitrogen from the incompressible liquid, a gas valve 16 in the accumulator gas opening 18 and an accumulator liquid opening 20 for admission and exit of the incompressible liquid which is stored under pressure in the accumulator.

The present invention is directed to guiding, controlling, and limiting the direction of movement of the flexible partition 14, here shown by way of example only as diaphragm 14. Of course, the flexible partition 14 may be in the form of a separator bag, or any type of elastic separator and may be made out of any conventional material such as one of the various rubber synthetics. The guide assembly generally includes a guide assembly 22 secured to the flexible partition 14 and sealingly slidable up and down in the accumulator body 12 in accordance with the existing pressure conditions applied on the opposite sides of the diaphragm 14. Stops 26 and 28 are provided, one on one side and one on the second side of the flexible partition 14 to limit the travel in either direction. Of course the stops 26 and 28 here shown could be omitted, if desired, and the ends of the accumulator, one on each side of the flexible partition 14, could serve as stops.

For convenience of securing the flexible partition 14 or diaphragm to the body 12, the body 12 consists of an upper tubular shell 30 abutting and held to a lower tubular shell 32 by a flange assembly 34. Upper and lower shells 30 and 32 each have an opening in the shell wall to form a circular groove 36 which when secured together may enclose and secure the outer periphery of the diaphragm 14 to the body 12 of the accumulator. Of course, any desired means of securing the flexible partition 14 in the body 12 may be used.

Preferably, when using a diaphragm type flexible partition, the outer periphery of the partition 14 or diaphragm should be spaced equal distance from and between the stops 26 and 28 thereby reducing the area of the flexible partition 14 that is required and thereby reducing the area of the element which is most subject to wear and deterioration.

The stop 28 is preferably located adjacent the fluid opening 20 and may be in the form of a tube for convenience in manufacture. Of course, this stop can be omitted by allowing the guide assembly 22 to contact and be stopped by the inner wall of the lower end of the shell 32.

The stop 26 is preferably positioned spaced from the gas opening 18 to provide a chamber 38 above the stop to provide an adequate supply of compressible gas so as to provide a sufficient gas charge to insure that there is sufficient charge acting on the last drop of fluid as it leaves the fluid opening 20 and the gas has expanded and fills the entire accumulator. It is to be noted that the stop 26 includes a plurality of openings 40 for the passage of gas from compartment 38 to compartment 42. Preferably stop 26 is a circular plate welded to the body 12 to support the guide assembly 22 as is more fully described hereinafter. Thus as noted in FIGURES 1 and 2 the stops 26 and 28 control the limit of travel of the flexible partition 14 in either direction thereby preventing excessive stretching of the partition and reducing the wear and prolonging the life of the flexible partition 14.

And as previously mentioned a guide assembly 22 which is slidably supported on a rod 24 guides the movement

of the flexible partition 14 thereby providing a stable separator between the gas and liquid and prevents flexing, pinching and wear on the flexible wall 14 at the point of greatest movement of the partition 14. The rod 24 may be secured at one end adjacent the fluid opening 20 by support member 44 which includes a plurality of openings 46 for the passage of liquid into and out of the body 12.

The guide assembly 22 is provided sealingly slidable on the rod 24 and secured to the diaphragm 14 in any suitable manner. Preferably, the guide assembly 22 includes two circular metal plates 48 and 50 sandwiched about the inner portion of the flexible diaphragm 14. The plates 48 and 50 are preferably secured about a sleeve 52 by a threaded nut 54 and shoulder 56. Preferably, the plates 48 and 50 are made as large in diameter as possible but leaving an adequate clearance between the periphery of the plates 48 and 50 and the inside of the body 12 so as not to bind or unduly flex the partition 14 as the plates 48 and 50 move upward and downward. However, by making the plates as large as possible, the area of the partition 14 is reduced thereby reducing the area of the part that most easily wears out. Furthermore, the plates insure a more stable partition between the gas and the liquid. The sleeve 52 is slidable on the rod 24 and includes a closed end 58 thus slidingly supporting the guide assembly 22 as it moves upward and downward and end 58 prevents and seals off the gas from the liquid without requiring a pressure seal which would be subjected to wearing out and require replacement. In addition a tubular support member 60 may be provided in the compartment 38 secured at one end adjacent the opening 18 and secured to the stop member 26 at the other end and positioned to elescopically receive the sleeve 52 as the assembly 22 moves upwardly as shown in FIGURE 2. Openings 62 are provided in the tubular support 60 for passage of gas between compartment 38 and opening 18. Thus, a telescopically slidable structure is provided to support the guide assembly 22 as it moves from the position shown in FIGURE 1 to the position shown in FIGURE 2. Of course, the plates 48 and 50 could be provided to sealingly slide on the rod 24 if desired; however, the sleeve 52 provides desirable support for the guide assembly 22 in view of the pressures involved and prevents the plates from binding on the rod 24.

It is noted that since the circular plates 48 and 50 enclose the flexible diaphragm 14 they protect the diaphragm 14 as shown in FIGURES 1 and 2 from ordinary wear and pinching against the stops 26 and 28 and limit the travel of the diaphragm in either direction as the plates themselves contact the stops 26 and 28. It is further noted that since the circular plates 48 and 50 replace and reduce the area of the flexible diaphragm or partition 14 that is exposed to flexing and wear the life of the diaphragm 14 is increased. Furthermore, it is noted that the guide assembly 22 provides a more stable wall or partition between the gas and the liquid in the accumulator body 10 than is found in the conventional separator bag type accumulator. Thus, the guide assembly increases the life of the flexible partition 14 by preventing excessive stretching and reduces wear and pinching on the partition.

In use, the accumulator is shown in FIGURE 1 as being empty and open to atmospheric pressure. For storing fluid energy for use, the accumulator is connected as is conventional in a system whereby the cover 66 is removed, the valve 16 is connected to a gas supply, normally nitrogen, and the opening 20 is connected to a fluid system such as oil or other incompressible fluid whereby the incompressible liquid can be stored under pressure to later provide a useful work force. Preferably, the accumulator would be charged with gas which would enter the valve 16, go through the opening 18 into the upper compartment 38 through ports 62 and below the stop member 26 through the ports 40 and act on the upper side of the diaphragm 14. The guide assembly 22 would be in the position as shown in FIGURE 1 with the exception that the diaphragm 14 would be fixed outwardly against the inner wall of the lower shell 32 similar to the flexing shown in FIGURE 2. Then as liquid is pumped in through the opening 20 into the lower part of the accumulator 10 below the flexible partition 14 the gas above the flexible partition 14 would be compressed and the slide assembly 22 would slide upwardly on the rod 24. It is to be noted that the moving plates 48 and 50 securely hold and guide the point of greatest movement of the flexible partition 14 and thereby prevent unstable movement at this flexible portion of the partition and eliminate undue flexing and wear during the up and down movement at this point of greatest flexibility and movement. The guide assembly 22 continues to move upward compressing the gas into compartment 38 until the upper plate 50 contacts and is stopped by stop 26. At this point the flexible diaphragm 14 and the guide assembly 22 will be in the position as shown in FIGURE 2. Thus it is noted that the upward movement of the diaphragm 14 is thus stopped preventing excessive stretching of the diaphragm and it is noted that the plate 48 and not the diaphragm 14 makes contact with the stop member 26 to prevent wear and pinching of the diaphragm on metal contact.

Thus as the guide assembly moves upward, the tubular sleeve slides upward on rod 24 and thus guides and supports the plates 48 and 50 which are secured to the sleeve 52. As the sleeve 52 further moves upwardly it telescopes into the interior of the tubular support 60 thus insuring that the guide assembly 22 is securely supported as it is moved upward and downward under high pressures. Of course, the support 60 could be omitted and the rod 24 could be extended to the upper end of the body 12. In that case a sliding seal would have to be provided between sleeve 52 and rod 24. In the preferred arrangement shown the end 58 on the sleeve 52 provides a seal between the gas and the liquid through the sliding assembly 22. This seal is permanent and need not be periodically replaced.

Referring now to FIGURE 2 the gas 70 under pressure acts as a dynamic force to maintain pressure in the accumulator on the liquid 72 beneath the diaphragm 14 and to force out that liquid when the system to which the accumulator is connected permits such discharge.

Thus as the system on which the accumulator 10 is connected permits, the compressed gas 70 above the flexible diaphragm 14 acts against the fluid 72 beneath the diaphragm 14 and pushes it out of the opening 20. Thus the guide assembly 22 moves downwardly on the rod 24 as the sleeve 52 telescopically moves out of the support member 60 and down the rod 24 and thereby supports and guides the plates 48 and 50. When the plate 50 reaches the lower end of the accumulator body 12 it encounters and is stopped by stop member 28 to limit the travel of the flexible diaphragm in its lower position. Thus the guide assembly moves up and down on the rod 24 by means of the sleeve 52 which is supported by the rod 24 when the assembly 22 is in the lower end of the accumulator and is supported and guided by the support member 60 when the accumulator is filled with liquid 72 and the assembly 22 is in an up position.

Thus the guide assembly of the present invention prevents excessive stretching of the flexible partition 14 as it moves from one extreme position to its other extreme position on operation of the accumulator and also prevents wear and pinching of the partition or bag by the fact that the plates 48 and 50 make the contact of each limit of travel and the flexible partition 14 is not subjected to pinching and wearing against the metal. Furthermore, the plates 48 and 50 provide a stable separator wall between the gas and liquid in the accumulator proventing additional flexing and wear on the partition wall which is likely to occur in conventional separator bags. In addition, it is noted that by the use of this invention the area of the flexible partition 14 that is exposed to flexing

may be reduced to a minimum thereby reducing the size of the component of the accumulator that is most subjected to wear and replacement.

The present invention, therefore, is well adapted to carry out the objects and attain the ends and advantages mentioned as well as others inherent therein. While a presently preferred embodiment of the invention is given for the purpose of disclosure, numerous changes in details of construction and arrangement of parts may be made which will readily suggest themselves to those skilled in the art and which are encompassed within the spirit of the invention and the scope of the appended claims.

What is claimed is:

1. A fluid accumulator comprising, a body, a diaphragm in said body, the outer periphery of said diaphragm connected to said body and separating the body into two fluid compartments, a rod secured internally of said body and passing through said diaphragm, guide means including a plate secured to each side of the diaphragm, said guide means movable in the body on either side of the connection of the diaphragm to the body, said guide means sealingly slidable on said rod, and stop means positioned on each side of the guide means and positioned to contact one of said plates thereby limiting the travel of said guide means and diaphragm in either direction.

2. The invention of claim 1 wherein the stop means are equally spaced from the point of connection of the diaphragm to the body.

3. The improvement in a fluid accumulator having a body, a diaphragm in said body, said diaphragm attached to said body dividing said body into two fluid compartments, comprising, a stop member in said body on one side of said diaphragm, a guide rod one end of which is secured adjacent one end of the body, said guide rod passing through said diaphragm and the second end of said guide rod positioned adjacent said stop member, a

plate secured to said diaphragm, and a guide sleeve secured to said plate and sealingly slidable on said guide rod, a tubular support member between said stop member and the second end of said body adapted to guide and enclose said guide sleeve as it is moved into said support member.

4. A fluid accumulator comprising a body, a stop member in said body, a diaphragm in said body on one side of said stop member and attached to said body approximately equal distance between said stop member and the first end of said body, a guide rod secured to said first end of said body and passing through said diaphragm and extending adjacent said stop member, a sleeve closed at one end slidable on said rod, a guide attached to said sleeve and secured to said diaphragm, and a guide tube axially aligned with said sleeve and secured between said stop member and the second end of said body adapted to slidably receive and guide said sleeve.

5. The improvement in a pressure accumulator having a body and a flexible partition in and secured to said body comprising, a stop member in said body on one side of the partition, a guide rod secured to said first end of said body and passing through said flexible partition, and extending adjacent said stop member, said stop member spaced from said second end of the body, a sleeve closed at one end slidable on said rod, a plate attached to said sleeve and secured to said flexible partition, and a guide tube axially aligned with said sleeve and secured between said stop member and the second end of said body for slidably receiving and supporting said sleeve.

References Cited in the file of this patent

UNITED STATES PATENTS

2,809,665 Crowe ..... Oct. 15, 1957